Feb. 16, 1965 F. HAMMOND ETAL 3,169,816

ELECTRICAL CONNECTOR

Filed Jan. 28, 1963

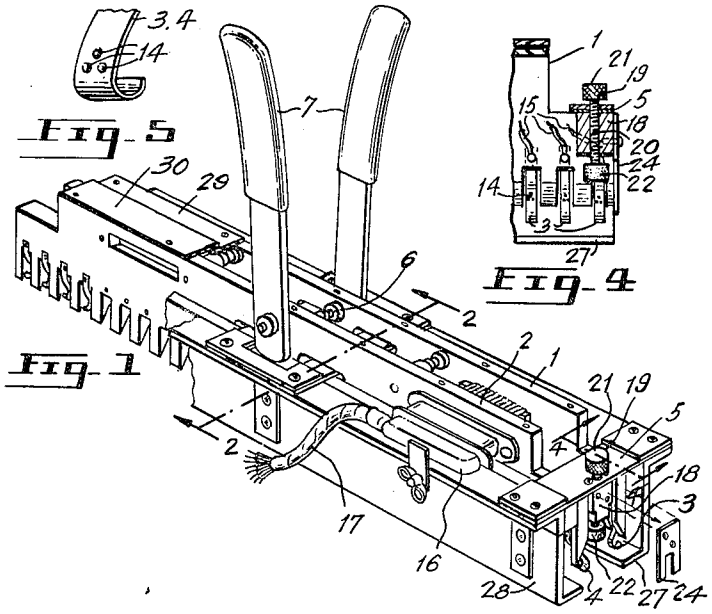

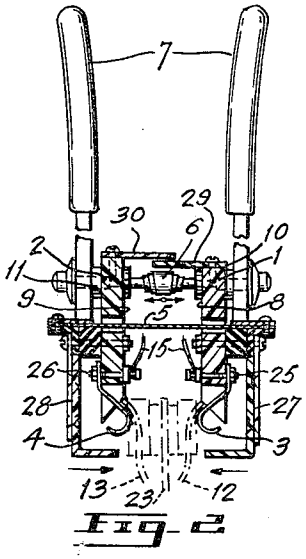

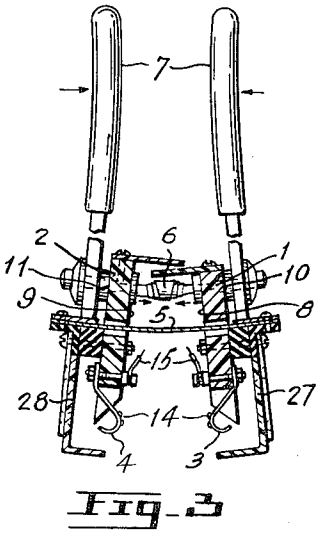

INVENTORS

Frank HAMMOND
Ernest F. ROBIN
Pierre GAUTHIER

Chas. D. Murphy

AGENT

United States Patent Office

3,169,816

Patented Feb. 16, 1965

1

3,169,816

ELECTRICAL CONNECTOR

Frank Hammond, Terrebonne, Quebec, Ernest F. Robin, Montreal, Quebec, and Pierre Gauthier, Chateauguay, Quebec, Canada, assignors to Northern Electric Company Limited, Montreal, Quebec, Canada

Filed Jan. 28, 1963, Ser. No. 254,077
9 Claims. (Cl. 339—110)

This invention relates to an electrical connector which is particularly adaptable for making temporary test connections.

In the telephone industry it is common practice to insert protective devices at critical points along a telephone line between the outside plant and the central office. Protector blocks, connected across the line, guard against excessive line voltages. By construction the protector blocks provide points suitable for ready connection to pairs of test set leads, used for checking circuit continuity.

The industry has long had need for a connector which could readily make simultaneous connection of a multiplicity of perhaps 50 pairs of test connections to protector blocks.

Protector blocks normally consist of a small piece of carbon mounted in a porcelain block having a channel along its length on one side. The protector blocks, in turn, are mounted on a terminal block. A flat metallic spring, integral with the terminal block, fits into the channel in the protector block thus holding it in position. The spring furthermore provides the electrical connection between the carbon, which protrudes into the channel, and the line. The protector blocks are mounted in pairs along the length of the terminal block.

There has been a problem facing the industry in finding a satisfactory means, having facility of operation, for firmly connecting the leads to the protector block springs.

Prior to applicants' invention it was well known to use a device whereby several pairs of spaced contacts, of a resilient metal were spread, upon forced contact with the protector block springs, to engage the springs. Since each pair of contacts had to be individually spread apart when forced against the corresponding pair of springs, the limitations of the device depended upon the collective spreading force required for the several contact pairs. A known connector of this type had, for example, a maximum of about 10 contact pairs.

Applicants have discovered that by utilizing a spring controlled pivoting action an electrical connector is provided which permits the connection of a much greater number of contacts, thereby overcoming the main disadvantage prevalent in the prior art proposals. The pivoting action is manually initiated to spread the contacts. Once the contacts are in spread condition and the connector is placed adjacent the protector block springs, the manual control is released and the contacts assume their normal position to make contact with the springs.

The electrical connector according to applicants' invention comprises a pair of supporting members each carrying at least one electrical contact, the members being connected by a resilient means which acts as a common pivot therefor. Two contact spacing means are provided, the first acting resiliently on the members to pivot them about the resilient means in a direction such that the contacts are brought toward each other; and the second contact spacing means being arranged so as when operated to act on the members to draw the contacts apart. The resilient means has a second function in that it opposes the action of the first contact spacing means to limit the degree to which the latter can force the contacts toward each other.

2

Another advantage of the connector according to the present invention is that it may be used to simultaneously test circuits which are protected by different sized protector blocks. This is accomplished by mounting at both ends of the device stop members which may be individually adjusted to allow different depths of penetration between the contacts. Furthermore, the contacts, as well as being made of a resilient metal, are individually mounted to permit connection to blocks of different thicknesses.

Preferred embodiments of the invention will now be described, by way of example, with reference to the accompanying drawings. The same referenced designations will be used for similar parts in each figure of the drawings, in which:

FIGURE 1 is a perspective view of the preferred embodiment of a multiple-contact-pair electrical connector in its normal condition;

FIGURE 2 is a sectional view through line 2—2 of FIG. 1 showing a single contact pair in the normal connected position with a pair of protector blocks and associated springs (outlined only);

FIGURE 3 is a sectional view of the electrical connector through the same section as FIG. 2, showing the connector in the spread contact position.

FIGURE 4 is a sectional view through line 4—4 of FIG. 1 illustrating, in particular, the details of the adjustable stop member; and

FIGURE 5 is an expanded perspective view of a single contact, illustrating a typical configuration of metallic projections.

The basic principles of the connector can be most readily appreciated by referring to FIGS. 2 and 3 of the drawings. Two supporting members 1, 2, are shown, each member bearing at its lower extremity a contact 3, 4, respectively. A resilient means shown as a plate 5 is provided to prevent the members 1, 2 from meeting at their lower extremities and also to act as a common pivot for the members 1, 2. A first contact spacing means shown as a volute spring 6 urges the lower extremities of the members 1, 2 (and thus the contacts 4, 5) toward each other. The plate 5 and spring 6 furthermore unify the device. A second contact spacing means shown as a pair of handles 7, one handle being affixed to each of the members 1, 2, is arranged, when actuated, to move the contacts 3, 4 apart by a pivoting action about the plate 5.

The members 1, 2 are made of an insulating material (e.g. plastic) and are arranged in a substantially parallel, face-to-face relationship. The plate 5 is made of flexible material, preferably spring steel, and is substantially rectangular in shape. The plate 5 is rigidly affixed to the members 1, 2 and extends between the inner faces 8, 9 respectively thereof, somewhat above the point of mounting of the contacts 3, 4 and approximately intermediate of the height of the members. The ends of the spring 6 are affixed to the inner surfaces 8, 9 of the members 1, 2 respectively at a point above the plate 5 near the tops of the members so that the plate 5 and the spring 6 are substantially parallel.

The spring 6 is preferably of the volute type particularly because of the inherent high retention of resiliency and also since, by construction, a volute spring offers maximum safety to an operator when the spring is under pressure. If a coil spring were used a shield would be required to overcome the hazard to the operator caused by the open spacing of the coil turns.

One of the handles 7 is mounted on each outer face 10, 11 of the members 1, 2 respectively near their tops in axial alignment with the spring 6.

The spring 6 is in compression at all times, conse-

quently exerting an outward force on the upper portion of the members 1, 2. The members are thereby pivoted about the plate 5, and the contacts 3, 4 tend to be moved together. However, the spring 6 in addition to causing a pivoting action about the plate 5, exerts a tensile force on the plate and once the resiliency of the plate 5 has been overcome the plate becomes substantially rigid and impedes further pivoting action thus preventing the contacts 3, 4 from closing to a touching position.

The handles 7 are arranged on the members 1, 2 at a position to produce optimum pivoting of the members about the plate 5 in a direction opposite that effected by the spring 6 when pressure is applied to the handles. When the handles 7 are drawn together the spring 6 is placed in further compression and the members 1, 2 are pivoted about the plate 5 in a direction opposite that effected by the spring 6 under normal conditions. Consequently, the contacts 3, 4 are spread apart, the spacing between contacts now being greater than the maximum distance between the engaging portions of the protector block springs with which the device is to make connection. With the handles drawn together the connector is placed in juxtaposition with the protector block springs, the handles 7 are released and the spring 6 expands, pivoting the members 1, 2 until the contacs 3, 4 have assumed proper elecrical contact with the springs and the device retains this position with little or no external guidance.

FIGURE 2 illustrates the connector in its normal connected position with the contacts 3, 4 connected with the protector block springs 12, 13 respectively (in dotted outline form). FIGURE 3 illustrates the connector in its spread contact position, there being an external force applied to the handles pushing them inwardly. If the force were to be released the contacts 3, 4 would assume a final position slightly closer together than in the case where they are connected with the protector block springs 12, 13. This natural tendency of the connector to close the contacts to a slightly greater extent than when they are in the connected position provides a force which holds the connector in the connected position. The connection is aided by one or more metallic projections 14 on each of the contacts 3, 4 (FIG. 5) which make contact with the protector block springs, thus reducing slippage to a minimum.

Each contact 3, 4 is electrically connected by wire 15 to a connection, shown as a commercial plug-in-type connector 16 (FIG. 1), which is cabled 17 to the required test set.

The preferred embodiment of the connector is illustrated in FIG. 1 which essentially shows a multiple of the connectors described with reference to FIGS. 2 and 3.

In FIG. 1 the members 1, 2 are elongated and each carries along its length a plurality of evenly spaced contacts 3, 4 to provide a series of oposing contacts. In practice the maximum number of contacts carried by each member 1, 2 could be as many as 50.

Several plates 5 and springs 6 are located in a symmetrical fashion along the length of the members 1, 2 in order to provide a multiple effect of a single plate 5 and spring 6 and to make the device rigid. The handles 7 are pivotally mounted centrally of the length of the members 1, 2. When not in use the handles 7 are rotated to a position approximately flush with the top of and parallel to the length of the members 1, 2. An abutting means is suspended downwardly from each end plate 5. Each abutting means comprises a solid block 18 preferably of an insulating material and depends from the end plate 5 between the lower extremities of the members 1, 2. Each block 18 is of such a width that as the members 1, 2 pivot under the action of the springs 6 they abut the blocks, maintaining the contacts 3, 4 a predetermined minimum distance apart. This minimum distance is less than the distance between the contacts 3, 4 when they are in engagement with the protector block springs 12 and 13 as shown in FIG. 2.

An adjustable stop 19 is located at either end of the connectors. Each stop 19 comprises a threaded shaft 20 (FIG. 4) which engages a threaded bore in the abutting block 18 and in the end plate 5. The stop 19 has attached thereto at one end an adjusting knob 21 which protrudes above the end plate 5 and a stop-knob 22 which extends downwardly between the contacts 3, 4. The stop-knob 22 is adapted to bear on the portion 23 of the protector blocks between the springs 12 and 13 (FIG. 2) to control the penetration of the blocks between the members 1, 2 of the connector and thereby the position of the contacts 3, 4 along the lengths of the springs 12 and 13. Furthermore, the two adjustable stops 19 may be adjusted independently of one another. It is often the case that the protector blocks 23 vary in size along the length of the terminal strip. Consequently, for one set of measurements the requirement exists that the protector blocks must penetrate the connector to different extents along the length of the connector to ensure proper electrical contact at each spring. A certain degree of adjustability may be effected by adjusting the stop-knobs 22 at either end of the device to different positions thus allowing for a graduated depth of penetration of the blocks along the length of the connector.

A tooth-like member 24 is situated at one extreme end of the connector rigidly affixed to the abutting means 18 at that end, the member 24 extending downwardly beyond the lowermost point of the contacts 3, 4.

As the connector is placed, in its spread contact condition, in juxtaposition with a series of protector blocks along the terminal strip, the tooth-like member 24 is placed in sliding engagement with the free surface of the end-most protector block. Because of the predetermined spacing between the member 24 and the adjacent opposing contacts 3, 4 and the uniform spacing between successive contact pairs, the connector is provided with a point of reference longitudinally thereof. Consequently when the external force is released from the handles 7 and the connector is allowed to assume its normal condition in contact with the protector block springs, each pair of opposing contacts 3, 4 are in position to assume a satisfactory electrical connection with the corresponding pair of protector block springs. To further ensure satisfactory connection, the contacts 3, 4 are individually mounted at 25, 26 respectively (see FIG. 2) and are formed of a resilient metal. These features effect satisfactory connection regardless of normal variations in depth of protector block or spring dimensions.

In FIG. 1 the tooth-like member 24 has been removed from its actual position affixed to the block 18 for the sake of clarity. In FIG. 4 the member 24 is shown in its actual position. This sectional view also serves the purpose of more lucidly illustrating the structure and position of the block 18 and the adjustable stop 19.

Additional features of the preferred embodiment of the connector are evident in FIG. 1. These features include two pairs of transparent shields one pair being affixed to each of the side and top of the members 1, 2. These shields are provided both to protect the operator of the connector from the moving parts thereof, and to prevent any appreciable amount of extraneous matter from entering the connector and thus impairing its operation.

The side shields 27, 28 are L shaped in cross section, extending downwardly from the members 1, 2 respectively and inwardly slightly below the bottom of the contacts 3, 4 to form, in effect, an incomplete encasement of the contacts. The shields 27, 28 are flexibly attached to the members 1, 2 respectively to prevent interference with the protector blocks while the connection is being made.

The top shields 29, 30 affixed to the members 1, 2 respectively, each extend partially across the top of the device and overlap, shield 30 extending above shield 29. When the members 1, 2 are pivoted under the section of the handles 7 shield 30 overrides shield 29.

Thus, according to applicants' invention, an electrical

connector has been provided that can be used advantageously to make a multiplicity of temporary test connections.

What is claimed is:

1. An electrical connector comprising a pair of supporting members, an electrical contact carried by each supporting member, resilient means providing a common pivot for the members; first contact spacing means spaced from said resilient means and acting resiliently on the members to pivot them about the resilient means in a manner to move the contacts together; the resilient means being in opposition to the first contact spacing means to limit the degree to which the latter moves the contacts together; and a second contact spacing means arranged to act on the members and operable to pivot them in a manner to move the contacts apart.

2. An electrical connector as defined in claim 1 wherein the resilient means is a flexible plate bridging the members; and the first contact spacing means is a compression spring mounted between the supporting members on the opposite side of the plate from the contacts; the spring and the plate being arranged to provide mutual co-action so that the spring is in compression at all times.

3. An electrical connector as defined in claim 2 wherein the spring is of the volute type and the plate is spring steel, substantially uniform in thickness.

4. An electrical connector as defined in claim 2 wherein the second contact spacing means comprises a pair of handles mounted on the supporting members on the same side of the plate as the compression spring and adapted to be moved together to spread the contacts.

5. An electrical connector as defined in claim 2 including an abutment secured to the plate and interposed between the supporting members on the same side of the plate as the contacts to prevent movement of the members beyond a predetermined minimum spacing of the contacts.

6. An electrical connector as defined in claim 2 including an elongated stop member mounted on the plate, the stop member being adjustably movable in a direction at right angles to the plane of the plate between the plate and the contacts.

7. An electrical connector as defined in claim 2 wherein at least one projection is formed on the surface of each contact at the point of electrical connection.

8. An electrical connector comprising a pair of elongated supporting members, a plurality of evenly spaced contacts carried by each supporting member along its length to provide a series of opposing contacts; at least two flexible plates of substantially uniform thickness, one at each extremity of the connector, the plates bridging the supporting members to provide a common pivot for the supporting members; at least one compression spring acting between the supporting members on the opposite side of the plate from the contacts to pivot them in a manner to urge the opposing contacts together, the spring and the plates being arranged to provide mutual co-action so that the spring is in compression at all times; means arranged to act on the supporting members to place the spring in further compression and pivot the members about the flexible plates in a manner to move the opposing contacts apart; an abutment secured to the plates at either end of the connector on the same side of the plate as the contacts and interposed between the supporting members to prevent movement of the members beyond a predetermined minimum spacing of the contacts; and elongated stop members mounted on the plate at each extremity of the connector, each stop member being adjustably movable in a direction at right angles to the plane of the plate between the plate and the contacts.

9. An electrical connector as defined in claim 8 wherein each contact is individually mounted and has at least one projection formed on the surface thereof at the point of electrical connection.

References Cited by the Examiner

UNITED STATES PATENTS

1,923,901	8/33	Winkie	339—74
2,103,891	12/37	Brown	339—108
2,261,761	11/41	Hanson et al.	339—255 X
2,428,057	9/47	Wilburn	339—255 X
2,445,981	7/48	Von Voigtlander	339—74
2,928,067	3/60	Broberg et al.	339—200

JOSEPH D. SEERS, *Primary Examiner.*