Dec. 22, 1964 H. HORNSCHUCH ETAL 3,161,900

VACUUM CLEANING HEAD

Filed Feb. 14, 1962 2 Sheets-Sheet 1

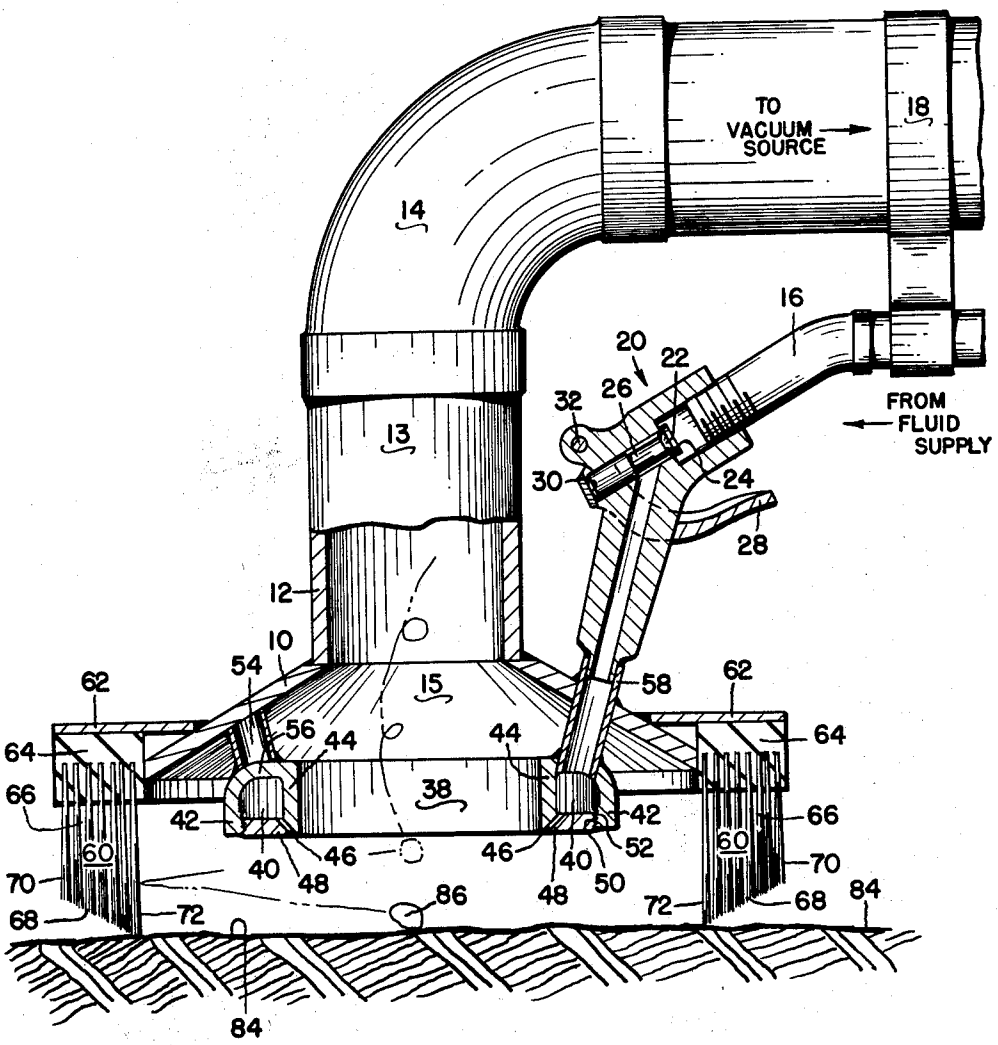

FIG. 1

INVENTORS
HANNS HORNSCHUCH
JACK R. WEBB
BY
THEIR ATTORNEY

Dec. 22, 1964 H. HORNSCHUCH ETAL 3,161,900

VACUUM CLEANING HEAD

Filed Feb. 14, 1962 2 Sheets-Sheet 2

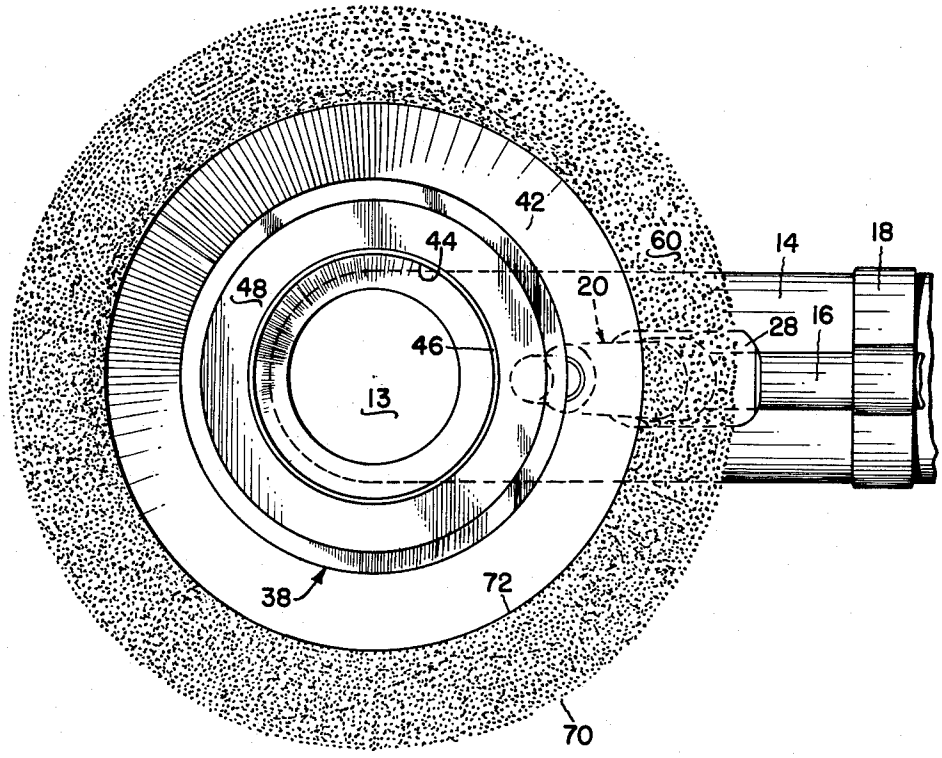

FIG. 2

INVENTORS
HANNS HORNSCHUCH
JACK R. WEBB
BY
THEIR ATTORNEY

United States Patent Office

3,161,900

Patented Dec. 22, 1964

1

3,161,900
VACUUM CLEANING HEAD

Hanns Hornschuch, Easton, and Jack R. Webb, Bethlehem, Pa., assignors to Ingersoll-Rand Company, New York, N.Y., a corporation of New Jersey

Filed Feb. 14, 1962, Ser. No. 173,299
3 Claims. (Cl. 15—345)

This invention relates to mining apparatus and more particularly to an improved cleaning head for mining apparatus.

Heretofore it has been known in the mining and drilling art, that valuable dust and ore containing rocks and pebbles are found within the proximity of mine shafts and drilling sites. In order to collect the dust and ore containing rocks, hand brushes and shovels were heretofore used to collect this material. The utilization of this particular manual method of recovering the dust and rocks, however, caused several problems, such as raising deleterious clouds of dust in the general area of the recovery operation which clouds of dust were injurious to the laborers. In addition this manual method is time consuming and expensive from the labor standpoint.

In order to overcome the dust raising problem, water would be sprinkled in the recovery area, resulting however, in greater difficulty in brushing the dust and rocks together for collection. Furthermore the dust problem was not entirely solved unless the entire area was saturated with water. This of course increased the time consumed in recovering dust and rocks.

In the art of abrading devices there has been known, devices as shown in U.S. Patent No. 2,483,176 issued September 27, 1949 to Lewis H. Bishop and John Stanley Finn and U.S. Patent No. 2,494,773 issued January 17, 1950 to W. H. Mead et al., wherein abrasive material is impelled against a working area by a strong pressure blast and is then removed from the working area along with the abraded particles by a suction current, for collection in a receptacle. Both devices project the abrasive containing strong pressure blast perpendicularly and outwardly from the center of the blast against the surface to be abrased and thereafter, by a strong vacuum, suck the abrasive and abraded material from the cleaned surface.

Although the above mentioned surface treating devices are satisfactory for picking up the fine abrasive and abraded material from the treated surface, they are found to be inadequate for the purpose of clearing an area which contains larger objects such as ore containing pebbles and rocks. As a result, should an attempt be made to apply these devices for cleaning and recovering the valuable dust, pebbles and rocks from areas surrounding mine shafts and drilling sites, a reversion to the hand brush and shovel would be necessary to satisfactorily clean the area, thus reviving the problems attending the use of the hand brush and shovel.

It is the general object of the present invention to avoid and overcome the foregoing and other difficulties and objections to prior art practices by the provision of an improved cleaning device which is operable to impart a velocity to objects heavier than dust so that they may be collected by an integral vacuum device.

Another object of the present invention is the provision of an improved cleaning device for first removing dust from the area to be cleaned.

Still another object of the present invention is the provision of an improved cleaning device for removing dust without raising clouds of dust while the cleaning operation is in progress.

Yet another object of the present invention is the provision of an improved cleaning device for cleaning dust and heavier objects from crevices and corners on the surface to be cleaned.

2

A further object of the present invention is to provide an improved cleaning device which confines the fluid blast for picking up material heavier than dust, to a defined area.

The aforesaid objects of the present invention, and other objects which will become apparent as the description proceeds, are achieved by providing a hollow frame means to which is attached a suction means and a high pressure fluid means. A valve is disposed in the high pressure fluid means to control the flow of high pressure fluid to a high pressure fluid distribution means which is connected to the hollow frame means. The high pressure fluid distribution means distributes the high pressure fluid at an angle relative to the surface to be cleaned, thereby imparting a motion to objects on that surface. An air pervious skirt means is connected to the frame to define an area of the surface to be cleaned and to confine the high pressure fluid.

For a better understanding of the present invention reference should be had to the accompanying drawings, wherein like numerals of reference indicate similar parts throughout the several views and wherein:

FIGURE 1 is a vertical sectional view of the improved cleaning device of the present invention; and

FIGURE 2 is a bottom view of the improved cleaning device.

Although the principles of the present invention are broadly applicable to mining apparatus for clearing an area in the proximity of mine shafts and drilling sites, the present invention is particularly suited for clearing or picking up objects and other material, larger in size and weight than dust particles, and hence it has been so illustrated and will be so described.

With specific reference to the form of the present invention illustrated in the drawings, and referring particularly to FIGURE 1 a frame means or vacuum cleaner head frame is indicated generally by the reference numeral **10**. In order to provide for the attachment of a vacuum hose **14** of a suction means to the frame **10**, a cylindrical portion **12** is provided on the frame. The vacuum hose **14**, connected to any suitable source of suction, is secured to the cylindrical portion **12** in a manner such as to provide a leak-proof connection between the hose **14** and the frame **10**.

For the purpose of delivering a high pressure fluid blast such as air to the frame **10**, a high pressure fluid hose **16** of a high pressure fluid means is also provided and may be secured to the vacuum hose **14** by means of a suitable fastening device **18**. The vacuum hose **14** and the high pressure fluid hose **16** are fastened together to allow the operator to use the vacuum cleaning device in such a manner that he will not have to give any thought to the tangling of the two hose lines. This will further allow the operator to use one hand to manipulate the vacuum head frame **10** thereby performing the necessary cleaning operations, as will later be described.

The high pressure fluid hose **16** is connected to a valve generally indicated as **20** wherein is provided a valve member such as a valve stem head **22**, which abuts a valve seat **24**. A valve stem **26** is connected to the valve stem head **22** thereby forming one integral unit. One convenient way of allowing the passage of high pressure fluid through the valve **20**, is to unseat the valve stem head **22** from the valve seat **24** by raising or moving counterclockwise (FIGURE 1) the trigger **28**. Integral with the trigger mechanism is a cam surface **30** which, when the trigger **28** is raised, the trigger **28** pivots counterclockwise (FIGURE 1) about the pin **32** causing the valve stem **26** and valve stem head **22** to move upwardly thereby unseating the valve stem head **22** from the valve seat **24**. When the valve stem head **22** is unseated, the high pressure fluid is permitted to pass through the valve

20. It is to be understood that any suitable valve may be used and that this above described valve 20 forms no part of this invention.

The structure of the frame 10 is opened at both ends in order to allow the passage of fluid therethrough. The upper open end 13 (as viewed in FIGURE 1) accommodates the vacuum hose 14 and the lower open end 15 of the frame 10 faces the area or surface to be cleaned.

To provide for the distribution of the high pressure fluid, a high pressure fluid distribution means 38 is disposed beneath the lower open end 15 of the frame 10 and is secured thereto. The high pressure fluid distribution means 38 comprises a continuous chamber 40 enclosed by side walls 42, 44 and has a continuous channel opening 46 between the inner wall 44 and a lower wall 48. The continuous channel opening 46 leads downwardly from the continuous chamber 40 and toward the center of the frame 10, allowing the high pressure fluid to be emitted from the continuous chamber 40 at an angle relative to the surface to be cleaned. This continuous channel 40 provides a means for distributing the high pressure fluid, from the high pressure fluid distributing means 38, to the surface to be cleaned at such an angle so that motion is imparted to objects heavier than dust particles, and thereby allowing these objects to be sucked up by the vacuum provided by the vacuum hose 14.

In order to vary the amount of high pressure fluid impinging on the surface to be cleaned, a washerlike lower wall 48 (as viewed in FIGURE 1) of the high pressure fluid distributing means 38 may be made so that it is adjustable, as by threading external threads 50 on the lower wall 48 into an inner threaded portion 52 of the outer wall 42 of the continuous chamber 40. By varying the position of the lower wall 48 relative to the side walls 42, 44, the size of a fluid directing means, such as a continuous channel 46, leading from the continuous chamber 40 to the center of the frame, may be varied.

The fluid distributing means 38 is secured to the frame 10 by means of a supporting rod 54 which may be welded or fastened in any suitable manner to the frame 10 and to the upper wall 56 of the continuous chamber 40.

A nozzle 58 is utilized to supply the high pressure fluid from the valve 20 to the high pressure fluid distributing means 38. The nozzle 58 extends from the valve 20 through the frame 10 and into the continuous chamber 40 through the upper wall 56. This nozzle 58 may be secured to the frame 10 and upper wall 56 of the continuous chamber 40 in any suitable manner, such as by welding. The combination of the supporting rod 54 and the nozzle 58 secures the high pressure fluid distributing means 38 in its proper relationship to the frame 10, so that the high pressure fluid distributing means 38 is held in a fixed position.

It is desirable to define the area to be cleaned, and to prevent the raising of dust when the high pressure fluid blast is applied, to this end an air pervious skirt means, herein after called a brush 60, is provided which is secured to a radial flange 62 of the frame 10. The air pervious skirt means however, is not limited to a brush, since it may take the form of sponge rubber, a maze or fabric curtains, rubber fingers or the like. The radial flange 62 may be an integral part of the frame 10 or a separate portion which may be fixed to the frame 10. The brush 60 is provided with a stiff backing 64, such as a metal or plastic, which stiff backing is secured in any suitable manner to the radial flange 62. The bristles 66 of the brush 60 extend downwardly. The brush 60 is tapered as at 68 from its outer periphery 70 to the inner periphery 72 in order to be more flexible than a standard flat bottom brush, thereby providing a better action around obstacles.

The general shape of the brush 60 will depend upon the shape of the frame 10 itself. Although a circular frame 10 is here illustrated (FIGURE 2) other shapes may be used, such as square, rectangular, or triangular. Correspondingly the shape of the brush 60 will define the area to be cleaned on the surface. The general shape of the frame 10 will also dictate the shape of the high pressure fluid distributing means 38 which is disposed within the confines of the area defined by the brush 60 as well as the frame 10. Consequently the brush 60 and the high pressure fluid distributing means 38 will take the same general shape as the frame 10 itself.

Although it is believed that the operation of the apparatus will be apparent from the foregoing description, a brief review of such operation will now be made for purposes of summary and simplification.

Operation

With the preferred construction seen in FIGURES 1 and 2 the suction device is turned on in any suitable manner and by any suitable means available to those skilled in the art.

For normal operation the unit operates as a vacuum brush which may be placed directly on a surface 84 to be cleaned or slightly above the surface thereby allowing the dust particles to be sucked from the surface 84, through the center of the frame 10 and into the vacuum hose 14. When the brush 60 is in contact with the surface to be cleaned, the inner periphery 72 of the brush 60 defines the area in which the dust particles will be removed. However a larger area may be cleaned if the vacuum head 10 and brush 60 is held slightly above the surface 84 since the light dust particles will be caught up in a stream created by the suction device. For the removal of larger objects, such as large particles, however, it has been found that these suction devices do not have sufficient strength to lift the larger particles from a rest position. It has been found that if a random velocity were to be imparted to the heavier particles, such as the rock 86, the suction of the vacuum hose 14 will be sufficient to suck the heavier particles into the vacuum hose 14 thereby removing them from the defined area. For this reason the high presure fluid blast is provided. With the brush 60 held against the surface to be cleaned, the trigger 28 may be actuated by the operator thereby allowing the blast of high pressure fluid to be directed against the surface 84 to be cleaned by high pressure distribution means 38. Since the continuous channel 46 directs the high pressure fluid blasts at an angle relative to the surface to be cleaned, the blast imparts a motion to the heavier rock 86. The angularly directed high pressure fluid blast agitates the heavier rock 86 thereby giving it a velocity and allowing the vacuum hose 14 to suck the heavier rock 86 up through the frame 10.

As seen in FIGURE 1, the rock 86 may describe the path indicated by the dotted lines. The angularly impinging fluid blast imparts to the rock 86 a random motion which has an upward component of velocity. The combination of the suction provided by the suction means 14 and the upward component of motion of the rock 86 allows the rock to be sucked into the suction hose and thereby removed from the surface 84. The brush 60 provides a screen through which these heavier particles will not be projected and will also confine the jet blast so that the dust in the surrounding area is not kicked up or raised. Therefore the brush 60 provides a shield which keeps the rock 86 from being thrown out by its own momentum when the fluid blast is applied and further provides a restriction to the incoming air. This jet of high pressure fluid is actuated while the vacuum device is still in operation. The ratio of the incoming air to the high pressure fluid is in the order of 4:1. This provides a net inflow of air and eliminates blowing dust outside the brush 60 in all cases except where the brush 60 is lifted more than a slight amount away from the surface to be cleaned. For this reason the high pressure blast is turned off when the brush 60 is removed from the surface 84. It will be noted that the vacuum will

not cause any dust problem. It is the high pressure blast of fluid which causes the dust problem and this problem is eliminated when the brush **60** is held against the surface to be cleaned.

It will be recognized by those skilled in the art that the objects of the present invention have been achieved by the provision of an improved cleaning head for cleaning an area and freeing it from the dust and heavier objects without the previous attendant problems of raising dust and consuming a great deal of time in the necessary cleaning of the surrounding areas.

Yet another embodiment of this invention would make the high pressure fluid distribution means **38** integral with the frame **10** either above or below the frame **10**.

While in accordance with the patent statutes a preferred embodiment of the present invention has been illustrated and described in detail. It is to be particularly understood this invention is not limited thereto or thereby.

We claim:

1. A hand operated cleaning device for removing dust particles and other objects heavier than dust from an area of a surface, said device comprising:

(*a*) a hollow frame having a narrow upper end and a wide lower end;

(*b*) a suction hose secured to the upper end of said hollow frame;

(*c*) high pressure fluid means communicating with the lower end of said hollow frame for delivering fluid under pressure to said hollow frame;

(*d*) a valve disposed in said high pressure fluid means for controlling the flow of high pressure fluid to the frame;

(*e*) high pressure fluid distribution means communicating with said high pressure fluid means suspended beneath and inside the lower end of said hollow frame and being provided with a continuous chamber for receiving said fluid under pressure from said valve;

(1) said continuous chamber being circular in shape and being provided with a continuous channel disposed at an angle relative to said surface for distributing said fluid at an angle relative to said surface;

(*f*) means for varying the size of said continuous channel allowing the amount of said fluid impinging on said surface to be varied; and

(1) said means comprising an annular ring adjustably connected to the outer lower peripheral edge of said channel, but variably spaced from the inner peripheral edge of said channel, and

(*g*) air pervious skirt means connected to the lower end of said frame defining said area of the surface to be cleaned and confining the flow of high pressure fluid.

2. A hand operated cleaning device for removing dust particles and other objects heavier than dust from an area of a surface, said device comprising:

(*a*) a hollow frame having a narrow upper end and a wide lower end;

(*b*) a suction hose connected to the upper end of said hollow frame;

(*c*) a high pressure hose communicating with the lower end of said hollow frame for delivering fluid under pressure to said hollow frame;

(*d*) a valve disposed within said high pressure hose for controlling the flow of high pressure fluid to the frame;

(*e*) high pressure fluid distribution means suspended beneath and inside the lower end of said hollow frame and being provided with a continuous chamber for receiving said fluid under pressure from said valve;

(1) said continuous chamber being circular in shape and being provided with a continuous channel disposed at an angle relative to said surface for distributing said fluid at an angle relative to said surface;

(*f*) means for varying the size of said continuous channel allowing the amount of said fluid impinging on said surface to be varied;

(1) said means for varying the size of said continuous channel being in the form of a threadably mounted bottom wall of said high pressure fluid distribution means; and

(*g*) a circular brush connected to the lower end of said frame for contacting said surface defining said area of the surface to be cleaned and confining the flow of high pressure fluid.

3. A hand operated cleaning device for removing dust particles and other objects heavier than dust from an area of a surface, said device comprising:

(*a*) a hollow frame having a narrow upper end and a wide lower end;

(*b*) a suction hose connected to the upper end of said hollow frame;

(*c*) a high pressure hose communicating with the lower end of said hollow frame for delivering fluid under pressure to said hollow frame;

(*d*) a valve disposed within said high pressure hose for controlling the flow of high pressure fluid to the frame;

(*e*) high pressure fluid distribution means suspended beneath and inside the lower end of said hollow frame and being provided with a continuous chamber for receiving said fluid under pressure from said valve;

(1) said continuous chamber being circular in shape and being provided with a continuous channel disposed at an angle relative to said surface for distributing said fluid at an angle relative to said surface;

(*f*) means for varying the size of said continuous channel allowing the amount of said fluid impinging on said surface to be varied;

(1) said means for varying the size of said continuous channel being in the form of a threadably mounted bottom wall of said high pressure fluid distribution means; and

(*g*) a circular brush connected to the lower end of said frame for contacting said surface defining said area of the surface to be cleaned and confining the flow of high pressure fluid;

(1) said circular brush having bristles which are tapered so that the brush may be flexible at the point of contact with the surface.

References Cited by the Examiner

UNITED STATES PATENTS

695,162	3/02	Lotz	15—345
789,768	5/05	Sullivan	15—345
986,245	3/11	Thurman	15—415
1,633,598	6/27	McClatchie	15—415
2,351,507	6/44	Hallock	15—415
2,740,153	4/56	Bishop	15—415
2,914,790	12/59	Warburton	15—415 X

FOREIGN PATENTS

3,134	2/92	Great Britain.
6,405	3/04	Great Britain.
10,796	5/11	Great Britain.
198,780	6/23	Great Britain.

WALTER A. SCHEEL, *Primary Examiner.*

CHARLES A. WILLMUTH, *Examiner.*