Nov. 17, 1964 F. S. HAYWARD ETAL 3,157,013

ADJUSTABLE SPUR FOR HORSEMEN

Filed Aug. 8, 1963

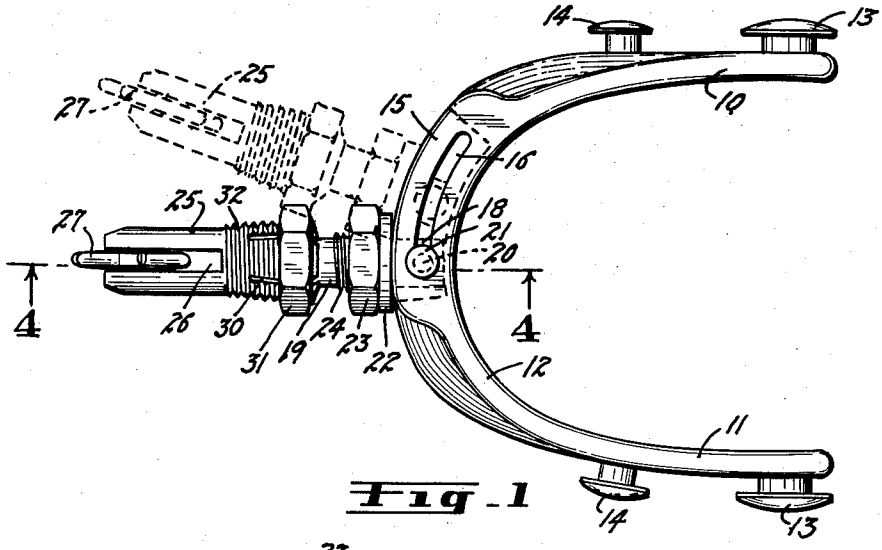

Fig. 1

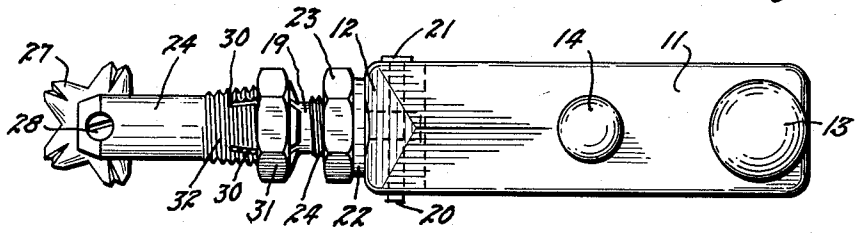

Fig. 2

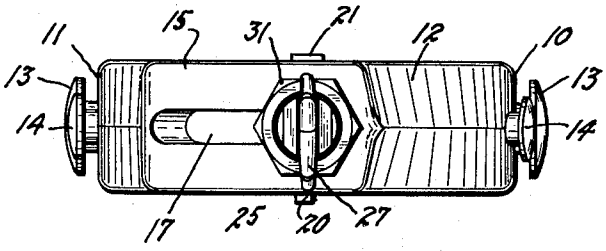

Fig. 3

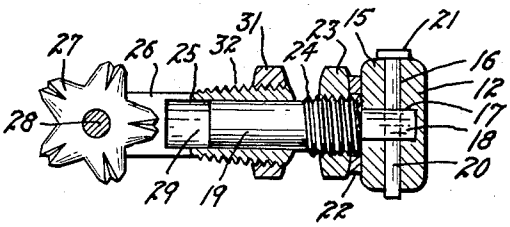

Fig. 4

INVENTORS
FRANK S. Hayward
ARTHUR S. McCann
BY
ATTORNEY

United States Patent Office

3,157,013

Patented Nov. 17, 1964

1

3,157,013

ADJUSTABLE SPUR FOR HORSEMEN

Frank S. Hayward, 7590 W. 29th Ave., Denver, Colo., and Arthur S. McCann, 129 N. 14th St., Colorado Springs, Colo.

Filed Aug. 8, 1963, Ser. No. 300,799
4 Claims. (Cl. 54—83)

This invention relates to a horseman's spur and has for its principal object the provision of a horseman's spur which can be readily adjusted to suit the individual preferences of the rider.

A further object is to provide a spur in which the direction of projection of the rowel shank of the spur can be adjusted and preset at any desired angle.

A still further object is to provide a spur in which the rowel shank can be adjusted to and locked at, any desired length.

Other objects and advantages reside in the detail construction of the invention, which is designed for simplicity, economy, and efficiency. These will become more apparent from the following description.

In the following detailed description of the invention, reference is had to the accompanying drawing which forms a part hereof. Like numerals refer to like parts in all views of the drawing and throughout the description.

In the drawing:

FIG. 1 is a top view of the improved adjustable spur of this invention;

FIG. 2 is a side elevational view thereof;

FIG. 3 is a rear end view thereof; and

FIG. 4 is a cross section, taken on the line 4—4, FIG. 1.

The improved spur comprises a U-shaped heel yoke having two relatively straight, parallel side portions **10** and **11** and an arcuate rear portion **12**. The side portions are provided with, forward, headed strap studs **13** and with rear headed strap studs **14** to receive the conventional heel and foot straps for attaching the spur to the boot of the rider.

The arcuate rear portion **12** is formed with a relatively thick arcuate boss **15** extending arculately from the axis of the spur to one side thereof. The boss **15** is formed with a vertical arcuate slot **16** extending entirely therethrough and following the circumferential contour of the boss. A relatively narrow horizontal slot **17** enters the vertical slot **16** from the rear. The horizontal slot is positioned midway between the top and bottom of the boss **15** and extends throughout the length of the vertical slot **16**.

A flattened forward extremity **18** of the cylindrical rowel shank **19** extends into the horizontal slot **17** and is held in place therein by means of a vertical key pin **20** positioned in the vertical slot **16** and extending through the extremity **18** of the shank **19**. A head **21** on the upper extremity of the pin **20** prevents the latter from dropping through the vertical slot **16**.

An arcuately-faced clamping washer **22** surrounds the rowel shank **19** and is clamped against the arcuate surface of the boss **15** by means of a lock nut **23** threaded on external threads **24** formed on the rowel shank.

Thus, it can be seen that the rowel shank can be moved along the horizontal slot **17** to any desired radial angle from the solid line position to the broken line position of FIG. 1 and can be fixed at the desired angle by tightening the lock nut **23** to clamp the boss between the key pin **20** and the clamping washer **22**.

2

Thus, the direction of projection of the rowel shank can be preset at any desired angle relative to the vertical axis plane of the spur by shifting it along said arcuate boss **12**.

A cylindrical rowel fitting **25** is adjustably mounted on the rowel shank. The rear extremity of the rowel fitting is notched, as indicated at **26** to receive a conventional spur rowel **27** mounted on a horizontally-extending pivot pin **28**. The rowel may be any of the conventional varieties. The forward extremity of the rowel fitting is drilled to form a longitudinally-extending socket **29** to receive the rear extremity of the rowel shank and the walls of the socket are provided with contraction splits **30** to allow the walls to be contracted into gripping engagement with the shank. The gripping action is provided by a chuck nut **31** which is threaded onto taper threads **32** formed on the rowel fitting so that when threaded forwardly, it will cause the fitting to fixedly grip the shank and when threaded rearwardly, it will release the shank to allow a length adjustment between the rowel and the heel yoke.

Thus, it can be seen that the spur can be quickly adjusted as to length of rowel shank and angle of rowel shank to suit the individual rider and then can be fixedly set in the desired adjusted position.

While a specific form of the invention has been described and illustrated herein, it is to be understood that the same may be varied, within the scope of the appended claims, without departing from the spirit of the invention.

Having thus described the invention, what is claimed and desired secured by Letters Patent is:

1. A horseman's spur comprising: a U-shaped heel yoke having two substantially parallel side portions joined by an arcuate rear portion; strap attachment means on each of the side portions; a rowel shank extending rearwardly from said arcuate rear portion; a rowel supported by said rowel shank; shiftable mounting means including an arcuate horizontal slot in and concentric with said arcuate rear portion and connecting said shank to said arcuate portion so that said shank may be shifted sidewardly in the plane of said yoke; and means for locking said shank in any selected shifted position.

2. A horseman's spur comprising: a U-shaped heel yoke having two substantially parallel side portions joined by an arcuate rear portion; strap attachment means on each of the side portions; a rowel shank extending rearwardly from said arcuate rear portion; a rowel supported by said rowel shank; shiftable mounting means connecting said shank to said arcuate portion so that said shank may be shifted sidewardly in the plane of said yoke; and means for locking said shank in any selected shifted position, said shiftable mounting means including an arcuate slot extending vertically through said arcuate rear portion and following the arcuate contour of the latter; a relatively narrow slot extending horizontally into said arcuate rear portion and intersecting said vertical slot, the forward extremity of said shank extending into said narrow slot; and a vertical retaining element extending downwardly in said arcuate slot and through said shank for preventing removal of the latter, said retaining element being longitudinally movable in said arcuate slot when desired.

3. A horseman's spur as described in claim 2 having means on said shank for clamping said retaining element stationary at any desired point along said arcuate slot.

4. A horseman's spur comprising: a U-shaped heel yoke having two substantially parallel side portions joined by

an arcuate rear portion; strap attachment means on each of the side portions; a rowel shank extending rearwardly from said arcuate rear portion; a rowel supported by said rowel shank; shiftable mounting means including an arcuate horizontal slot in and concentric with said arcuate rear portion and connecting said shank to said arcuate portion so that said shank may be shifted sidewardly in the plane of said yoke; means for locking said shank in any selected shifted position; a rowel fitting telescopically fitted over the rear of said rowel shank; and means for locking said fitting to said shank at any desired longitudinal position thereon.

References Cited by the Examiner

UNITED STATES PATENTS

655,555	8/00	Jackson	54—83
900,717	10/08	Feaster	287—116
904,341	11/08	Lindstrom	287—116
973,367	10/10	McKinney	54—83
1,351,619	8/20	Calderon	54—83
2,290,445	7/42	Oleyar	54—83

SAMUEL KOREN, *Primary Examiner.*

ALDRICH F. MEDBERY, *Examiner.*