Sept. 29, 1964 R. F. HALE 3,150,723

ROTARY COAL DRILL

Original Filed March 11, 1953 4 Sheets-Sheet 1

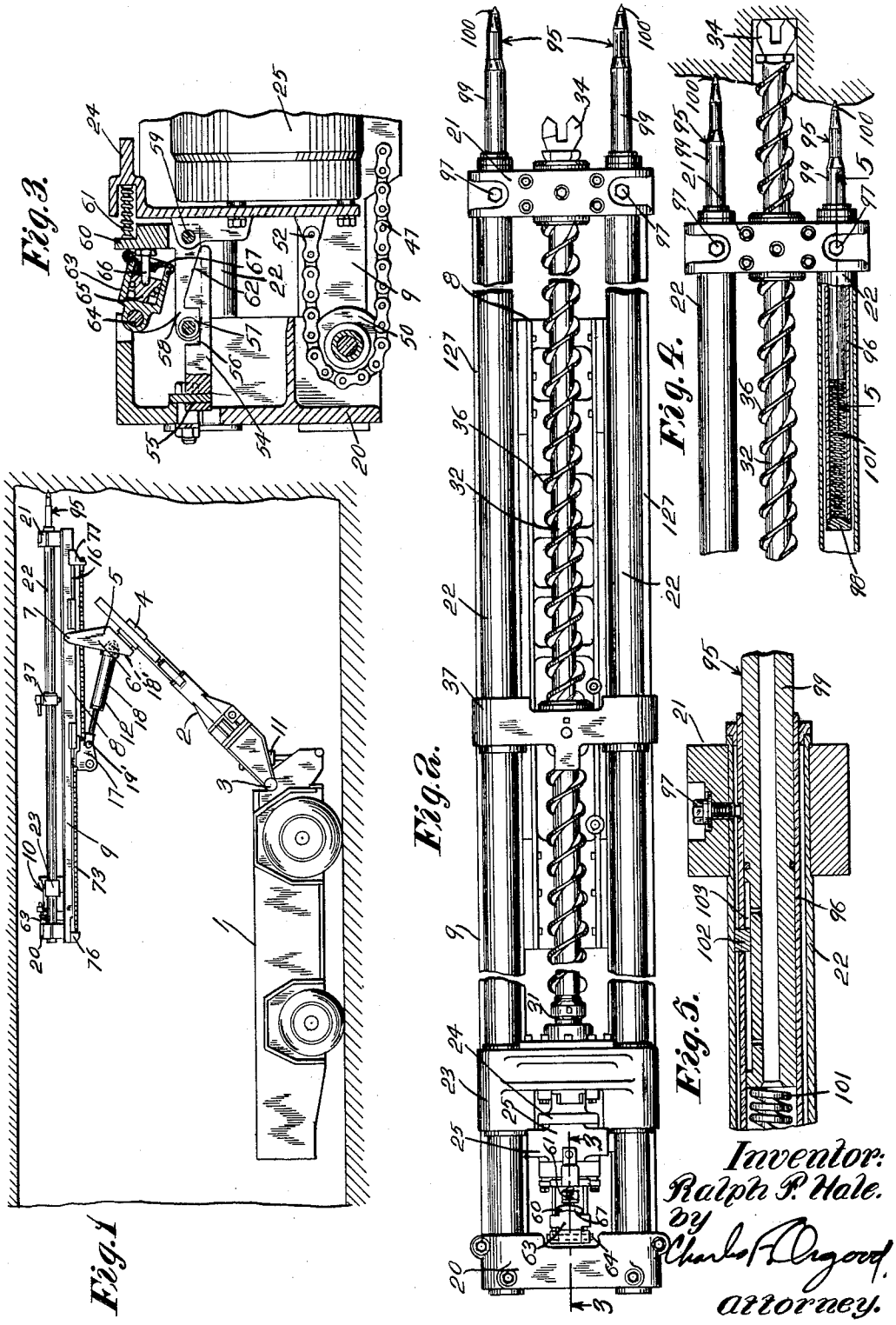

Inventor:
Ralph F. Hale.
by
Charles A. Dugard,
attorney.

ROTARY COAL DRILL

Original Filed March 11, 1953 4 Sheets-Sheet 2

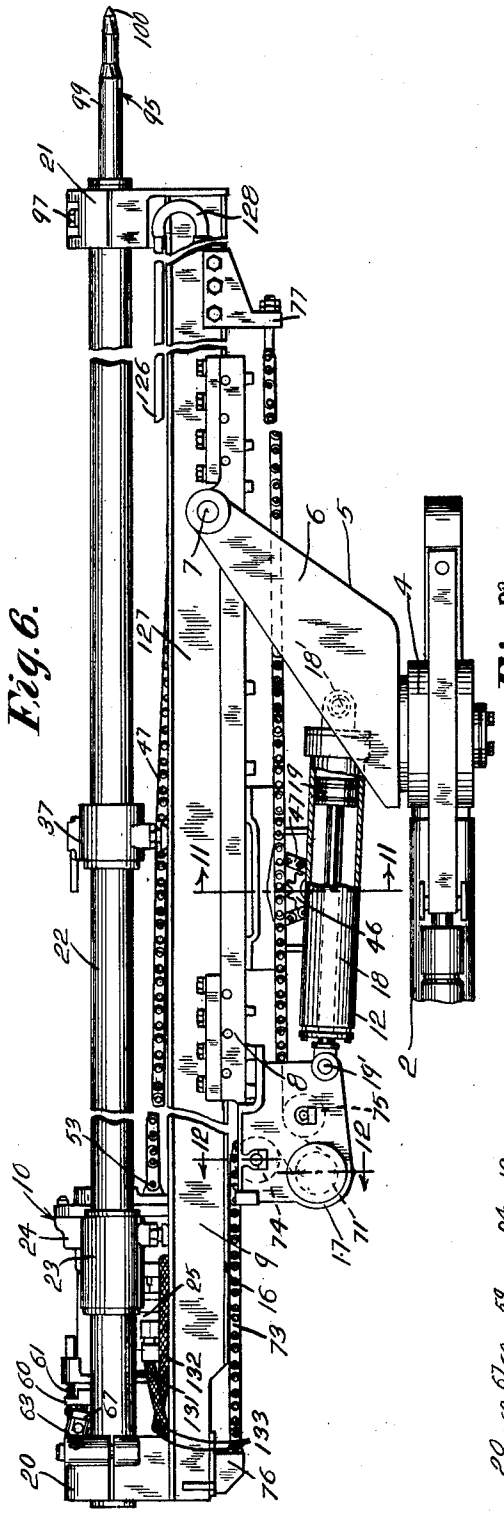

Fig. 6.

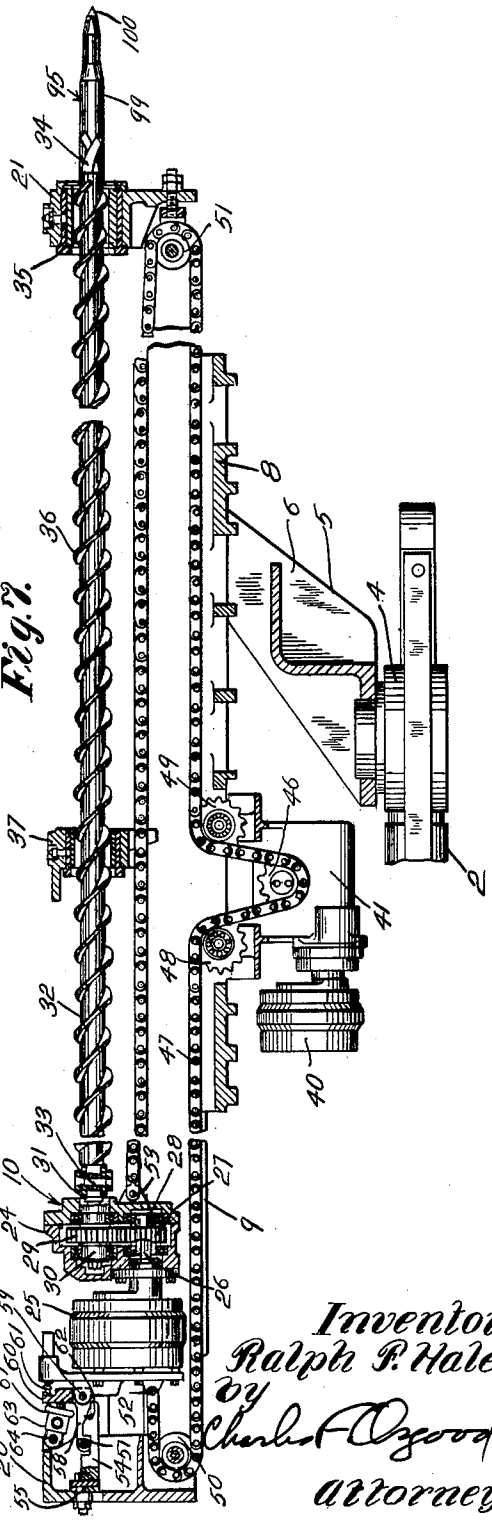

Fig. 7.

Inventor:
Ralph F. Hale.
by
Charles F. Osgood,
attorney.

ROTARY COAL DRILL

Original Filed March 11, 1953 4 Sheets-Sheet 3

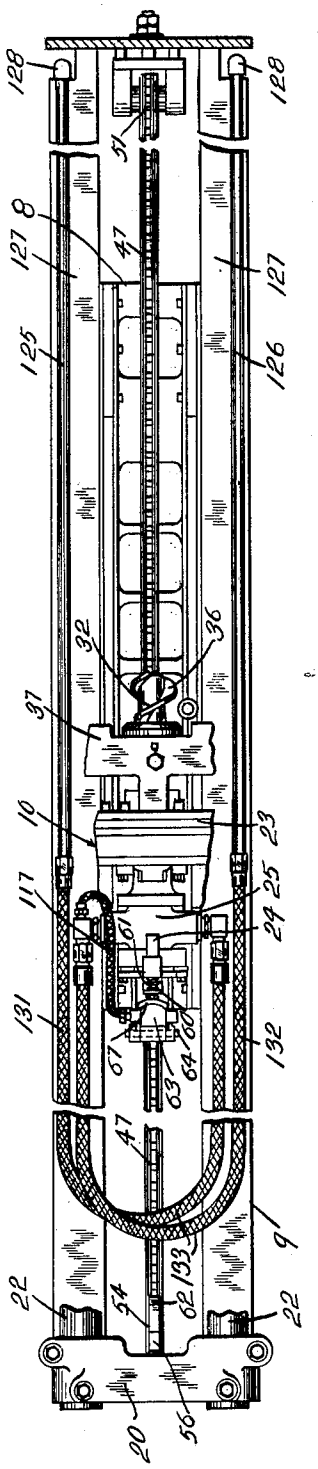

Fig. 8.

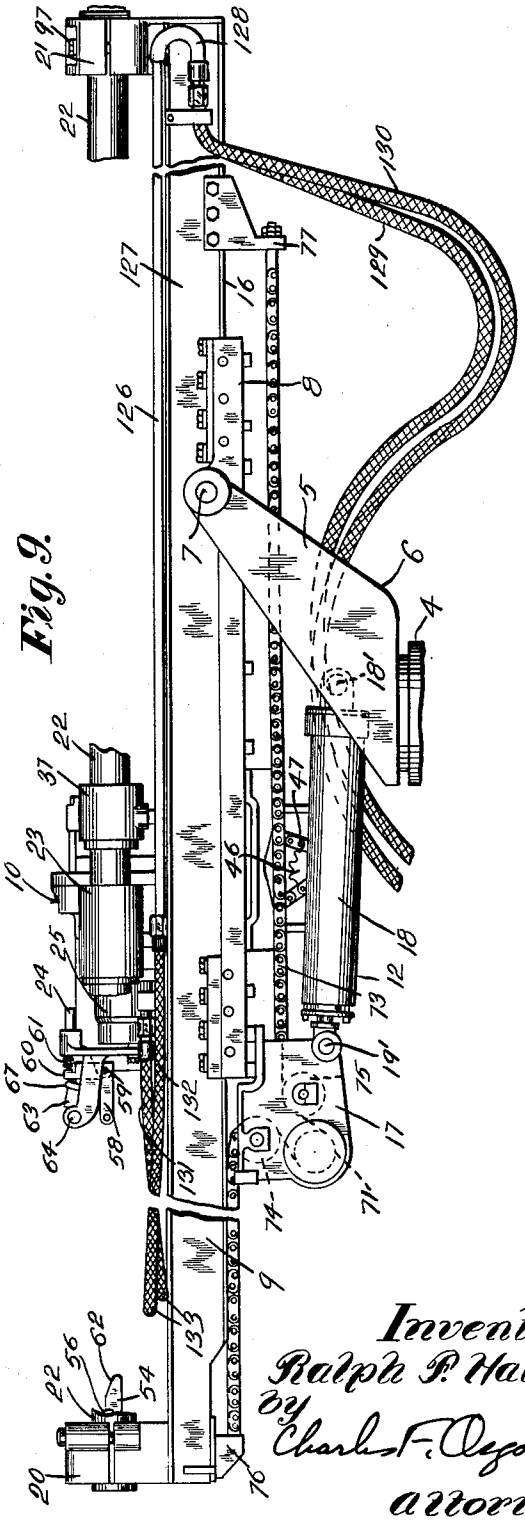

Fig. 9.

Inventor:
Ralph F. Hale.
By Charles F. Osgood,
attorney.

ROTARY COAL DRILL

Original Filed March 11, 1953 4 Sheets-Sheet 4

Fig. 10.

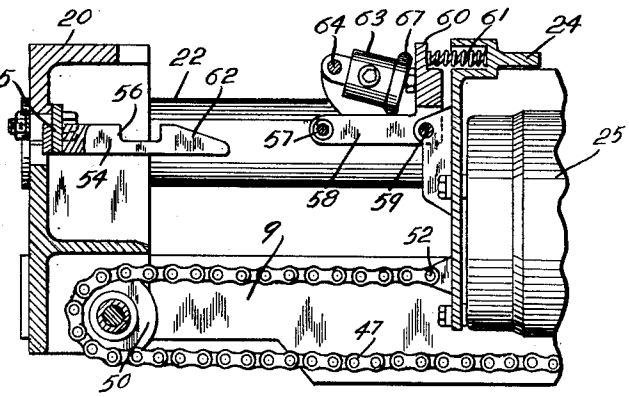

Fig. 11.

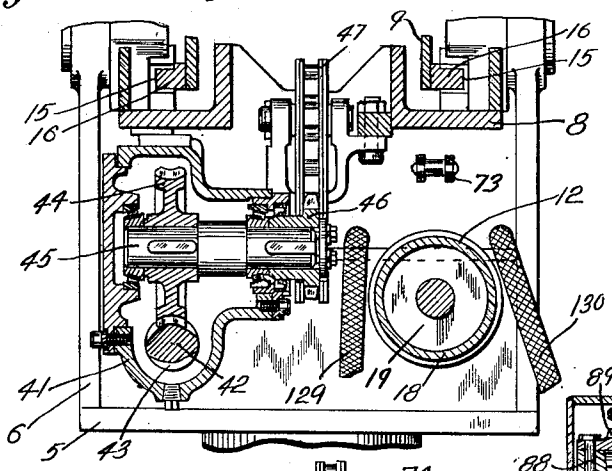

Fig. 13.

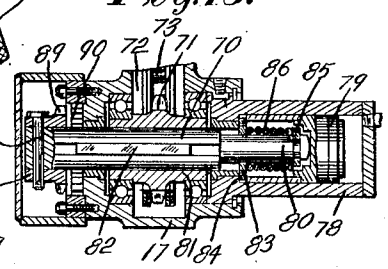

Fig. 12.

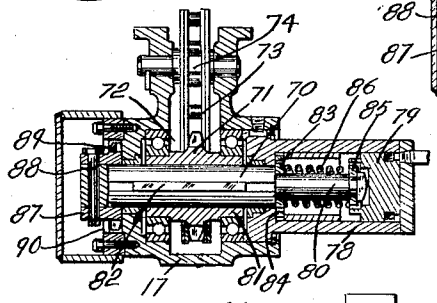

Fig. 14.

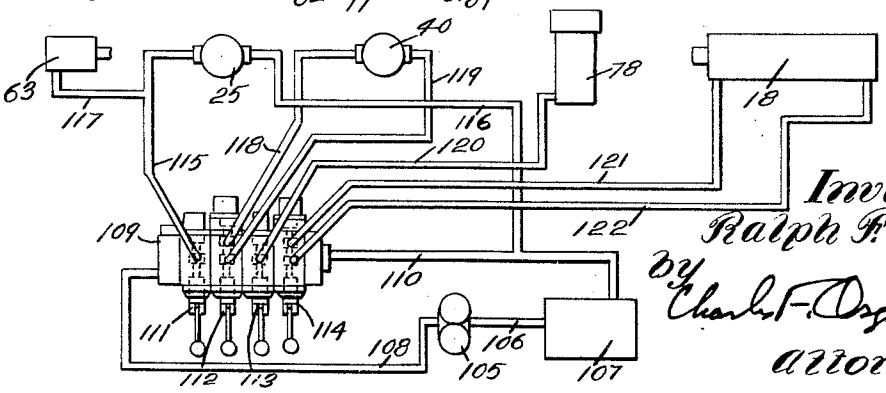

Inventor:
Ralph F. Hale.
by Charles F. Osgood,
attorney.

United States Patent Office

3,150,723

Patented Sept. 29, 1964

1

3,150,723
ROTARY COAL DRILL

Ralph F. Hale, Franklin, Pa., assignor to Joy Manufacturing Company, Pittsburgh, Pa., a corporation of Pennsylvania

Continuation of application Ser. No. 341,684, Mar. 11, 1953. This application Apr. 2, 1962, Ser. No. 186,591
9 Claims. (Cl. 173—37)

This invention relates to drilling tools and more particularly to a rotary coal drill especially designed for use in drilling blast holes in coal mines.

In coal drilling machines of the type employed in coal mines it is desirable that the machines be readily mobile, that the drilling tool be adjustable through a wide range with respect to the work, that the adjustable tool guide be held steady during drilling and that the tool feeding and guide adjusting connections be kept relatively free of complicated elements. The present invention contemplates improvements over known types of coal drills in that the desirable characteristics above outlined have been attained, not only in a relatively efficient and simple manner, but also so as to provide extreme ruggedness and ease of control.

This application is a continuation of my application Serial No. 341,684 filed March 11, 1953 now abandoned.

An object of the present invention is to provide an improved drilling tool. Another object is to provide an improved rotary coal drill guided for movement along an elongated guide frame during the drilling operation and having improved stabilizer means engaging the working face for maintaining the guide frame and drilling tool steady during drilling. A further object is to provide an improved power operated means for adjusting the guide frame longitudinally to bring the stabilizer means firmly against the face and having improved locking means associated therewith for maintaining the guide frame in adjusted position. Yet another object is to provide improved power operated feeding means for the drilling implement and having the improved guide frame adjusting means associated therewith in a novel manner. Still another object is to provide common motor means for adjusting the guide frame and for feeding the drilling tool, and having improved feeding and adjusting connections. Another object is to provide improved self-adjusting power conducting means for the drilling tool. A still further object is to provide an improved rotary coal drill having improved and simplified features of construction. These and other objects and advantages of the invention will, however, hereinafter more fully appear.

In the accompanying drawings there is shown for purposes of illustration one form which the invention may assume in practice.

In these drawings:

FIG. 1 is a side elevational view of a mobile drilling machine having the novel features of the invention embodied therein.

FIG. 2 is an enlarged plan view of the coal drill unit per se.

FIG. 3 is an enlarged central longitudinal vertical section taken on line 3—3 of FIG. 2, illustrating the auger feed lock with the drilling motor held in retracted position.

FIG. 4 is a plan view, partially in horizontal section, illustrating the yieldable stabilizer pins with the latter held in stabilizing position against an irregular working face.

FIG. 5 is an enlarged detail vertical section taken on line 5—5 of FIG. 4.

FIG. 6 is a side elevational view of the coal drill unit shown in FIG. 2, with certain parts omitted and another part shown partially in section.

2

FIG. 7 is a central longitudinal vertical section taken through the coal drill unit and a portion of its supporting structure.

FIG. 8 is a view in plan, with parts of the drill omitted, illustrating the fluid connections leading to and from the drilling motor.

FIG. 9 is a side elevational view of the drill structure shown in FIG. 8.

FIG. 10 is a vertical section, similar to FIG. 3, showing the auger feed lock in released position.

FIG. 11 is an enlarged transverse vertical detail section taken on line 11—11 of FIG. 6.

FIG. 12 is an enlarged transverse vertical section taken on line 12—12 of FIG. 6, illustrating the guide frame lock.

FIG. 13 is a sectional view, similar to FIG. 12, showing the guide frame lock in released position.

FIG. 14 is a diagrammatic view illustrating the hydraulic fluid system of the machine.

The mobile drilling machine with which the improved coal drill unit is associated, as shown in FIG. 1, generally comprises a mobile base **1** having swivelled thereon for horizontal swinging movement about an upright axis, an elongated boom frame **2** which is in turn swingable in vertical planes relative to the base about a horizontal pivot **3**. Carried at the outer extremity of the boom frame is a rotatable support **4** turnable about the longitudinal axis of the boom frame and having swiveled thereon to turn about a right angle axis a yoke frame **5**. Pivotally mounted on the arms **6** of the yoke frame, at **7**, is a tiltable supporting frame **8** on which an extendable guide or carriage frame **9** is mounted for longitudinal adjustment relative thereto. Guided for movement longitudinally relative to the guide or carriage frame **9** is a rotary auger drilling tool generally designated **10**. Conventional hydraulic jacks **11** and **12** respectively serve to swing the boom frame in vertical planes about its pivot and to tilt the supporting frame **8** about its pivot **7** and conventional hydraulic devices (not shown) serve to swing the boom frame horizontally, to turn the rotatable support and to swing the yoke frame **5** about its swivel mounting on the rotatable support. The base **1** is desirably mounted on steering and traction wheels in a conventional manner although evidently it may be mounted in other manners. Thus the drilling machine may be readily trammed about the mine and maneuvered with respect to the working face, and the coal drill unit may be readily adjusted through a relatively wide range, both in horizontal and vertical planes, to locate the drilling unit in the desired drilling position with respect to the work. It is not desired to limit the mounting means for the drilling unit to that disclosed since it may have other conventional types of mountings.

The tiltable supporting frame **8** has parallel longitudinally extending guideways **15** (FIG. 11) which slidingly receive guides **16** on the extendable or longitudinally adjustable guide or carriage frame **9**. Connected between the yoke frame **5** and a bracket **17** secured to the rearward portion of the supporting frame **8** is the hydraulic tilting jack **12** which comprises a hydraulic cylinder **18** (FIG. 6) pivotally mounted at **18'** on the yoke frame and containing a reciprocable double acting piston **19** having its piston rod pivotally connected at **19'** to the bracket **17**. Thus by properly supplying pressure fluid to the jack cylinder the supporting and guide frames for the drilling tool may be tilted into various angular positions with respect to the work, and by trapping fluid in the jack cylinder the frames may be rigidly held in their angular positions of adjustment.

The slidable guide or carriage frame **9** has projecting end frames or supports **20** and **21** which support parallel

longitudinally extending guide rods 22 rigidly secured to the end supports in spaced relation to the guide frame. Guided for movement along the parallel guide rods relative to the guide frame 9, longitudinally intermediate the end supports, is a sliding cross frame 23 which carries a housing 24 by which a drilling motor 25, herein desirably a conventional hydraulic motor, is mounted. Keyed to the motor power shaft 26 (FIG. 7) is a spur pinion 27 mounted on a shaft 28 journaled within the housing 24 and meshing with a spur gear 29 secured to a parallel shaft 30 likewise journaled within the cross frame housing. The shaft 30 carries a chuck 31 for receiving the shank of a conventional auger drill steel 32. The steel shank is detachably secured in the chuck by a removable cross pin or bolt 33, and the steel extends longitudinally between the parallel guide rods 22 and carries a detachable auger drill bit 34 at its forward end in advance of the front support 21. Detachably mounted within the front end support 21 is a guide bushing 35 through which the auger steel extends and in which the steel is guided as it moves axially. The auger steel has usual spiral vanes or conveyor flights 36 for conveying the cuttings from the drill hole during the drilling operation and the external peripheries of these spiral vanes slidingly and rotatatively engage the bore-walls of the guide bushing. A shiftable intermediate guide 37 serves to guide the intermediate portion of the auger steel in the manner disclosed in my copending application Serial No. 327,846, filed December 24, 1952, now abandoned.

A reversible motor 40, desirably a conventional hydraulic motor, is mounted on a housing 41 (FIGS. 7 and 11) carried by the tiltable supporting frame 8 and this motor drives a longitudinal shaft 42 suitably journaled within the housing 41 and formed on this shaft is a worm 43 meshing with a worm wheel 44, the latter in turn being keyed to a horizontal transverse shaft 45 likewise journaled within the housing. Keyed to this shaft exteriorly of the housing is a chain drive sprocket 46 engaging a feed chain 47 guided relative to the drive sprocket by parallel idler sprockets 48 and 49 (FIG. 7). This chain passes around rotary guides or guide rollers 50 and 51 journaled on the opposite end supports 20 and 21 respectively of the carriage frame and is attached at its ends at 52 and 53 to the opposite ends of the housing 24 by which the drilling motor 25 is carried. It will thus be seen that when the carriage frame 9 is locked against longitudinal movement relative to the supporting frame 8, in a manner to be later described, the motor 40 may be operated to drive the sprocket 46 through the worm gearing 43, 44 to effect circulation of the feed chain 47 relative to the guide frame 9 thereby to effect feeding movement of the drilling tool back and forth relative to the guide frame, depending upon the direction of operation of the reversible motor 40.

An auger feed lock for locking the drilling tool in retracted position on the guide frame 9 comprises a forwardly projecting bar or locking plate 54 (FIG. 3) rigidly secured at 55 to the rear support 20, and this bar is notched at 56 to receive a roller 57 of a pivoted latch 58. This latch is pivoted at 59 on the rearward portion of the housing 24 and arranged between a projecting arm 60 of the latch and the housing is a coil spring 61 which urges the latch roller 57 downwardly into contact with the notched locking bar. This notched locking bar has an inclined forward upper surface 62 so that as the drilling tool moves rearwardly and approaches its fully retracted position the roller 57 may ride up the incline and then drop downwardly into the notch 56 under the influence of the spring 61. A fluid cylinder 63 is pivoted to tilt in vertical planes at 64 on the support 20 and contains a reciprocable piston 65 which engages a rearwardly projecting pin 66 secured to the upright latch arm 60. The cylinder has a resilient rubberlike head 67 which sealingly engages about the rod 66 to prevent leakage of fluid from the cylinder while permitting relative angular movement of the cylinder and pin. When fluid under pressure is supplied to the cylinder 63 the latch arm 60 is moved forwardly against the action of the spring 61 swinging the latch about its pivot 59 thereby to raise the roller 57 from locking engagement with the notch 56 of the locking bar, thereby to release the drilling tool from its locked retracted position on the guide frame.

A glide frame lock is provided which comprises a horizontal transverse shaft 70 journaled within the bracket 17 and keyed to this shaft is a chain sprocket 71 arranged within a chamber 72 provided within the bracket 17 (FIG. 12). This sprocket engages a chain section 73 which is guided relative to the chain sprocket 71 by rotary idlers or idler rolls 74 and 75 likewise suitably journaled on the bracket 17. The opposite end portions of this chain section respectively extend forwardly and rearwardly longitudinally of the sliding guide or carriage frame 9 and are attached at the rear end to a lug 76 secured to the rear end of the guide frame and at the forward end to a lug or bracket 77 secured to the forward portion of the guide frame, as shown in FIGS. 6 and 9. Arranged in axial alignment with the shaft 70 is a fluid cylinder 78 carried by the bracket 17 and containing a reciprocable piston 79 engaging an axial projection 80 on this shaft (FIG. 12). The shaft 70 is slidable axially within a tubular shaft 81 on which the chain sprocket 71 is mounted and has a sliding key connection 82 with the sprocket-shaft. A collar 83 surrounds the shaft projection 80 and abuts a shoulder 84 at the inner end of the cylinder and arranged between this collar and a collar 85 secured to one end of the shaft projection, and encircling the latter within the cylinder, is a coil spring 86 for constantly urging the shaft and piston toward the right in FIG. 12. A sleeve 87 is secured by a pin 88 to the end of the shaft opposite from the shaft-projection 80 and this sleeve is provided with locking teeth 89 engageable with locking teeth 90 secured to the bracket 17. When the teeth 89, 90 are in interlocking engagement the shaft 70 and the sprocket 71 are positively locked against rotation, and when pressure fluid is supplied to the cylinder 78 at the right of the piston in FIG. 12, the piston is moved toward the left, shoving the shaft axially to the position shown in FIG. 13, thereby freeing the shaft and sprocket for rotation. It will thus be evident that when the drilling tool 10 is locked in retracted position on the guide frame, and the sprocket 71 is freed for rotation, the motor 40 may be operated to feed the guide frame 9 longitudinally in one direction or the other along its guideways on the supporting frame 8, depending upon the direction of operation of the reversible motor. When the sprocket 71 is locked against rotation and the locking latch for the auger drilling tool is released the motor 40 may be operated to feed the drilling tool back and forth along the then stationary guide frame 9, likewise under the control of the reversible motor.

Frame stabilizer means, generally designated 95, is carried at the forward end of the sliding guide or carriage frame 9 and comprises, as shown most clearly in FIGS. 4 and 5, tubular elements or sleeves 96 fitted within the forward portions of the guide rods 22 which are tubular and held in position therein as by screws 97. These sleeves have rear heads or caps 98 and slidingly fitted within the sleeves are plungerlike abutment members in the form of rods or pins 99 provided with pointed forward ends 100 engageable with the face of the work, for a purpose later described. Arranged within the sleeves between the rear heads 98 and the rear ends of the pins are coil springs 101 which yieldingly urge the pins forwardly, and stop keys 102 secured to the sleeves are received in key slots 103 in the pins, and these keys and key slots coact to limit the axial sliding movement of the pins within the sleeves. When the motor 40 is operated to effect sliding of the guide frame 9 forwardly along

its guideways relative to the supporting frame 8 the pointed ends of these stabilizer pins are brought into engagement with the working face (FIG. 4) and upon further movement of the guide frame the springs are compressed and when the springs are under a predetermined compression, the fluid actuated lock 89, 90, upon venting thereof, is automatically moved into locking position thereby to lock the sliding guide frame 9 against adjusting movement relative to the supporting frame 8. Thus these stabilizer pins yieldingly maintain the drill unit steady during the drilling operation.

Now referring to the hydraulic fluid system shown diagrammatically in FIG. 14, it will be noted that a conventional motor driven pump 105 has its suction side connected by a conduit 106 to a tank or reservoir 107 for containing a liquid, desirably a light oil, and the discharge side of the pump is connected by a conduit 108 to the pressure passage of a valve box 109 of a conventional slide valve mechanism. The discharge passage of the valve box is connected by a conduit 110 back. The valve box has parallel bores containing slide valves 111, 112, 113 and 114 respectively, desirably of the conventional balanced spool type, each provided with a suitable operating handle. The bore containing the slide valve 111 is connected by a conduit 115 to the drilling motor 25 and the fluid discharged from this motor is conducted through a return conduit 116 leading back to the tank. A branched conduit 117 leading from the motor supply conduit 115 is connected to the fluid cylinder 63 of the auger feed lock so that when liquid under pressure is supplied to the drilling motor it is simultaneously supplied to the lock release cylinder. Thus whenever the motor 25 is operated the auger feed lock is automatically released and when the motor is stopped the latch of the lock is rendered automatically effective. The bore containing the slide valve 112 is connected by conduits 118 and 119 to the opposite sides of the reversible feed motor 40, while the bore containing the slide valve 113 is connected by a conduit 120 to the cylinder 78 of the chain sprocket lock. The bore containing the slide valve 114 is connected by conduits 121 and 122 to opposite ends of the tilt cylinder 18 of the fluid jack 12.

As shown in FIGS. 8 and 9, the supply and discharge conduits 115 and 116 leading to and from the hydraulic drilling motor 25 are in part rigid and in part flexible and are arranged in a compact and relatively protected manner on the sliding guide frame beneath the guide rods and provide sufficient slack so that as the drilling motor 25 travels back and forth along the guide rods, the conduits are self-adjusting. Rigid pipe sections 125 and 126 extend longitudinally in parallelism along the upper surfaces of the side members 127 of the guide frame and are provided with forward U-connections 128 which lie within the front supports 21, and flexible supply and exhaust pipe sections 129 and 130 lead from these U-connections downwardly and rearwardly through the yoke frame 6, as shown in FIG. 9. The rear ends of the rigid pipe section are disposed substantially midway between the ends of the guide frame and flexible pipe sections 131 and 132 lead from the rear ends of the rigid pipe sections 125 and 126 respectively to the opposite sides of the drilling motor 25. These flexible sections are arranged in loops or bights 133 along the top of the side members of the carriage frame as shown in FIG. 8, and these flexible loop sections permit the drilling motor 25 to move back and forth along the guides without interference of the flexible conduits or danger of their becoming taut thereby eliminating the possibility of damage or breakage. The branch conduit 117 leading to the lock release cylinder 63 may also consist of a flexible pipe section, as shown in FIG. 8. Thus by the provision of such a conduit arrangement it is possible to feed the drilling tool back and forth along its guideways without danger of possible entanglement or breakage of the pipes of the conduits. Since the pairs of pipe sections 125 and 126 and 131 and 132 lie between the parallel guide rods 22 and the parallel side frame members 127, they are to a substantial extent protected against falling roof or other possible damage.

The general mode of operation of the improved drilling machine above described is as follows: The machine may be trammed about the mine and maneuvered with respect to the working face under the propulsion of the mobile base and when the machine is properly located with respect to the work, the boom frame 2, the support 4, the yoke frame 5 and the supporting frame 8 may be adjusted about their respective axes to locate the drilling tool in the desired operating position. The drilling tool when not in operation is normally held locked in retracted position on the guide frame 9 by the latch 58 and the motor 40 may be operated under the control of the slide valve 112 to effect drive of the sprocket 46 and feed chain 47 to slide the guide frame 9 forwardly along its guideways on the supporting frame 8 to bring the yieldable stabilizer pins 99 against the working face, placing the springs 101 under substantial compression. Pressure fluid may then be vented from the lock release cylinder 78 under the control of the slide valve 113 to cause the spring 86 to move the locking teeth 89, 90 into interlocking engagement thereby to prevent rotation of the sprocket 71 rigidly to lock the chain section 73 against circulation rigidly to hold the slidable guide frame 9 in adjusted position. The stabilizer pins 99, which are held against the working face with substantial force by the compressed springs, maintain the guide frame 9 steady during the drilling operation so that the possibility of substantial vibration set up within the drilling tool is substantially reduced or avoided. The valve 111 may then be manipulated to effect pressure fluid supply to the drilling motor 25 to effect rapid rotation of the auger drill steel and drill bit and simultaneously fluid flow occurs to the lock release cylinder 63 to effect release of the latch 58 from the notched locking bar 54, and the feed motor 40 may then be operated under the control of the slide valve 112 to feed the drilling motor forwardly along the parallel guide rods 22 of the guide frame 9 to cause the rapidly rotating drill bit to penetrate the working face. When a blast hole of the desired depth has been completed the slide valve 112 may be positioned to effect reversal of the feed motor 40 thereby to retract the auger steel and drill bit from the face and the lock cylinder 63 is simultaneously vented so that as the drilling tool approaches its retracted position on the guide frame the latch 58 may again drop into the notch of the locking bar to hold the drilling tool in retracted position. When desired the slide valve 113 may be positioned to effect venting of the chain lock release cylinder 78 thereby to free the chain sprocket 71 for rotation, causing a slight retraction of the guide frame 9 from the working face due to the action of the stabilizer springs 101 and to a large degree relieving the compression of the springs.

As a result of this invention an improved mobile drill is provided especially designed for drilling blast holes in coal mines, whereby the drilling of holes is more efficiently and expeditiously made possible. By the provision of the improved yieldable stabilizer means which is moved against the working face by the forward movement of the drill guide frame and is yieldably held under substantial compression against the face, it is made possible to maintain the drill unit relatively steady during the drilling operation. The novel auger feed lock and guide frame lock enable alternatively rigid holding of the guide frame against movement during drilling with the stabilizer means held firmly under compression against the working face and rigid holding of the drilling tool in retracted position during frame adjustment, and makes possible the use of but a single motor for effecting frame adjustment and feed of the drilling tool while eliminating all complicated adjusting and feeding connections. The pair of separate spring-loaded, laterally spaced stabilizer elements firmly engage the working face at spaced points to maintain the

drill guide frame steady even when the face is irregular or uneven. The drill is not only relatively simple in design and easy to operate but is also rugged in construction well adapted to withstand the severe demands of service. These and other advantages of the invention will be clearly apparent to those skilled in the art.

While there is in this application specifically described one form which the invention may assume in practice, it will be understood that this form of the same is shown for purposes of illustration and that the invention may be modified and embodied in various other forms without departing from its spirit or the scope of the appended claims.

I claim:

1. An apparatus for maintaining a drill support in an adjusted position, a supporting frame, an elongated guide frame slidably mounted on said supporting frame, a drill rotation motor slidably mounted on said elongated guide frame, selectively engageable locking means for securing said drill rotation motor against slidable movement relative to said elongated guide frame only when said drill rotation motor is in retracted position on said guide frame; other selectively engageable locking means for maintaining said guide frame against slidable movement relative to said supporting frame; selectively operable control means operatively connected to said first mentioned locking means and to said motor for rendering said first mentioned locking means ineffective and for actuating said motor simultaneously.

2. An apparatus for maintaining a drill supporting frame in drilling position, an elongated drill supporting frame including means for receiving a drill guide frame which is slidable along an axis, means connected to and in advance of said drill guide frame for engaging a surface to be drilled, said last mentioned means being reciprocable along an axis parallel to said first mentioned axis and including means for constantly urging said surface engaging means against such surface so that movement of said drill guide frame from its drilling position is resisted, drilling means guided for rectilinear movement on said guide frame along an axis contained in a plane containing said first mentioned axis, means for securing said drilling means against rectilinear movement along said guide frame only when said drilling means is in retracted position on said guide frame, other securing means for maintaining said drill guide frame against movement with respect to said supporting frame to maintain said surface engaging means which are connected to said drill guide frame in the surface to be drilled.

3. In combination, a support, a guide mounted on said support for adjustment in a longitudinal direction thereto, abutment means carried by said guide and engageable with the working face, a drilling implement guided on said guide for feeding movement therealong, and motor operated mechanism for adjusting said guide relative to said support to bring said abutment means into contact with the face and for feeding said drilling implement along said guide, said mechanism including a motor driven element common to and actuated by said motor during both feed of said implement and adjustment of said guide, releasable locking means for holding said guide stationary with respect to said support to effect feeding of said drilling implement by said mechanism, and releasable locking means comprising a rearwardly located latch effective only when said drilling implement is retracted with respect to said guide for holding said drilling implement stationary with respect to said guide to effect adjustment of said guide as aforesaid by said motor operated mechanism.

4. A drill comprising a supporting frame, an elongated guide frame guided for longitudinal movement by said supporting frame, a drilling tool guided for movement along said guide frame, motor operated means for adjusting said guide frame and for feeding said drilling tool along said guide frame, means for effecting one or the other of said functions comprising locking means including a rearwardly located latch effective only when said drilling tool is retracted on said guide frame for holding said drilling tool against feeding movement relative to said guide frame during adjustment of the latter and for holding said guide frame against movement relative to said supporting frame during feeding of said tool, and means for automatically effecting release of said latch of said locking means for said drilling tool whenever the latter is operated to effect drilling.

5. A drill comprising a supporting means, a drill guide frame along which a drilling tool is guided for longitudinal movement, said guide frame guided for longitudinal adjustment relative to said supporting means, yieldable stabilizer means carried at the forward end of said guide frame and engageable with the working face, means for moving said guide frame forwardly relative to said supporting means to bring said stabilizer means firmly into yielding contact with the face and to place the same under substantial compression to preload the same, and means for locking said guide frame in its forward adjusted position to hold said guide frame stationary and said stabilizer means under compression against the face thereby to maintain said guide frame steady during the drilling operation, said locking means comprising a sprocket journaled on said supporting means, a chain section attached at its opposite ends to the front and rear ends of said guide frame and passing around said sprocket, and a locking device for holding said sprocket against rotation during locking of said guide frame and releasable to permit free sprocket rotation during guide frame adjustment.

6. A drill comprising supporting means, an elongated guide frame guided for longitudinal adjustment relative to said supporting means, abutment means carried at the front end of said guide frame and engaging the working face to stabilize the drill during the drilling operation, a drilling tool guided for movement back and forth along said guide frame, a motor on said supporting means, feeding connections actuated by said motor and operatively associated with said guide frame and said drilling tool for adjusting said guide frame and feeding said tool, and means for selectively effecting either adjustment of said guide frame or feeding of said tool, said means for selectively effecting guide frame adjustment and feeding of said drilling tool comprising locking devices, one comprising a latch effective only when said drilling tool is in retracted position on said guide frame for locking said drilling tool against feeding movement relative to said guide frame during adjustment of the latter relative to said supporting means and another comprising a locking element rotatable relative to said guide frame for locking said guide frame against adjusting movement relative to said supporting means during feeding of said drilling tool.

7. In combination, a support and a guide mounted on said support for adjustment in a longitudinal direction relative thereto, abutment means carried by said guide and engageable with the working face, a drilling implement guided on said guide for feeding movement therealong, a motor mounted on said support, and mechanism operated by said motor for adjusting said guide relative to said support to bring said abutment means into contact with the face and for feeding said drilling implement along said guide, said mechanism maintaining said abutment means firmly against the face and including a flexible element connected to said guide, a rotatable member journaled on said support and with which said flexible element cooperates, releasable means for locking said rotatable member against rotation to lock said guide frame to said support to maintain said abutment means against the face during feeding of said drilling implement along said guide, and releasable means for locking said drilling implement against guided movement along said guide during adjustment of said guide relative to said support.

8. A drill as set forth in claim 6 wherein said locking devices are fluid actuated, and control valve means is pro-

vided for controlling fluid flow to said devices for effecting actuation thereof, said control valve means including a control valve separate from the latch control for controlling said rotatable locking element.

9. A drill as set forth in claim 8 wherein said latch is fluid actuated and one of said valve means controls fluid flow to said latch to effect release of said latch whenever the tool is operated to effect drilling.

References Cited in the file of this patent

UNITED STATES PATENTS

686,257	Burgh	Nov. 12, 1901
2,301,887	Lamb	Nov. 10, 1942
2,365,749	Curtis	Dec. 26, 1944
2,958,514	Lee	Nov. 1, 1960