June 16, 1964 S. C. HAMILTON ETAL 3,137,247

OPERATING MECHANISM FOR DOORS ON HOPPER TYPE CARS

Filed Aug. 4, 1961 4 Sheets-Sheet 1

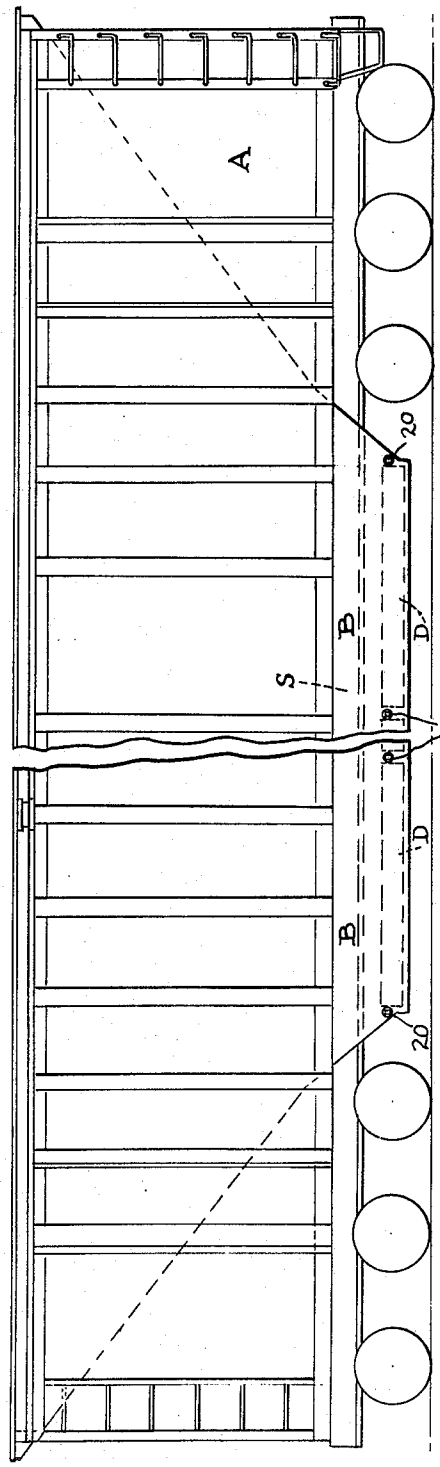

FIG. 1.

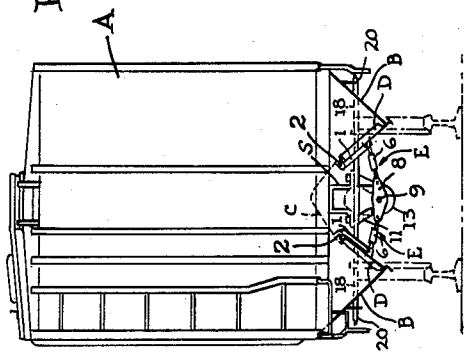

FIG. 2.

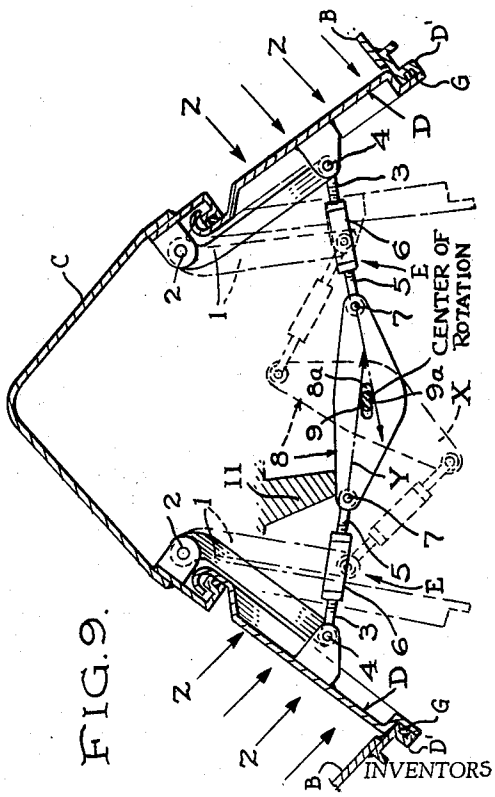

FIG. 9.

INVENTORS

SAMUEL C. HAMILTON

S. HOWARD LAGERVELD

BY

ATTORNEY

June 16, 1964 S. C. HAMILTON ETAL 3,137,247

OPERATING MECHANISM FOR DOORS ON HOPPER TYPE CARS

Filed Aug. 4, 1961 4 Sheets-Sheet 2

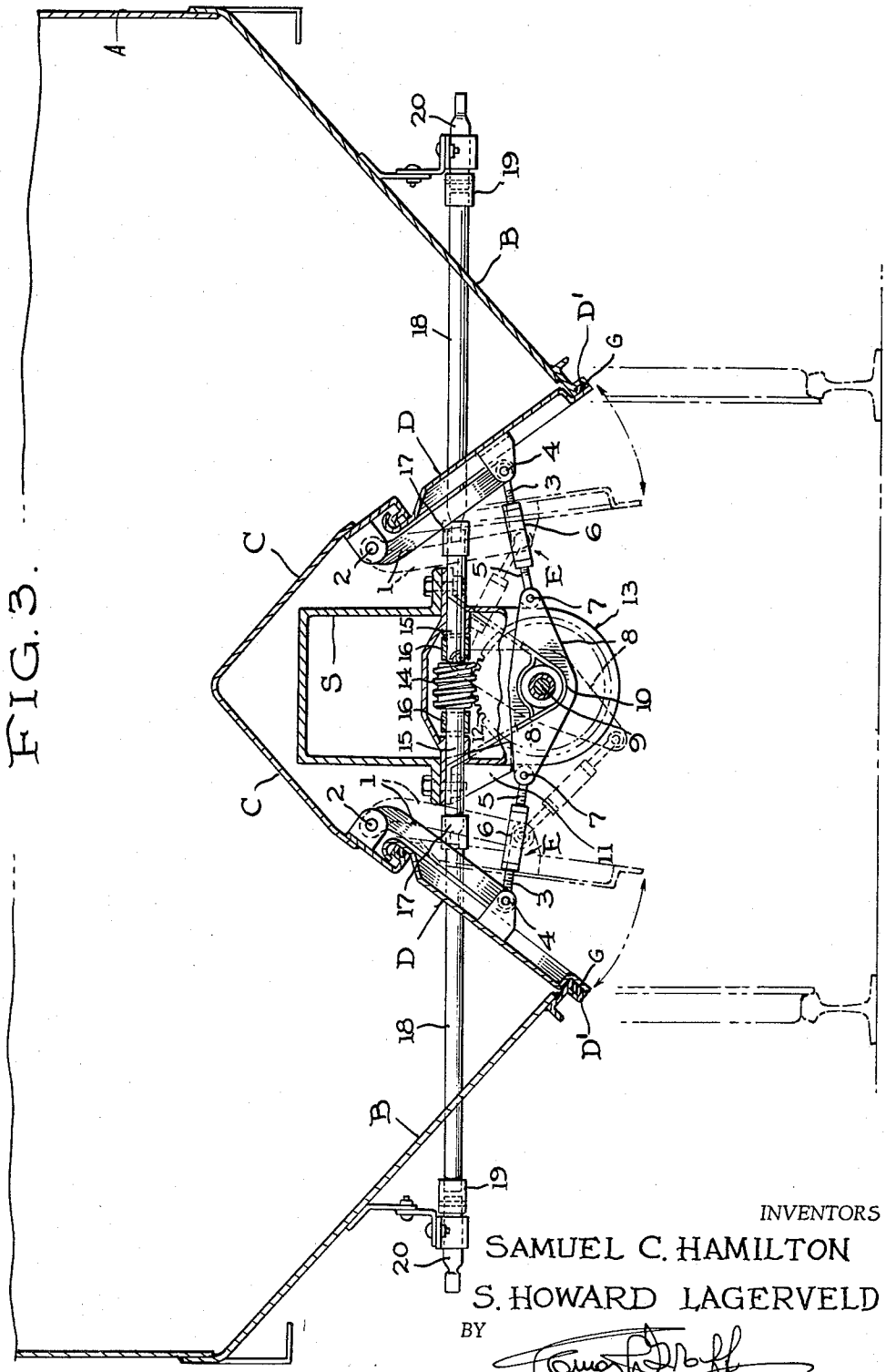

FIG. 3.

INVENTORS
SAMUEL C. HAMILTON
S. HOWARD LAGERVELD
BY
ATTORNEY

OPERATING MECHANISM FOR DOORS ON HOPPER TYPE CARS

Filed Aug. 4, 1961 4 Sheets-Sheet 3

FIG. 4.

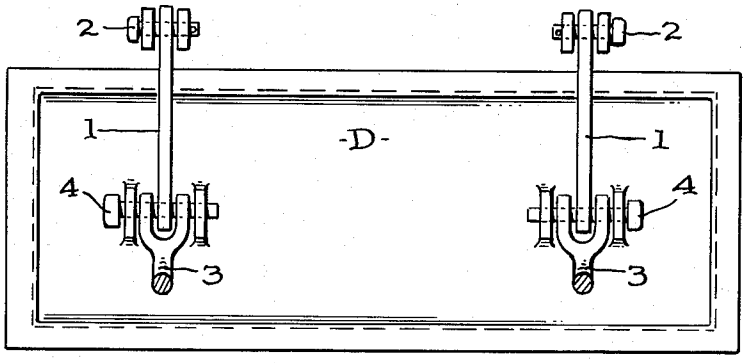

FIG. 5.

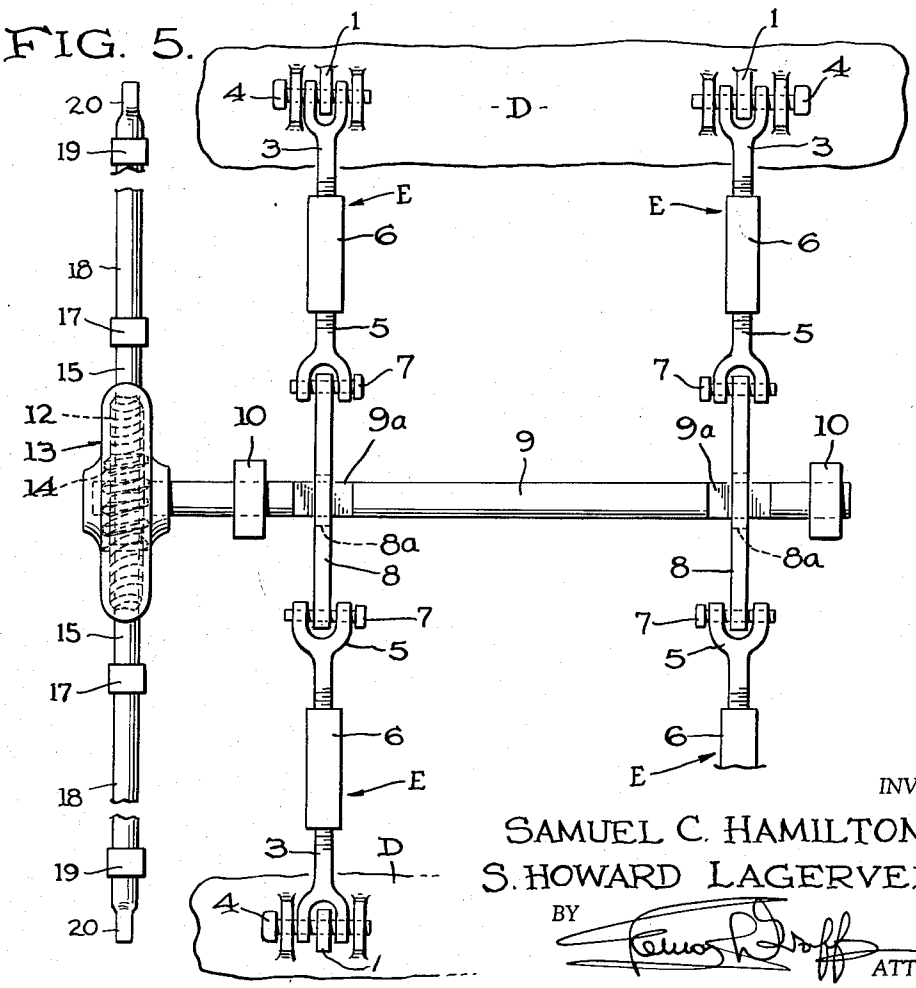

INVENTORS

SAMUEL C. HAMILTON

S. HOWARD LAGERVELD

BY

ATTORNEY

OPERATING MECHANISM FOR DOORS ON HOPPER TYPE CARS

Filed Aug. 4, 1961 4 Sheets-Sheet 4

FIG. 6.

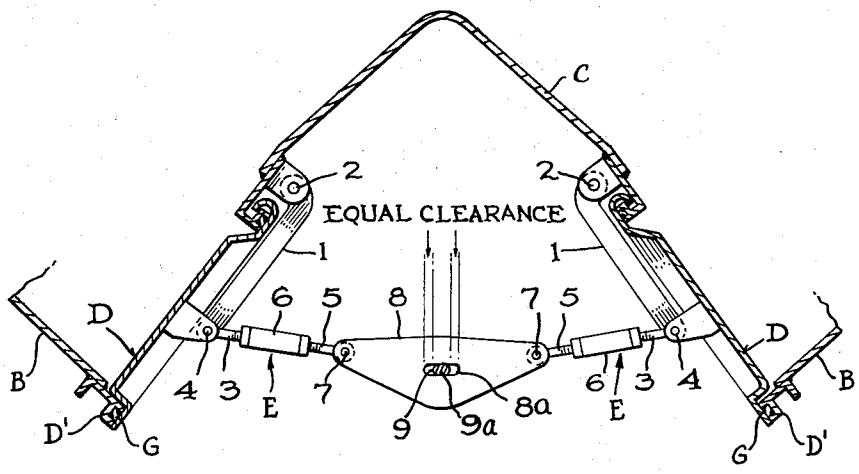

FIG. 7.

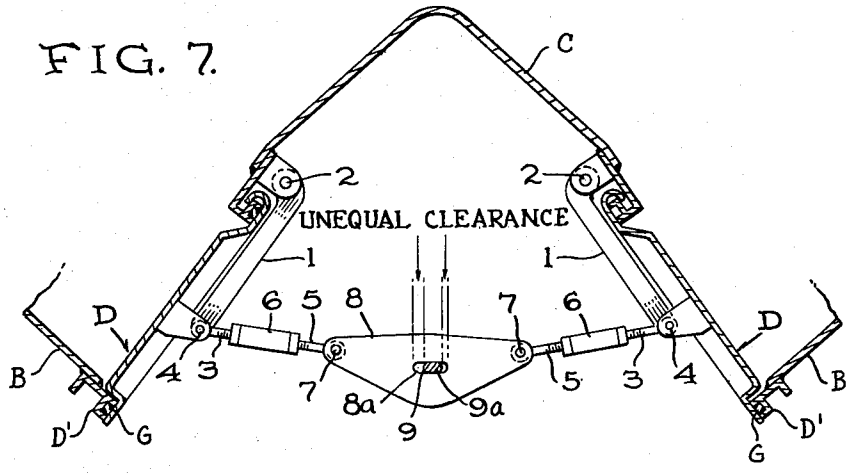

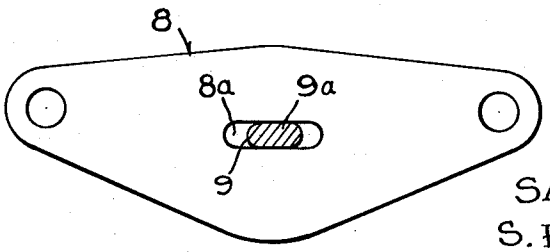

FIG. 8.

INVENTORS
SAMUEL C. HAMILTON
S. HOWARD LAGERVELD
BY
ATTORNEY

United States Patent Office

3,137,247

Patented June 16, 1964

1

3,137,247
OPERATING MECHANISM FOR DOORS ON HOPPER TYPE CARS

Samuel C. Hamilton, Clifton, and Sebastian Howard Lagerveld, Wayne, N.J., assignors to Magor Car Corporation, Clifton, N.J., a corporation of Delaware

Filed Aug. 4, 1961, Ser. No. 129,408
1 Claim. (Cl. 105—251)

This invention relates to an improvement in hopper car type outlets having doors adapted to be readily and easily manipulated and capable of being forcefully set in closed position to provide a completely escape-tight seal.

In many cases, cars of the hopper type class are dispatched in one direction with a dry bulk cargo, and if they cannot pick up a similar cargo on the return trip, the latter produces no revenue. It also happens in some cases that, where dry bulk is shipped in one direction, the cars could pick up bulk fluid material, such as molasses or the like, thereby making the return trip carry a payload.

Accordingly, the primary object of the invention is to provide a new type of car intended to have a single hopper having outlets completely adaptable to either dry or liquid cargo. That is to say, the present invention provides discharge outlets which will achieve many advantageous results in the handling of bulk materials and foodstuffs in either dry or liquid form, the said outlets being disposed longitudinally in a manner that a maximum of lading may be carried, because there are no intervening latitudinal hoppers or slope sheets. Moreover, the absence of a plurality of hoppers also reduces the cost of manufacture and eliminates extra material.

Another object of the invention is to provide outlets which empty the lading between the rails rather than over or across them, as do some other type outlets. In connection with the emptying or discharging operation, flow may be adjusted to any rate desired, and will hold this given adjustment without further attention.

Another object of the invention is to provide elongated rectangular doors with high pressure operating mechanism so that the resilient gasketing material between the doors and frames, as well as the novel means for distributing the pressure evenly to all sides of the doors, makes it possible to carry ladings of finely powdered material or even viscous liquids, which heretofore have required entirely different types of cars of specialized construction for proper handling.

A still further object of the invention is to provide a mechanism arranged so that the doors may be operated from either side of the car as well as controlled from the same side. This operating mechanism may be actuated by hand, or a power driven wrench may be used to effect opening or closing.

A still further object of the invention is to provide a double safety feature of construction incorporated in the operating mechanism which automatically locks the doors and eliminates the need for separate locks or latches.

With the above and other objects in view, which will more readily appear as the nature of the invention is better understood, the same consists in the novel construction, combination, and arrangement of parts, hereinafter more fully described, illustrated, and claimed.

2

A preferred and practical embodiment of the invention is shown in the accompanying drawings, in which:

FIGURE 1 is a side elevation of the new hopper type car construction.

FIGURE 2 is an end elevation of the car shown in FIGURE 1, and including the present improvements.

FIGURE 3 is an enlarged transverse sectional view of the doors and the operating mechanism.

FIGURE 4 is a fragmentary view illustrating one of the new doors.

FIGURE 5 is a somewhat schematic view which, when combined with FIGURE 4, illustrates the operating means for the door.

FIGURE 6 is a diagrammatic view illustrating the doors in normal closed condition and emphasizing equal clearance for the cranks at either side of the operating shaft.

FIGURE 7 is a view similar to FIGURE 6, illustrating a condition where one of the turnbuckles has been adjusted to greater length than the other turnbuckle, and showing that the crank has shifted to equalize the force on opposite doors.

FIGURE 8 is a detail elevation of the operating shaft and crank, showing the opening in which the shaft may slide.

FIGURE 9 is a diagrammatic view illustrating the over-center lock feature.

Similar reference characters designate corresponding parts throughout the several figures of the drawings.

As will be observed from FIGURES 1 and 3, the hopper type car is designated generally as A and is provided medially between the trucks with the side sheets B, inclined downwardly and inwardly, to cooperate with the pyramidal center sill hood C to provide opposite laterally disposed lading pockets communicating with the doors D. These doors are preferably of rectangular formation to fit into corresponding openings D^1 to selectively close and open to receive and discharge the lading.

In order to insure fluid tightness between the doors D and their frames D^1, suitable gasket means G may be employed, and, as will be further observed from FIGURES 1 and 3, each door preferably has a pair of hinge arms **1** supported on hinge pivots **2**, the said arms **1** being controlled by actuating elements E.

Preferably, the elements E include outer links **3** pivotally connected as at **4** with the outer surface of the related door and the inner link **5**, the said links **3** and **5** being connected by suitable turnbuckles **6**. The inner ends of the links **5** are pivotally connected at **7** to related arm portions of crank members **8**. Each crank **8** is mounted on shaft **9**, supported by the strap **10** of substantially V-shaped formation and whose upper ends are appropriately secured adjacent the center sill S of the car.

In order to prevent overthrow movement of the cranks **8** from their normal locked position, a suitable abutment **11** (FIGURE 3) projects downwardly from the center sill assembly so that its lower edge will abut with the crank, as also shown in FIGURE 3.

The drive shaft **9** for the links carries at one end thereof a worm gear **12**, mounted in a housing **13** and intended to mesh with a worm **14**.

As will be additionally observed from FIGURE 3, the worm **14** is coaxially carried on a stub shaft **15**, disposed in journals **16**. The ends of these journals are provided

with thrust couplings **17**, intended to receive the key end of a related operating shaft **18** directed to the outer side of the car. This operating shaft in turn cooperates with a shear coupling **19**, which houses an actuating wrench head **20**.

It will now be seen how the worm **14**, which controls the cranks **8**, may be operated from either side of the car by applying a suitable hand or power wrench to the key portion of the wrench head.

The cranks **8**, as will be more particularly observed from FIGURES 6–9, inclusive, are provided with elongated slots **8**[a], which receive the flattened section **9**[a] of the actuating shaft **9**.

FIGURE 6 illustrates the normal condition of the parts, wherein the crank **8** is centered on the shaft **9** and can have an equal degree of movement to either side of the center as indicated by the diagrammatic lines.

FIGURE 7 illustrates a situation where unequal clearance may exist between the cranks **8** and the shaft **9** as, for example, when one of the turnbuckles **6** has not been adjusted to the same degree as its related buckle. In this situation, the unequal clearance will be apparent from the diagrammatic illustration of FIGURE 7. While, the righthand turnbuckle has been adjusted to greater length than the lefthand turnbuckle, the crank lever **8** has shifted to equalize the force on the doors.

FIGURE 8 is an enlarged detail view of one of the cranks and its slot, which receives the flattened portion **9**[a] of the actuating shaft **9**.

FIGURE 9 illustrates the over-center lock, which takes advantage of the load pressure to maintain tight sealing engagement between the doors and the door frames. That is to say, it will be seen from this figure that, as crank **8** is rotated from open position X shown in dashed lines in a clockwise direction toward the closed position Y, the force caused by the door weight, resilient gaskets, and later the weight of the lading, as represented by the arrows Z—Z, passes from a position which would cause counterclockwise rotation of the crank through dead center (center of rotation) to the over-center position shown. In this position, the forces Z—Z are now applied to rotate the cranks in a clockwise direction. Further rotation is resisted by the abutment or stop **11** on the car frame. In this position, the doors are securely locked, and additional load on the doors will result only in an increase in the locking force.

Moreover, augmented locking force results from the geometry of the gear **12** and the worm **14** in the gear box **13**, because the worm can rotate the gear, but the gear cannot rotate the worm. Therefore, in the event that the cranks do not go over-center, opening of the doors is still prevented by the worm.

Description of Operation

Assuming that the doors are closed, and it is desired to open the same:

When power is applied to either end **20** of the shaft **18** by means of a power wrench or hand crank, rotational motion is transmitted through a suitable bearing and the shear coupling **19** to the gear box drive **12–14**. After the worm gear **14** turns the gear **12**, which is connected to drive shaft **9** and cranks **8**, the turnbuckles **6** pull the links **3** and **5** to move the doors from the doorway. The door position relative to the door frame may be closely regulated to control the flow or passage of lading from a fine trickle to a full flow.

Assuming now that the doors are to be closed, it will be understood that the opening process is reversed and the cranks **8** are pushed back until they and the turnbuckles **6** are in line. The cranks continue slightly past this point, and are then resisted by the related adjustable stop **11** on the car structure. Since the cranks and turnbuckles are overcenter, they are self-locking. Furthermore, it is pointed out that the force from the turnbuckle **6** is applied to the pivot pin **4**, which connects the link **3** with the door, hingedly supported as indicated at **2**. This feature allows the closing force to be evenly distributed around the periphery of the door so that high sealing pressure developed by the linkage going over the center is evenly applied to the gasket material.

An additional feature of the linkage is the manner in which the cranks are attached to the shaft **9**.

As previously indicated, each crank **8** has the elongated slot **8**[a] to receive the non-circular cross section **9**[a] of the shaft **9** in order to turn the cranks, but, the said slot **8**[a] is of greater length than the non-circular portion of the shaft **9**. Thus, even though the turnbuckles are misadjusted, the entire crank and turnbuckle assembly may shift in a lateral direction so that, as previously indicated, the resulting forces on the doors are equal. Again, with this arrangement, the pivotal connection to the doors D and the compensating means on the shaft **9** will insure equal force on each door and uniform pressure on the mating surface of the door and frame. At the same time, this arrangement will eliminate undesirable side thrust on the mechanism which would be caused by improper adjustments.

Although the drawings show the door pivotally connected to the hinge, the reverse of this could be true, namely that the hinge could be fastened to the door and sufficient clearance provided on parts of the hinge to allow the door to adjust itself to the frame. In either case, the hinge supports only the door weight, but does not restrict its movement as would be the case if a fixed pivot were employed.

We claim:

A freight car of the hopper type mounted on wheeled trucks for travelling over railway rails and adapted for the transportation of bulk or fluid lading, said car having a frame, side walls and end walls and being of greater length than width and including a center sill extending longitudinally thereof, and a hood above said sill,

(*a*) means forming opposite longitudinally aligned hopper openings medially of the bottom of the car to discharge lading between said rails,

(*b*) gasket means mounted on the means forming said openings and surrounding said openings,

(*c*) doors pivotally mounted on the car frame adjacent said hopper openings for opening and closing sealing engagement with said openings and gasket means,

(*d*) a pair of hinge arms each pivotally connected at one end to said car frame above the hopper openings and pivotally connected at its other end to each of said doors,

(*e*) a pair of spaced crank members for selectively operating opposite doors in unison from either side of the car, said crank members having aligned openings at opposite ends thereof and a slot disposed intermediate said openings and having its longitudinal axis parallel to but offset from the plane of said openings, said slot forming the pivot point for said crank members,

(*f*) adjustable link means pivotally connecting opposite ends of the crank members with a related door at the same pivot point at which said hinge arms are connected to said doors,

(*g*) stop means on the car frame for engagement with said crank members to prevent overthrow thereof from their normal locked position,

(*h*) a crank shaft secured to the car frame beneath the center sill and having a pair of flat portions operating in the slots of said cranks, the width of said slots being greater than the width of the flat portions of said shaft to provide balancing of the forces acting on the door surfaces,

(*i*) a worm gear secured to the crank shaft, a worm in constant engagement with said worm gear, and operating shafts extending laterally from said worm to opposite sides of the car,

(*j*) whereby upon rotation of said operating shafts to move the doors to closed position, said crank members and the adjustable link means connected there-

with are moved to a position over-center relative to the longitudinal axis of said crank shaft, thus locking the doors in closed position and balancing the force exerted by the weight of the lading when the car is loaded on the doors around the periphery of said doors to form a fluid tight seal with the gasket means surrounding the hopper openings.

References Cited in the file of this patent

UNITED STATES PATENTS

672,076	Cowell	Apr. 16, 1901
693,132	Heiden	Feb. 11, 1902
731,525	Trapp	June 23, 1903
743,504	Hart	Nov. 10, 1903
746,519	Johnson	Dec. 8, 1903
886,380	Lindstrom	May 5, 1908
956,819	Neikirk	May 3, 1910
984,105	Probes	Feb. 14, 1911
1,136,317	Clark	Apr. 20, 1915
1,155,938	Lindstrom	Oct. 5, 1915
1,295,246	Weaver	Feb. 25, 1919
1,297,356	Junghanns	Mar. 18, 1919
1,368,372	Test	Feb. 15, 1921
1,482,559	Hart	Feb. 5, 1924
1,515,834	Campbell	Nov. 18, 1924
1,765,519	Zimmer	June 24, 1930
1,771,832	Andres	July 29, 1930
1,798,549	McDonald	Mar. 31, 1931