May 19, 1964 C. STOLL ETAL 3,133,763

CHAIR WITH ADJUSTABLE SPRING MEANS

Filed Jan. 5, 1962 2 Sheets-Sheet 1

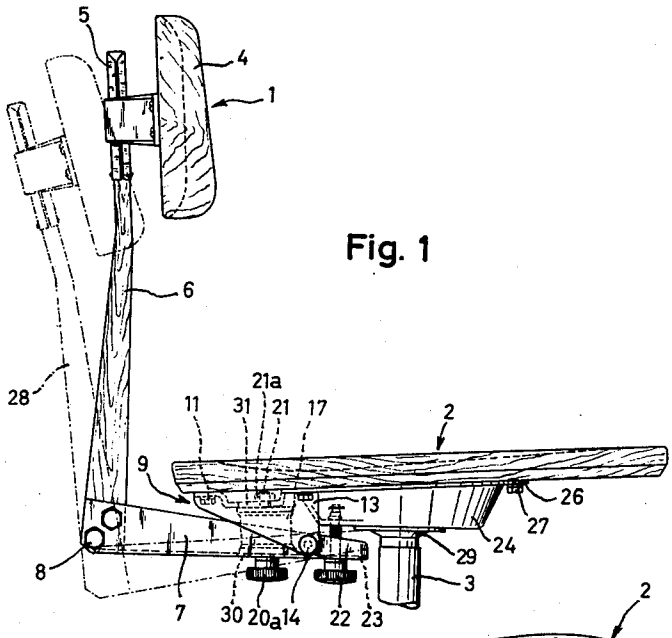

Fig. 1

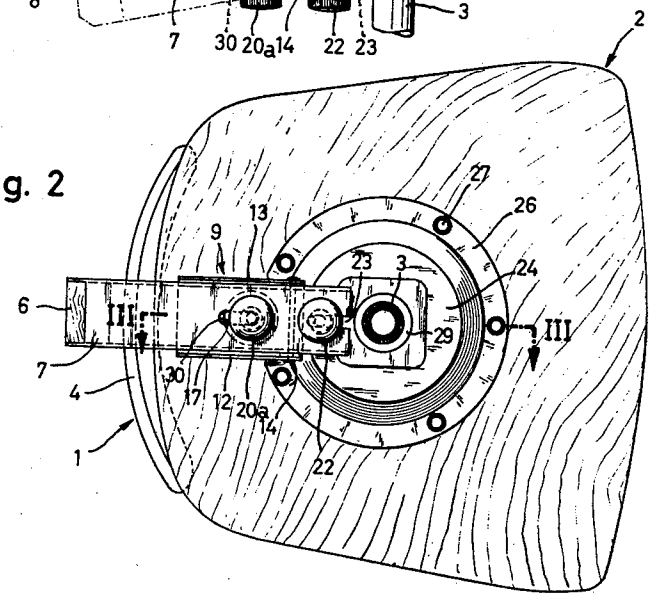

Fig. 2

INVENTORS:
Christof Stoll
Theodor Günther
BY George H. Spencer
ATTORNEY

CHAIR WITH ADJUSTABLE SPRING MEANS

Filed Jan. 5, 1962 2 Sheets-Sheet 2

Fig. 3

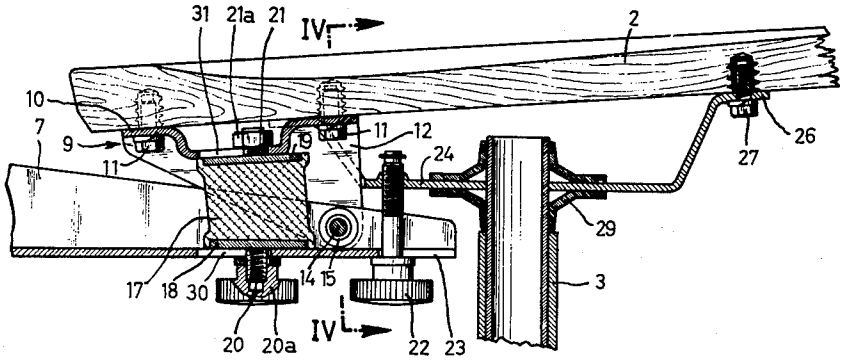

Fig. 4

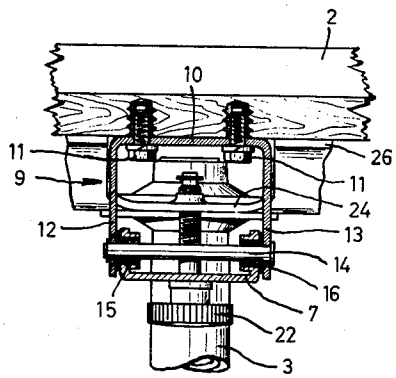

INVENTORS:
Christof Stoll
Theodor Günther
BY George H. Spencer
ATTORNEY

United States Patent Office

3,133,763

Patented May 19, 1964

1

3,133,763
CHAIR WITH ADJUSTABLE SPRING MEANS

Christof Stoll, Indiekoferweg 19, and Theodor Günther, Schmitzingerstr. 18, both of Waldshut, Baden, Germany

Filed Jan. 5, 1962, Ser. No. 164,450
Claims priority, application Germany Jan. 14, 1961
12 Claims. (Cl. 297—304)

The present invention relates generally to the furniture art, and, more particularly, to a swivel chair having a seat supported upon a shaft, with a back rest carrier resiliently connected to the seat.

In known swivel chairs of this type, the back rest carrier has an inwardly projecting portion which is usually connected to the seat by flat or blade springs of steel or the like.

It is an object of the present invention to provide a swivel chair which has a softer, more flexible, and less rigid resilient connection of the movable back than do the known swivel chairs.

Another object of this invention is to provide a chair of the type described which may be manufactured by simple and less expensive means and with a saving of material as compared to prior chairs of this type.

These objects and others ancillary thereto are accomplished according to preferred embodiments of the invention wherein the back rest carrier is pivoted to the seat plate at the underside or below the seat, and a resilient member is arranged between the seat plate and the back rest carrier. This resilient member is arranged on the opposite side of the bearing, which pivotally connects the back rest carrier to the seat plate from the supporting shaft on which the seat plate is mounted. This resilient member is placed under tensile stress when the back rest carrier is moved rearwardly. Such a resilient member may be constructed of rubber, for example. This resilient member may be connected with one end or surface on the underside or surface of the seat plate and with the opposite end or surface connected to the upper end or surface of the inwardly bent end of the back rest carrier, hereinafter referred to as the mounting bracket or rail. In an expedient arrangement the resilient member includes plates of metal or the like which are connected by vulcanization to the ends of the elastic member, which is preferably cylindrical. Such plates are connected with the underside of the seat plate and the top of the mounting bracket by threaded connections.

It is advantageous for the back rest carrier to be arranged in two parts including a preferably metallic mounting bracket or rail which extends in a substantially horizontal direction, and a substantially vertically extending carrier portion which is preferably constructed of wood and fixed to the bracket at substantially right angles. This design of the back rest carrier simplifies the manufacture because one portion is constructed of metal and the other portion is constructed of wood. Due to this arrangement there is no longer a need for bending hard wood which is necessary in known swivel chairs, and which is difficult and has the attendant disadvantage of a comparatively large amount of waste. Material may thus be saved by using the present invention. Moreover, there is no danger that the shape of the back rest carrier will change under the influence of weather conditions, especially the angle between the vertical back rest carrier part and the mounting bracket part.

2

In the arrangement according to the present invention, the mounting bracket may be U-shaped in cross section and have openings in the sides thereof for receiving the ends of the bearing bolt which is rigidly connected with the seat plate. Bushings of synthetic resin may be arranged in the openings for receiving the ends of the bearing bolt. The bearing bolt is supported in the sides or legs of a U-shaped supporting bracket which is fastened to the bottom of the seat plate.

The resilient member is preferably arranged between the legs of the U-shaped supporting bracket which is fastened to the seat plate and the mounting bracket of the back rest carrier. Elongated openings may be provided in both legs, through which displaceable fastening elements for the resilient member are disposed. The resilient member may be clamped at the mounting bracket by means of a nut and preferably one of the type having an enlarged head which may be considered as a handwheel having a nut thread.

A displaceable stop may be provided for fixing the position of the back rest carrier in the unstressed condition. This stop is connected to a part which is rigidly connected with the seat plate. The free end of the mounting bracket abuts against this stop in the unstressed condition.

A supporting column is received in the supporting shaft, and a dished supporting disk is connected at the upper end thereof, which, in turn, is fastened at its peripheral edges to the undersurface of the seat plate. The upwardly extending portions of the dish-like supporting disk may be provided with a recess for accommodating the height adjusting lever of the seat plate.

Additional objects and advantages of the present invention will become apparent upon consideration of the following description when taken in conjunction with the accompanying drawings in which:

FIGURE 1 is a side elevational view of the swivel chair of the present invention, with the reclining position of the back rest carrier being indicated in phantom lines.

FIGURE 2 is a bottom view of the chair illustrated in FIGURE 1.

FIGURE 3 is a vertical sectional view taken substantially along the plane defined by line 3—3 of FIGURE 2.

FIGURE 4 is a vertical sectional view taken substantially along the plane defined by line 4—4 of FIGURE 3.

With more particular reference to the drawings, the swivel chair according to the present invention is provided with a back **1**, a seat assembly **2**, and a supporting shaft **3**, which is supported by a leg section. The latter is not shown, since it is conventional and does not comprise any part of the present invention.

The seat, at a first point, is mounted on the supporting shaft **3**, and the back **1** is provided with inwardly bent portions or mounting brackets, by which it is resiliently and movably fastened to the seat. At the upper end of the back **1**, a back plate **4** is fastened, as shown at **5**. The upwardly extending portion of back **1** is covered at the upper end with sheet metal and is fastened, in the customary manner, for example, by screws and the like. The back **1** is constructed of a wooden slat **6** extending substantially parallel to the supporting shaft **3** and which has a metal rail or mounting bracket **7** connected thereto at substantially right angles. As may be seen more particularly in FIGURE 4, the bracket **7** is substantial-

ly U-shaped in cross section and is connected to the wooden slat 6 by means of rivets, bolts, or the like, as indicated at 8. This mounting bracket is fastened to the undersurface of the seat at a second point. An elongated opening 30 is provided through the web portion of metal rail 7 and is spaced slightly inwardly of the free end thereof, the purpose of this arrangement being explained below.

A supporting bracket or fitting 9 is fastened to the bottom of seat 2 and is of substantially U-shaped cross section, as indicated in FIGURE 4. The upper leg or web section 10 is connected with the seat plate by four screws 11, and this portion is provided with a depressed central part which itself has an elongated opening 31. The parallel legs 12 and 13 are connected together at their lower free ends by means of a swivel pin 14 which serves to support the back rest carrier. Bearing bushings 15 and 16 of synthetic resin, as, for example, polyamide, are arranged at the ends of the swivel pin 14. In the vicinity of the swivel pin 14 which passes through the upstanding legs of rail 7, the rail 7 is reinforced. The arrangement is such that the connection between the back rest carrier and the fitting is movable and the two parts may be easily swiveled with respect to each other.

The seat 2 and the inwardly extending rail 7 of the back rest carrier have a rubber cylindrical body 17 connected therebetween, this body being designed as a tensile stress-responsive resilient spring member between the back rest carrier and the seat. This rubber body is connected to the seat at a third point and resiliently and yieldably cushions the seat and back rest carrier with respect to each other, this third point being spaced from the second point, i.e., the point at which the back rest carrier is pivotally connected to the underside of the seat means, in a direction opposite to that which the first point, i.e., the point at which the shaft engages the seat means, is spaced from the second point. Rubber cylinder 17 is disposed with its axis extending substantially parallel to the axis of the supporting shaft and forms approximately a right angle with the seat surface.

Metal plates 18 and 19 are arranged at the ends of the rubber cylinder and are suitably attached as, for example, by vulcanization. A screw bolt 20 extends through the opening 30 of rail 7 and a screw bolt 21 extends through the opening 31 of the fitting 9; these bolts are attached to the metal plates, so that the cylinder 17 as a whole is mounted to form a unitary arrangement. The screw bolts are provided with nuts 20*a* and 21*a* so that the back rest carrier and the seat are connected with each other in a detachable and adjustable manner. It is thus possible to adjust the height or lift or rearward position of the back rest simply by displacing the rubber cylinder 17 along the openings 30 and 31.

The adjusting screw 22 adjusts the back rest carrier relative to the seat. This adjusting screw extends through the rail 7 of the back rest carrier which is provided with a recess 23 in this location. This adjusting screw is threaded into a dished supporting disk 24 which is connected with the seat. Displacing the adjusting screw in an axial position by rotating the screw will adjust the position of the back rest relative to the seat. Thus, the adjusting screw fulfills the function of the rigid stops used hitherto in known swivel chairs or swivel arm chairs by means of which the movement of the back plate relative to the seat is limited in both directions. The back rest is angularly displaceable with respect to the seat. By means of rotational action due to the weight of a reclining person, the back rest may be moved into the position illustrated in phantom lines 28 in FIGURE 1, in a manner which is known per se.

The dish shape of the supporting disk 24 is such as to give it a lower central portion which is fastened to the supporting shaft 3. The peripheral edge 26 of disk 24 is screwed to the undersurface of the seat plate at 27.

The central portion of the supporting disk 24 is connected at 29 with the supporting shaft in such a manner that the seat may be swiveled about the shaft. In this manner, the general over-all design of the chair is simplified as compared to known chairs or arm chairs in which the seat carrier plate is placed as a flat plate on wooden ledges which, in turn, are screwed onto the seat. This novel design is simpler and requires less structural elements.

It will be understood that the above description of the present invention is susceptible to various modifications, changes, and adaptations, and the same are intended to be comprehended within the meaning and range of equivalents of the appended claims.

What is claimed is:

1. In a swivel chair, the combination which comprises: seat means; a back rest carrier; means pivotally connecting said carrier to the underside of said seat means; and resilient means disposed between said seat means and said back rest carrier for biasing said back rest carrier toward its rest position when it is moved from such position, the position of said resilient means being selectively adjustable toward and away from said connecting means for changing the amount of biasing of said resilient means.

2. In a swivel chair, the combination which comprises:

(*a*) an upright supporting shaft;

(*b*) seat means supported by said shaft, said shaft engaging said seat means at a first point thereof;

(*c*) a back rest carrier pivotally connected to the underside of said seat means at a second point thereof which is spaced from said first point; and

(*d*) tensile stress-responsive resilient means interposed between said back rest carrier and said seat means and being connected to the latter at a third point thereof which is spaced from said second point in a direction opposite to that which said first point is spaced from said second point, whereby said resilient means are placed under tensile stress when said back rest carrier is pivoted rearwardly, the position of said resilient means being selectively adjustable toward and away from said second point for changing the tensile stress under which said resilient means are placed for a given amount of movement of said back rest carrier.

3. The combination as defined in claim 2, wherein said carrier includes a member directed inwardly below said seat means, and said resilient means include a cylindrical body, metal plates vulcanized to the ends of said body, and threaded connections attaching said plates to said underside of said seat means and said top of said member.

4. The combination as defined in claim 2, wherein said back rest carrier includes a metal rail disposed substantially horizontally and a wooden slat disposed substantially vertically so that said rail and slat are connected at about right angles.

5. The combination as defined in claim 4, further comprising a bolt pivotally connecting said back rest carrier and said seat means, said rail being U-shaped in cross section and having legs with openings therein, the openings receiving the ends of said bolt, and said bolt being rigidly connected with said seat means.

6. The combination as defined in claim 5, further comprising bushings of synthetic resin in said openings and receiving the ends of said bolt.

7. The combination as defined in claim 5, wherein said seat means includes a U-shaped supporting bracket fastened to said underside of said seat means, said bolt being supported in the legs of said supporting bracket.

8. The combination as defined in claim 7, wherein said resilient means are disposed between the legs of said supporting bracket.

9. The combination as defined in claim 8, further comprising a fastening element on each end of said resilient means, and elongated openings in the web portions of said U-shaped rail and said supporting bracket through which said fastening elements displaceably extend.

10. The combination as defined in claim 9, wherein the

fastening element passing through the rail opening is threaded, and a handwheel having a nut portion for clamping the elastic means to said rail.

11. The combination as defined in claim 4, wherein said seat means includes a rigidly connected element, and a displaceable stop connected to said element and arranged so that the inner end of said rail abuts thereagainst for determining the position of said back rest carrier in the unstressed state.

12. The combination as defined in claim 2, wherein said seat means includes a dished disk having an upwardly extending portion which is provided with a recess for

accommodating a height adjusting lever for said seat means.

References Cited in the file of this patent

UNITED STATES PATENTS

1,359,145	Atwood	Nov. 16, 1920
2,188,605	Herold	Jan. 30, 1940
3,034,828	Kurihara	May 15, 1962

FOREIGN PATENTS

121,416	Sweden	Apr. 13, 1948