April 28, 1964 C. A. CARKIN ETAL 3,130,914

DEVICE FOR INTIMATELY MIXING FLUENTS AND DISCHARGING THE MIXED FLUENTS AS A JET

Original Filed Feb. 28, 1958

Fig. 1.

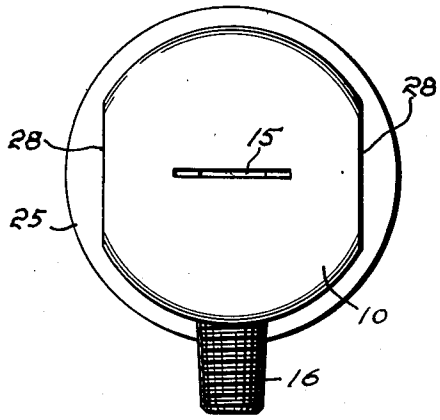

Fig. 2

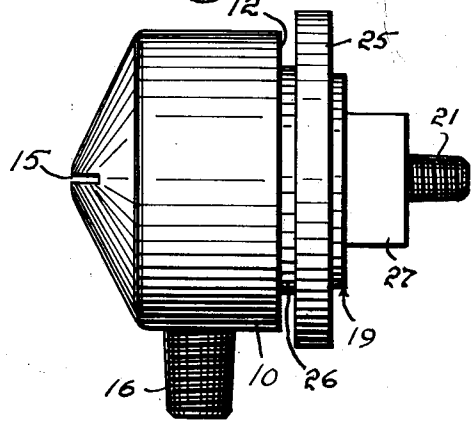

Fig. 3.

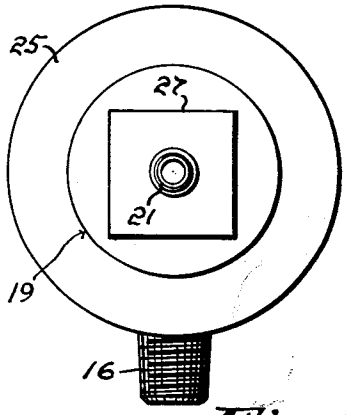

Fig. 4.

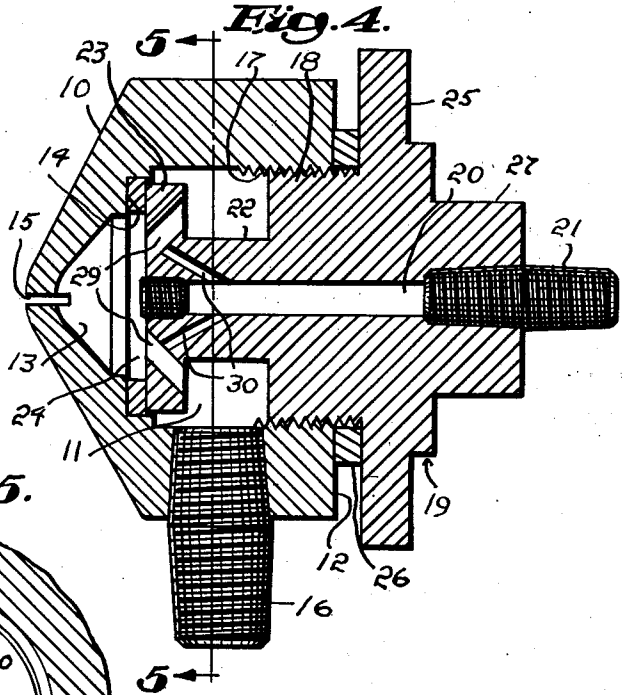

Fig. 5.

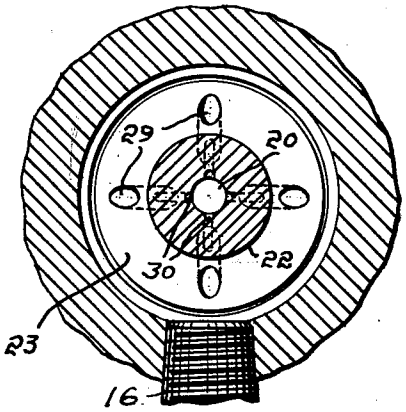

Inventors:
Clarence A. Carkin,
Arthur T. Greenslade, Jr.,
Robert D. Lambert,
by
Attorney

United States Patent Office

3,130,914

Patented Apr. 28, 1964

1

3,130,914

DEVICE FOR INTIMATELY MIXING FLUENTS AND DISCHARGING THE MIXED FLUENTS AS A JET

Clarence A. Carkin, Tyngsborough, Arthur T. Greenslade, Jr., Westford (Forge Village), and Robert D. Lambert, Tyngsborough, Mass., assignors to C. G. Sargent's Sons Corp., Graniteville, Mass., a corporation of Massachusetts

Continuation of application Ser. No. 718,167, Feb. 28, 1958. This application Jan. 11, 1962, Ser. No. 166,985
4 Claims. (Cl. 239—425)

The present invention relates to devices for use in intimately mixing and delivering in jets, fluents of which at least one is under pressure, and this application is a continuation of our co-pending application, Serial No. 718,167, filed February 28, 1958 and now abandoned.

While many other examples could be given of operations requiring that two or more fluents be intimately mixed and delivered as a jet, the invention is herein discussed primarily with reference to sprayers and humidification, generally, and particularly to the reordering of tobacco. When the moisture content of tobacco is to be brought up to a desired level, it is necessary to deliver accurately into the conditioning apparatus, at spaced zones, large volumes of atomized water without objectionable fall out.

In accordance with the invention, a device for intimately mixing fluents comprises a chamber having an exit with which a series of passages are in communication and arranged in such a converging relation that streams therethrough intersect within the chamber. Each of a second series of passages is in ejector defining communication with an appropriate one of the first named passages ensuring effectively mixed streams that intersect in the chamber. The resulting turbulence ensures that the jet discharged through the exit is a complete mixture.

With such a device, in spraying or in humidification, for example, the passages of the first series are for the fluent under the most pressure, steam or air, and are usually larger in diameter than the passages of the second series which, typically, are for water or an aqueous solution. In operation, the ejector relationship between the passages of the two series ensures effective atomization of the water. In some cases, the relationship between the pressure on the fluents and the dimensions of the exit may advantageously be such that there is a pressure build-up in the chamber. The exit may be one or more apertures of any shape but for many uses, a single slot is preferred.

In the accompanying drawings, there is shown an illustrative embodiment of the invention from which and the ensuing discussion these and other of its objectives, novel features, and advantages will be readily apparent.

In the drawings:

FIGURE 1 is a front view of an ordering head in accordance with the invention,

FIGURES 2 and 3 are, respectively, side and rear views thereof,

FIGURE 4 is a longitudinal section, on an increased scale, and

FIGURE 5 is a fragmentary section taken approximately along the indicated lines 5—5 of FIGURE 4.

In the embodiment of the invention shown in the drawings, the head consists of a cap **10** provided with a cavity having a cylindrical portion **11** opening through the machined rear face of the cap which defines a seat **12**, a portion **13**, shown as forwardly and inwardly tapering, and an intermediate annular seat **14**. The front of the cap **10** has an exit slot **15** in communication with the cavity portion **13** while a radially disposed nipple **16**

2

threaded through the side of the cap effects communication with the cavity portion **11**.

The rear part of the cavity portion **11** is threaded as at **17** to receive the threaded plug part **18** of a generally indicated member **19** having an axial bore **20** opening through the rear end thereof and having threaded therein a nipple **21**.

Forwardly of the plug part **18**, the member **19** has a section **22** of reduced diameter and an end flange **23** shaped and dimensioned to engage and compress a seal **24** against the seat **14**. The cavity portions **11** and **13** are thus separated to provide forward and rearward chambers indicated at **11*a*** and **13*a*** respectively in FIGURE 4. Rearwardly of the plug part **18**, there is a flange **25** for compressing the seal **26** against the seat **12**. Adjacent the rear end of the member **19** there is a square part **27** of reduced cross sectional dimensions to enable it to be gripped and turned with a wrench and it will be noted that the cap **10** has diametrically opposed flat zones **28** to enable it to be securely held in a vise.

The end flange **23** is provided with a series of forwardly converging passages **29** whose axes intersect within the chamber **13**. A series of passages **30**, smaller in size than the passages **29**, are in communication with the bore **20** and these forwardly diverge with each opening into an appropriate one of the passages **29** between the ends thereof. The jets **29** discharge into the cavity portion **13**, and impinge within the portion **13** in the nature of free jets of entrained fluid, that is, the jets of entrained fluid are only confined by the cavity **13**.

In practice, a steam line, not shown, is connected to the nipple **16** and a water line, not shown, is connected to the nipple **21** and a fan-shaped jet of fog is delivered through the exit slot **15** as the interconnection of the two series of passages ensures an effective ejector relationship resulting in the atomization of the water. In the chamber **13**, the intersecting of the converging streams results in turbulence ensuring that the jet discharged through the slot **15** is thoroughly mixed.

We claim:

1. A head for use in intimately mixing fluents of which one is under pressure and for delivering them as a jet, said head comprising a cap member including first and second axially spaced seats and an end wall having an exit, said cap member having a cavity opening through said first seat and in communication with said exit and a port in communication with said cavity between said seats and a second member including first and second flanges, each for an appropriate one of said seats and sealed thereto, said first flange dividing said cavity into forward and rearward portions, and said first flange also having a series of forwardly converging passages effecting communication between said cavity portions arranged and disposed so that streams therethrough are free jets, the zone of intersection of said converging passages being spaced from said exit to permit mixing turbulence within said forward cavity portion against substantially the entire end wall, said second member having a conduit opening through its rear end and a series of forwardly diverging passages having their inner ends in communication with said conduit and each of their outer ends in communication with an appropriate one of said converging passages.

2. A head for use in intimately mixing fluents of which one is under pressure and for delivering them as a jet, said head comprising a cap member including first and second axially spaced seats and an end wall having an exit, said cap member having a cavity opening through said first seat and in communication with said exit and a port in communication with said cavity between said seats and a second member including first and second flanges, each for an appropriate one of said

seats and sealed thereto, said first flange dividing said cavity into forward and rearward portions, and said first flange also having a series of forwardly converging passages effecting communication between said cavity portions arranged and disposed so that streams therethrough are free jets, the cross sectional area of said forward cavity portion being greater in the zone of the intersection of said converging passages than the area defined by the outlet end, the zone of intersection being spaced from said exit to permit mixing turbulence within said mixing chamber against substantially the entire end wall thereof, said second member having a conduit opening through it rear end and a series of forwardly diverging passages having their inner ends in communication with said conduit and each of their outer ends in communication with an appropriate one of said converging passages.

3. In a device for use in intimately mixing fluents of which at least one is under pressure and for delivering them as a jet, a cap member having a chamber, said cap member including an end wall having an exit, and a second member within and attached to said cap member in spaced relationship to said exit and said wall, said second member having a first series of converging passages in communication with said chamber, and so converging that streams therethrough are free jets which intersect therein to effect their atomization through impingement, and a second series of passages each in communication with an appropriate one of the passages of said first named series in ejector establishing relation thereto, the intersection of the streams within said chamber being spaced from said exit to effect a mixing turbulence within said chamber and against substantially the entire wall thereof.

4. In a device for use in intimately mixing fluents of which at least one is under pressure and for delivering them as a jet, a cap member having a chamber, said cap member including an end wall having an exit, and a second member within and attached to said cap member in spaced relationship to said exit and said wall, said second member having a first series of passages in communication with said chamber, and so converging that streams therethrough are free jets which intersect therein to effect their atomization through impingement, and a second series of passages each in communication with an appropriate one of the passages of said first named series in ejector establishing relation thereto, the intersection of the streams within said first chamber being spaced from said exit to effect a mixing turbulence within said chamber and against substantially the entire wall thereof, and the cross sectional area of said chamber, between the zone of such intersection and said exit, being greater than the cross sectional area defined by the outlets of the converging series of passages.

References Cited in the file of this patent

UNITED STATES PATENTS

1,527,913	Payne	Feb. 24, 1925
2,815,069	Garraway	Dec. 3, 1957
2,854,285	Barton	Sept. 30, 1958