April 7, 1964 H. A. INTO ETAL 3,127,812

GAS SYSTEM FOR FIREARMS

Filed June 14, 1962

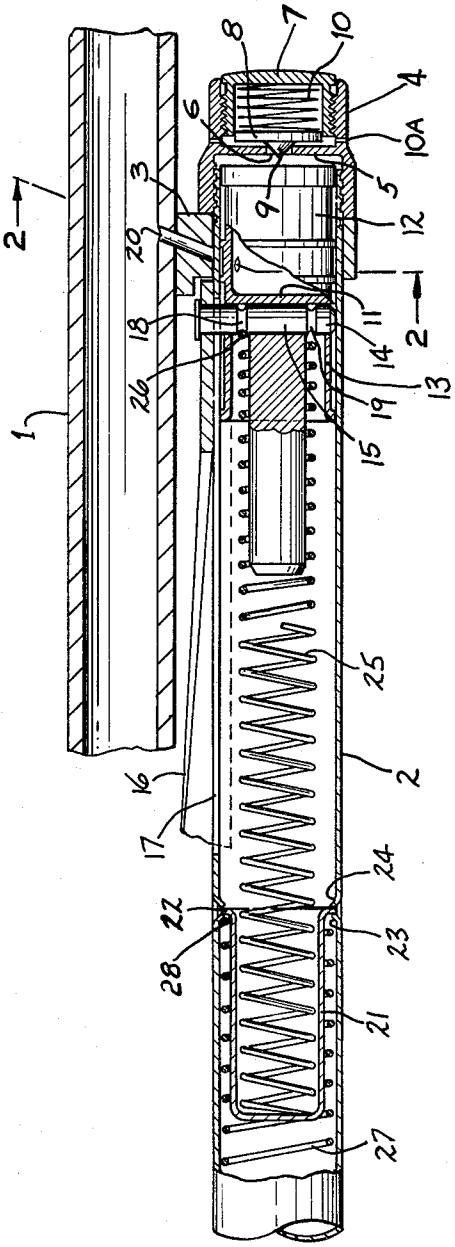

FIG - 1

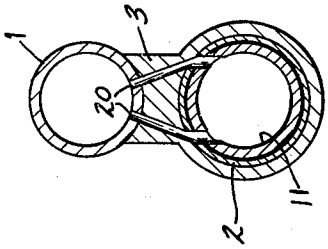

FIG - 2

INVENTORS:
DAVID F. BUTLER
HENRY A. INTO
BY Donald R. Motsko

United States Patent Office

3,127,812

Patented Apr. 7, 1964

1

3,127,812
GAS SYSTEM FOR FIREARMS

Henry A. Into, Wallingford, and David F. Butler, Hamden, Conn., assignors to Olin Mathieson Chemical Corporation, a corporation of Virginia

Filed June 14, 1962, Ser. No. 202,510
6 Claims. (Cl. 89—193)

This invention relates to a gas system, which may be used in autoload firearms to actuate the gun action.

In firearms of the autoload gas operated type; gases are tapped from the barrel and led into a tubular chamber wherein they propel a gas piston along the chamber. One or more slide arms are connected at one end to the gas piston and at the other end to the gun action. Movement of the piston along the tubular chamber is thus effective to operate the gun action.

It is conventional to locate the gas system in the magazine tube which is usually positioned below the barrel. Since the magazine tube must house the cartridges, the tube follower, the follower spring as well as the gas system; it has heretofore been necessary to lengthen the magazine tube to such an extent as to create a problem. It is desirable to keep the magazine tube less than half the length of the barrel; yet it is desirable to give the magazine tube as great a cartridge carrying capacity as practicable while providing space for all other necessary elements.

It is therefore an object of this invention to provide novel means for positioning a gas system in a magazine tube so as to utilize the available space in such a manner as to give maximum compactness to the tube without impairing its cartridge carrying capacity.

It is also necessary in firearms utilizing a gas system to provide means to regulate the energy which is transmitted to the gas piston. This is especially necessary in firearms which are adapted to fire a variety of types of ammunition, each of which develops a different pressure in the barrel. It has also been found that the pressure developed by cartridges of the same type also vary. Various means have been devised in the art to regulate the gas pressure transmitted to the gas piston. All have had certain obvious disadvantages.

Those gas pressure regulating systems which have been automatic in operation have been relatively complicated and subject to malfunction.

Those gas regulating systems which are manually adjustable for cartridges of different types are disadvantageous because it is necessary to manually adjust them every time a different type cartridge is used. The average person often forgets to perform this adjustment and a malfunction of the gun occurs which may be dangerous to the shooter and detrimental to the condition of the gun.

It is therefore an object of this invention to provide in a gas system for firearms; means for regulating the gas pressure transmitted to the piston which is automatically adjustable, simple in design, and positive in operation.

It is a further object of this invention to provide a gas pressure regulating means which is also self cleaning.

These and other objects and advantages of the gas system of this invention will become more readily apparent from the following detailed description and the drawings in which:

FIGURE 1 shows a sectional side view of the gas system of this invention.

FIGURE 2 is a sectional view taken along the line 2—2 of FIG. 1.

FIGURE 1 shows a barrel, generally designated 1, secured at one end to a receiver (not shown) and extending outwardly therefrom. Mounted below the barrel is a magazine tube generally designated 2. One end of

2

the magazine tube is secured to the receiver (not shown) and extends outwardly therefrom in general alignment with said barrel. A bracket 3 provides a connection between the barrel and the magazine tube. Magazine tube 2 is generally cylindrical in shape and its forward end is closed by an end cap 4. End cap 4 is provided with a partition 5 having an aperture 6 therein. A valve cap 7 is attached by screw threads or other equivalent means to end cap 4 and closes the end cap. Interposed between the valve cap 7 and the partition 5 is a poppet valve 8 having a conical nose portion 9. A spring 10 is interposed between poppet valve 8 and valve cap 7 and forces the poppet valve inwardly toward the partition 5, so that conical nose 9 normally closes and seals the aperture 6. A plurality of apertures 10A are formed in the end cap 4 to provide a passageway from the interior of the magazine to the atmosphere. At a predetermined pressure, poppet valve 8 is adapted to compress spring 10 and to open aperture 6. This pressure may be on the order of 300 p.s.i. but can be adjusted by selecting a different spring. As soon as the valve disc 8 moves off its seat, the gas pressure can act on a greatly increased area and moves the valve disc to a fully open position, venting the interior of the magazine to the atmosphere. One of the advantages of this system is that the valve remains either fully shut or substantially open, so that when low power loads are fired, no gas leakage occurs and all of the gas is available to operate the system. When powerful loads are fired, the recoil forces assist in operating the moving members of the shotgun system, and less gas force is required. This gas valve, once opened, moves to a position where a substantial proportion of the gas is vented, and the system thereby compensates for the difference in energy of the different types of ammunition.

The conical nose portion of poppet valve 18 provides for self cleaning of the aperture 6 since no dirt will tend to accumulate on the conical surface. As the valve opens, the gas tends to blow the conical surface and the aperture clean. A piston 11 is slidably mounted in the forward portion of the magazine tube. Piston 11 has a hollow head 12 opening towards the partition 5 and a cylindrical rearwardly extending skirt 13. The skirt 13 has a vertical aperture 14 extending downwardly therethrough. Aperture 14 is adapted to accommodate a vertically extending piston pin 15. Piston pin 15 connects a pair of slide bars 16 (only one of which is shown in the drawing) to the piston 11. An elongated slot 17 in the upper portion of the magazine tube allows piston pin 15 to move rearwardly with piston 11. Piston pin 15 is provided with a pair of circumferential grooves 18 and 19, the purpose of which will be described later. A passageway 20 interconnects the interior of the barrel 1, with the interior of the hollow head 12 of piston 11. The passageway 20 may comprise a plurality of individual passages radiating outwardly from the centerline of the bore as shown in FIGURE 2. With this arrangement, the same gas system can be used unmodified with gun barrels of different gauge.

Positioned intermediate the ends of the magazine tube 2 is a cup shaped return spring support 21. Return spring support 21 has an outturned flange portion 22 in engagement with the walls of the magazine 2. The magazine tube 2 has cut-out portions 23 and 24 crimped inwardly to engage the flange 22 and to lock the return spring support 21 securely in place. Interposed between the piston 11 and the return spring support 21 is a return spring 25. Return spring 25 is supported at one end by insertion into the cup shaped portion of return spring support 21 and at the other end by insertion into the skirt 13 of the piston 11. The end coil 26 of return spring 25 is adapted to engage in grooves 18 and 19 of

piston pin 15 (as shown) to interlock the piston pin securely in place. Spring 25 thus performs the function of a return spring as well as an interlocking member for the piston pin 15.

Positioned between flange 22 and the magazine follower (not shown) is a magazine spring 27. End coil 28 of magazine spring 27 abuts against flange 22 which acts as a stop member for one end of the spring. Spring 27 is dimensioned so that it concentrically surrounds the cup shaped portion of return spring support 21 and the return spring 25. With the concentric overlapping of springs 25 and 27, it is possible to provide for the maximum utilization of the space available in the magazine tube without compromising the length of the springs necessary to provide a given spring force. The return spring support functions to support one end of the return spring 25 internally, and one end of the magazine spring 27 externally. Since a given length of spring is necessary to provide a given spring force; the arrangement described above allows the use of springs of a given length without necessitating an increase in the overall length of the magazine tube.

The novel spring support 21 thus provides for the maximum utilization of the space available in a magazine to accommodate the elements of a gas system as well as the maximum number of cartridges.

The operation of the gas system will now be described in detail.

As a cartridge passes the gas opening in the barrel 1, gases proceed through the passageway 20 into the head portion 12 of the piston 11. Gas pressure builds up between the piston and the partition 5 which is sufficient to propel the piston rearwardly towards return spring support 21. The movement of the piston 11 rearwardly propels the slide bar 16 rearwardly through the interconnection of piston pin 15 with the piston 11 and the slide bar 16. The rearward movement of slide bar 16 actuates the gun action (not shown). As the piston moves rearwardly, it compresses return spring 25. Return spring 25 is effective to return the piston to its initial position once the gas pressure has been sufficiently reduced.

Valve 8 is operative should the gas pressure transmitted to the piston be excessively, to compress spring 10 and vent the interior of the magazine to the atmosphere through apertures 6 and 10A, by selecting the proper spring 10; the force necessary to automatically vent the magazine can be predetermined and regulated.

As noted above, return spring 25 functions not only to return the piston 11 to its initial position but further functions as a retaining member for the piston pin 15.

The return spring support 21 functions to support one end of the return spring 25 and also to support one end of the magazine spring 27. Return spring support 21 further functions as the partitioning member between the return spring 25 and the magazine spring 27.

Although this application has been described in detail with reference to the particular embodiment shown in the drawing, it is anticipated that certain modifications and design changes can be made, which will be within the scope of the appended claims.

What is claimed is:

1. In an autoload firearm having a barrel, a magazine tube mounted below said barrel, piston means slidably mounted in the forward end of said magazine, a cup shaped spring support having an outturned flange at one end mounted intermediate the ends of said magazine, the cup shaped portion of said spring support being spaced inwardly from the side walls of said magazine, return spring means interposed between said piston and said spring support, one end of said return spring being positioned within said cup shaped support and the opposite end of said return spring being positioned within a hollow skirt portion of said piston, a magazine spring interposed between said spring support and the rearward end of said magazine, one end of said magazine spring abutting said outturned flange and being concentrically positioned around the cup shaped support and the portion of the return spring positioned in said cup shaped support.

2. In an autoload firearm having a barrel and a tubular magazine mounted below said barrel, a piston slidably mounted in the forward end of said magazine, conduit means providing a gas path from the interior of said barrel to the piston, pin means interconnecting said piston with a pair of slide arms, an end cap closing the forward end of said magazine, a passageway in said end cap extending from the interior of the magazine tube to the atmosphere, a partition member having an opening defining a valve seat positioned in said passageway, a poppet valve terminating in a conical nose portion mounted in said end cap, spring means normally urging said conical nose portion into line contact sealing engagement with said valve seat to close said passageway, said poppet valve being responsive to a predetermined pressure acting on said conical nose portion to move away from said valve seat and open said passageway.

3. The device of claim 2 in which said conduit means is a plurality of individual passageways radiating outwardly substantially from the centerline of the barrel and communicating with corresponding passageways in said magazine.

4. In a firearm including a barrel, a tubular magazine mounted below said barrel, a gas operated piston slidably mounted in the forward end of said magazine, a return spring mounted in said tubular magazine normally urging said piston towards the forward end of said tubular magazine, an end cap closing said forward end of said tubular magazine, said end cap including a partition member formed between said gas piston and an end wall of said end cap, conduit means providing a gas path from the interior of said barrel to said piston, said partition having a first aperture formed therein opening to the interior of said magazine, at least one second aperture formed in the side wall of said end cap, said first and second apertures providing a vent extending from the interior of said magazine to the atmosphere operative to vent excess gas pressures transmitted to the piston from said barrel, a poppet valve having a conical nose portion positioned in said end cap between said end wall and said partition member, spring means normally urging said conical nose portion into sealing engagement with said first aperture to close said vent, said conical nose portion extending partially into said first aperture to provide line contact between said conical nose portion and the boundaries of said first aperture, said poppet valve being operative to move quickly away from said partition and open said vent when gas pressure in excess of a predetermined value acts on said conical nose portion.

5. In a firearm including a barrel, a tubular magazine mounted below the barrel, a gas operated piston slidably mounted in the forward end of said magazine, an end wall closing said forward end of the tubular magazine, conduit means providing a gas path from the interior of said barrel to said piston, a return spring mounted in said tubular magazine normally urging said piston towards the forward end of said tubular magazine, a partition formed between said end wall and said piston, said partition having a first aperture formed therein, at least one second aperture formed in the side wall of said magazine, said first and said second apertures providing a vent to the atmosphere for excess gas pressures transmitted from the barrel to said piston, a poppet valve positioned between said end wall and said partition, said poppet valve including a conical nose portion directed toward said first aperture, spring means normally urging said conical nose portion into sealing engagement with said first aperture closing said vent, said conical nose portion extending partially into said first aperture

to provide line contact between said conical nose portion and the boundaries of said aperture, said poppet valve being responsive to gas pressure in excess of a predetermined value acting on said conical nose portion to move toward said end wall thereby opening said vent.

6. In an autoload firearm, a barrel, a magazine tube mounted below said barrel, a gas actuated piston slidably mounted in the forward end of said magazine tube, conduit means extending from said barrel to said piston, automatic relief valve means mounted in said magazine tube operative to vent excessive gas pressure transmitted from said barrel to said piston, an annular skirt formed integral with said gas piston and extending rearwardly in said magazine tube, a return spring normally urging said gas piston toward the forward end of said magazine tube, one end of said return spring being concentrically positioned in said annular skirt, slide arm means having a forward end extending between said barrel and said magazine tube, a slot formed in the upper surface of said magazine tube, said forward end of said slide arm means

having an opening therein to accommodate a pin, a pin extending downwardly through said opening, said slot and completely through said annular skirt so that the intermediate portion of said pin is positioned inside said annular skirt, at least one recess formed in said intermediate portion of said pin, said one end of said return spring engaging in said recess to securely lock said pin in position, said pin providing a connection between said slide arm means and said piston which is readily separable from said slide arm means.

References Cited in the file of this patent

UNITED STATES PATENTS

1,290,849	Sturgeon	Jan. 7, 1919
2,750,849	Harvey	June 19, 1956
2,814,972	Simmons	Dec. 3, 1957
2,987,967	Wild et al.	June 13, 1961

FOREIGN PATENTS

1,235,856	France	May 30, 1960