Feb. 11, 1964 W. E. JOHNSON ETAL 3,120,774

POWER HAMMER

Filed Jan. 25, 1962 4 Sheets-Sheet 1

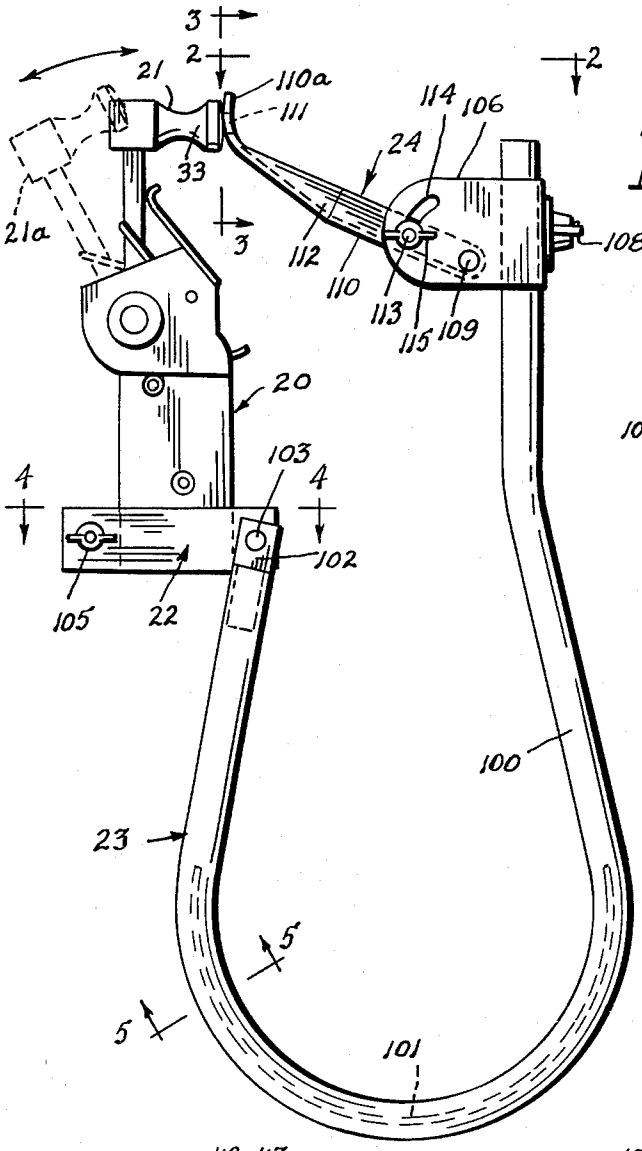

FIG. 1.

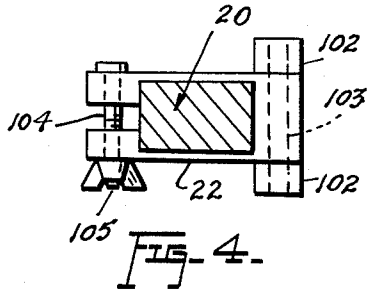

FIG. 4.

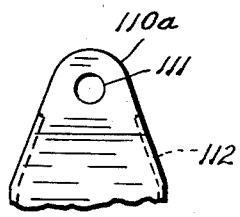

FIG. 3.

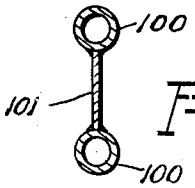

FIG. 5.

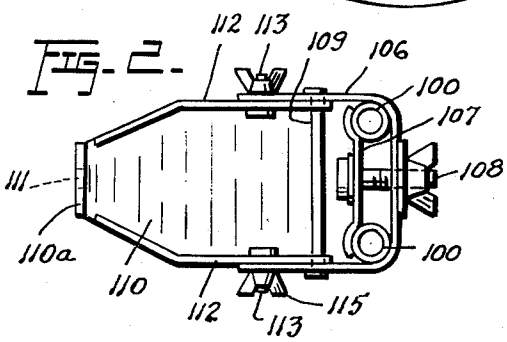

FIG. 2.

INVENTORS
William E. Johnson
Jerry R. Lairson

BY

ATTORNEY

POWER HAMMER

Filed Jan. 25, 1962 4 Sheets-Sheet 2

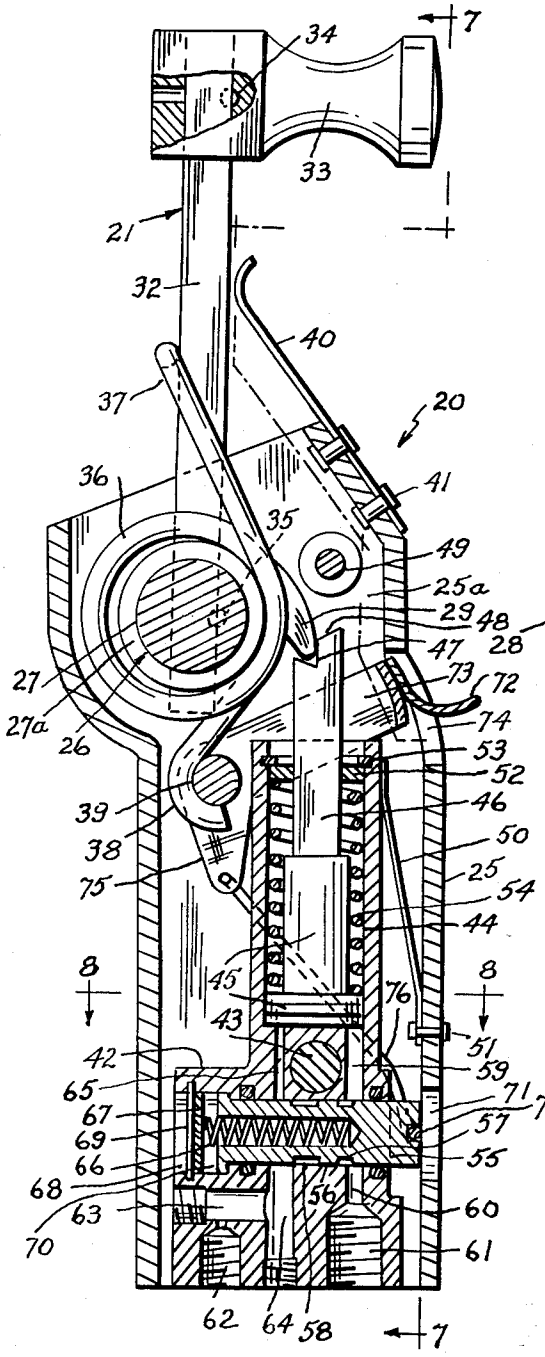

FIG. 6.

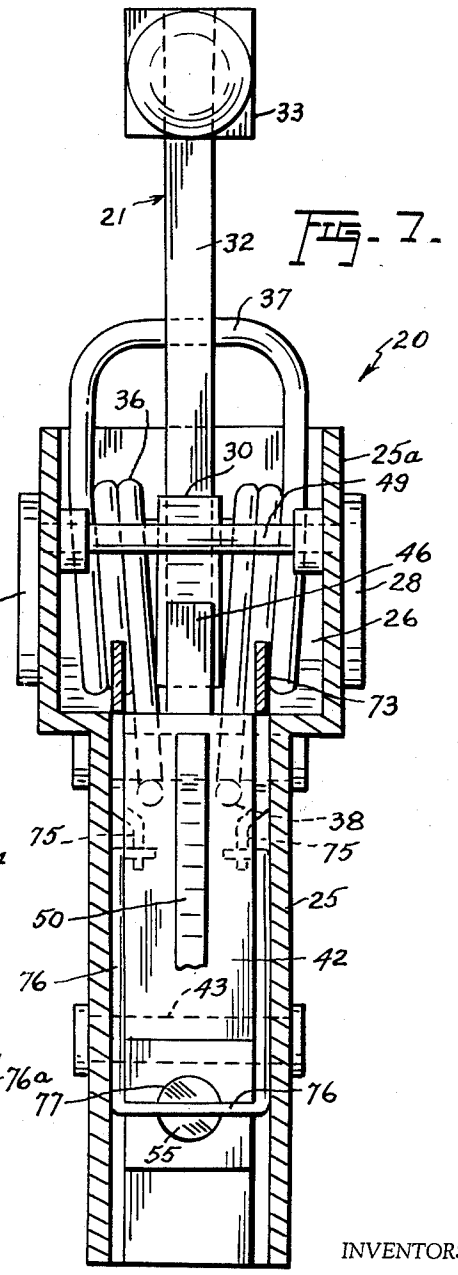

FIG. 7.

INVENTORS
William E. Johnson
Jerry R. Lairson
BY
ATTORNEY

POWER HAMMER

Filed Jan. 25, 1962 4 Sheets-Sheet 3

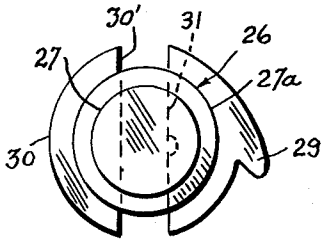

FIG. 10.

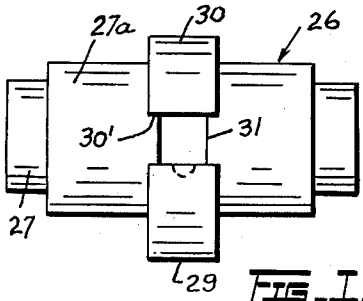

FIG. 11.

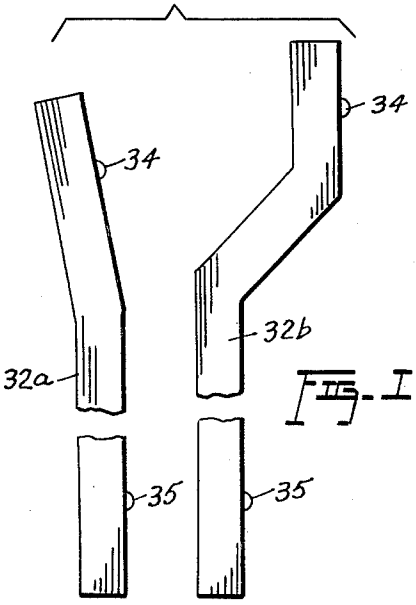

FIG. 12.

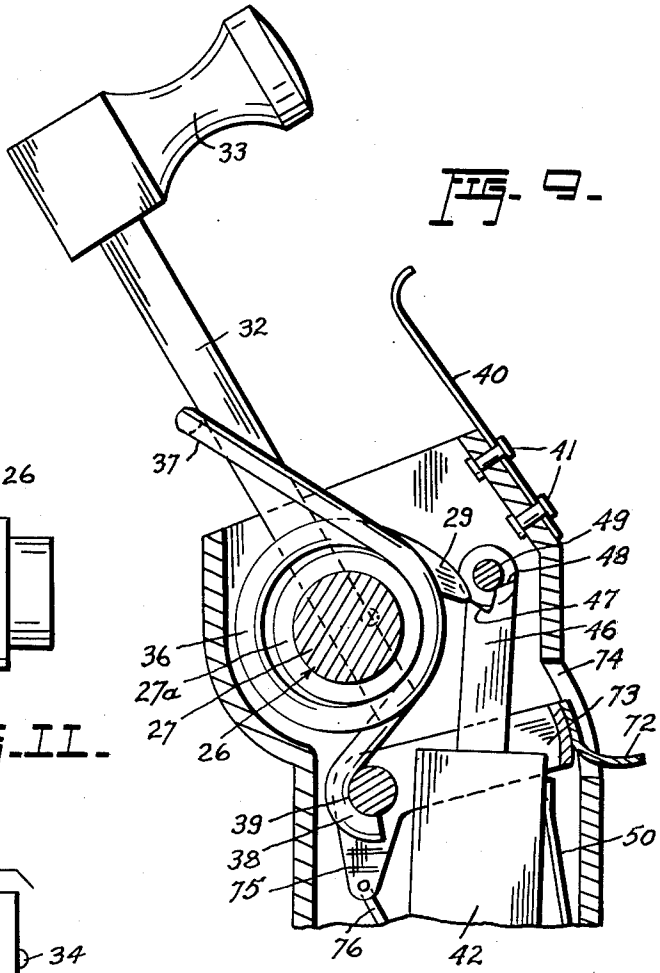

FIG. 9.

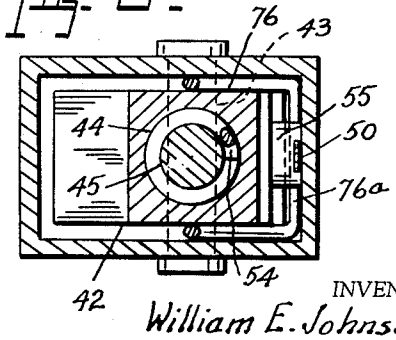

FIG. 8.

INVENTORS
William E. Johnson
Jerry R. Lairson
BY
ATTORNEY

POWER HAMMER

Filed Jan. 25, 1962 4 Sheets-Sheet 4

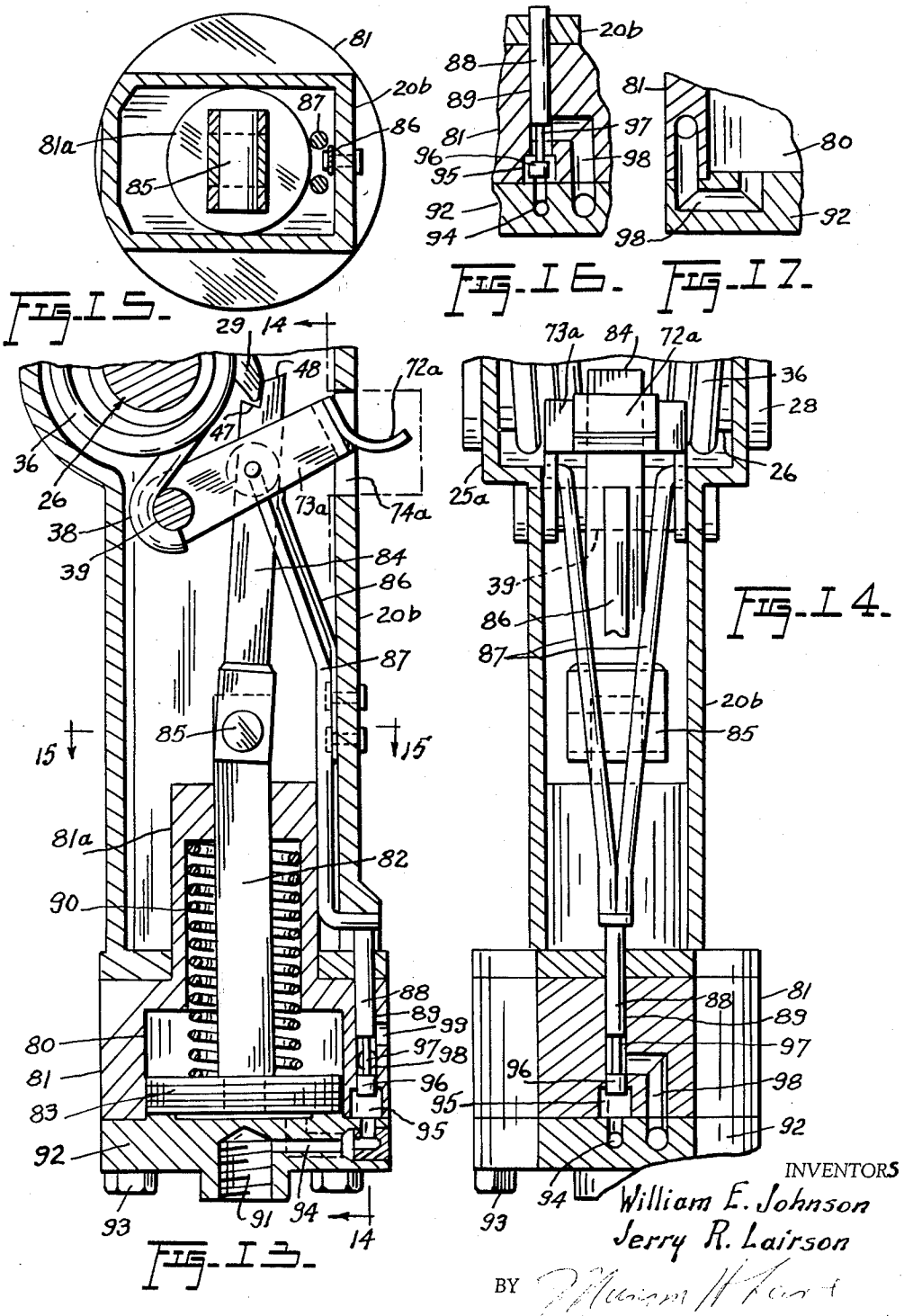

FIG. 15. FIG. 16. FIG. 17. FIG. 14. FIG. 13.

INVENTORS
William E. Johnson
Jerry R. Lairson

BY William H. Ford

ATTORNEY

United States Patent Office

3,120,774

Patented Feb. 11, 1964

1

3,120,774
POWER HAMMER

William E. Johnson, Orlando, Fla., and Jerry R. Lairson, Wake Forest, N.C., assignors to The Hydra-Might Company, St. Petersburg, Fla.

Filed Jan. 25, 1962, Ser. No. 168,668
9 Claims. (Cl. 81—15)

This invention relates to new and useful improvements in power hammers, and the principal object of the invention is to provide a portable, hand supported hammer which may be conveniently and effectively employed for hammering in close quarters or poorly accessible locations wherein sufficient space does not exist to swing a hand hammer of a conventional type.

As such, the invention is particularly well suited for making automobile body repairs, although it is to be understood that the use of the invention is by no means restricted to this particular environment and that the invention is fully capable of general utility wherever the advantages of a power hammer are desired.

The power hammer in accordance with the invention utilizes an oscillatory hammer member which is swingable between a poised and an impacting position, an important feature of the invention residing in the provision of fluid actuated means, such as hydraulic or pneumatic means, for poising the hammer member, and resilient means for swinging the hammer member to its impacting position after it has been poised.

Another important feature of the invention resides in the provision of novel means for operatively disengaging the fluid actuating means from the poised hammer member to permit swinging of the latter by the resilient means to its impacting position, while yet another feature resides in the provision of novel means for controlling the operation of the fluid actuating means.

The power hammer in accordance with the invention may be conveniently held by hand during its operation, but an additional feature of the invention involves the provision of a supporting frame for the hammer, with means carried by the frame for indicating a point of impact of the hammer head on the work, whereby the device may be efficiently utilized in instances where the hammer head is hidden by the work, so that hammering at undesired or improper points is eliminated.

Some of the advantages of the invention reside in its simplicity of construction, efficient and convenient operation, and in its adaptability to economical manufacture.

With the foregoing more important objects and features in view and such other objects and features as may become apparent as this specification proceeds, the invention will be understood from the following description taken in conjunction with the accompanying drawings, wherein like characters of reference are used to designate like parts, and wherein:

FIGURE 1 is a side elevational view of the power hammer, its supporting frame and indicating means in accordance with the invention;

FIGURE 2 is a fragmentary plan view, taken substantially in the plane of the line 2—2 in FIGURE 1;

FIGURE 3 is a fragmentary elevational detail, taken substantially in the plane of the line 3—3 in FIGURE 1;

FIGURE 4 is a fragmentary sectional view, taken substantially in the plane of the line 4—4 in FIGURE 1;

FIGURE 5 is a sectional detail, taken substantially in the plane of the line 5—5 in FIGURE 1;

FIGURE 6 is an enlarged, vertical sectional view of the hammer per se;

FIGURE 7 is a view, partly in elevation and partly in vertical section, taken substantially in the plane of the line 7—7 in FIGURE 6;

2

FIGURE 8 is a cross-sectional view, taken substantially in the plane of the line 8—8 in FIGURE 6;

FIGURE 9 is a fragmentary sectional view, similar to the upper portion of FIGURE 6 but showing the hammer member in its poised position;

FIGURE 10 is an end view of the hammer member supporting shaft;

FIGURE 11 is a top plan view of the shaft shown in FIGURE 10;

FIGURE 12 is an elevational view showing two modifications of the hammer member shank;

FIGURE 13 is a fragmentary vertical sectional view, similar to FIGURE 6 but illustrating a modified embodiment of the hammer;

FIGURE 14 is a fragmentary sectional view, taken substantially in the plane of the line 14—14 in FIGURE 13;

FIGURE 15 is a cross-sectional view, taken substantially in the plane of the line 15—15 in FIGURE 13; and

FIGURES 16 and 17 are fragmentary vertical sectional details of the valve means used in the embodiment of FIGURES 13–15.

Referring now to the accompanying drawings in detail, more particularly to FIGURES 1–5 inclusive, the power hammer in accordance with the invention is designated generally by the numeral **20** and includes an oscillatory hammer member **21** which is swingable between a poised position shown by the dotted lines **21***a* to the impacting position shown by the full lines. The hammer **20** is shown as being attached by a clamp assembly **22** to the relatively short arm of a substantially J-shaped or U-shaped supporting frame **23**, the swinging movement of the hammer member **21** from its poised position to its impacting position being in the direction of the relatively long arm of the frame **23**, which long arm is equipped with adjustable indicating means **24** for indicating a point on the work where the hammer member **21** will impact. The construction and operation of the components **22**, **23**, **24** will be hereinafter detailed, and in the meantime it is to be noted that the power hammer **20** is capable of being used per se by being held in the hand, in which event the use of the components **22**, **23**, **24** is not required.

Referring now to the hammer structure **20** as illustrated in FIGURES 6–12, the same embodies a suitable housing **25** which may be rectangular in cross-section and provided with open upper and lower ends, the upper end portion of the housing preferably being enlarged as at **25***a* to accommodate certain parts of the mechanism therein, namely, a supporting shaft **26** for the hammer member **21**. The shaft **26** extends transversely in the housing portion **25***a* and consists of a shaft member **27** disposed in and projecting at its ends from a tubular sleeve **27***a*. The projecting end portions of the shaft member **27** are rotatably journalled in bearings **28** at the opposite sides of the housing, and the intermediate portion of the sleeve **27***a* is provided with a diametrically enlarged portion **30** equipped with a cam-like detent **29**. The enlarged portion **30** is cut away as at **30'** to register with a transverse bore or socket **31** of a rectangular cross-section which extends through the sleeve **27***a* and through the shaft member **27** for removable reception of a rectangular shank **32** of the hammer member **21**, it being noted that the shank **32** projects upwardly from the housing and is equipped at its outer end with the hammer head or poll **33**. The latter may be of any suitable configuration and is removably held on the shank by a conventional "snap-on" ball retaining means **34**, whereby hammer heads of various types may be interchangeably used on the same shank. The shank itself is removably held in the socket **31** by simi-

lar ball retaining means 35, so that various shanks of different configurations may be used interchangeably with the same hammer, examples of such shanks being shown at 32 and at 32*a*, 32*b* in FIGURE 12. The sides of the housing portion 25*a* prevent axial movement of the sleeve 27*a* and when the shank 32 is inserted in the socket 31, axial movement of the shaft member 27 in the bearings 28 is also prevented.

A coil spring 36 has coaxial, spiral or helical end portions loosely positioned on the sleeve 27*a* at opposite sides of the portion 30, while the intermediate portion of this spring forms a U-shaped bail 37 which engages the shank 32 so as to swingably urge the hammer member 21 from its poised to its impacting position. The extremities 38 of the spring 36 are hook-shaped and anchored on a transverse rod 39 in the housing 25. Resiliently yieldable abutment means are provided to prevent swinging of the hammer member 21 beyond its impact position, these means comprising a leaf spring 40 which has one end portion thereof secured to the housing portion 25*a* by suitable fasteners 41, while its outer end portion is free and engageable by the shank 32 of the hammer member when the latter is at or slightly beyond its impact position.

Fluid actuated means are provided for swinging the hammer member to its poised position, such means in the embodiment of FIGURES 6–9 being of a hydraulic type while those in the embodiment of FIGURES 13–17 are pneumatic. In the hydraulic embodiment, the fluid actuated means comprise a block-shaped body 42 which is rockably mounted on a transverse pin or shaft 43 in the lower portion of the housing 25, the cross-sectional dimension of the body relative to the housing being such as to permit this rocking movement. The body 42 includes an upwardly elongated portion formed therein with a cylinder 44 which is open at its upper end and which accommodates a reciprocable piston 45, equipped with a rectangular piston rod 46. The latter projects upwardly from the cylinder 44 and is provided at its upper end with a notch 47 to operatively receive the detent 29 of the shaft 26, when the parts are in the position shown in FIGURE 6 wherein the hammer member 21 is in its impacting position. When fluid under pressure is admitted into the lower end portion of the cylinder 44 by valve means hereinafter described, the piston 45 and piston rod 46 are driven upwardly, the engagement of the detent 29 in the notch 47 of the piston rod causing the shaft 26 to turn in a counter-clockwise direction as viewed in FIGURE 6, thus swinging the hammer member 21 to its poised position, against the resiliency of the spring 36. The outer end of the piston rod 46 is also provided with a cam surface 48 and as the hammer member 21 approaches its poised position, the surface 48 comes into engagement with a deflecting rod 49 which extends transversely in the upper housing portion 25*a*. This engagement is illustrated in FIGURE 9, in which it will be observed that it causes the piston rod 46 to shift radially away from the shaft 26, until the detent 29 is released from the notch 47. Thereupon, the hammer member 21 is forcibly swung by the spring 36 from its poised to its impacting position, during which action the shaft 26 turns back to its initial position shown in FIGURE 6 while the notched end of the piston rod 46 is still out of engagement with the detent 29. A leaf spring 50 has one end thereof secured in the housing 25 as at 51, while its free upper end bears against the upper end portion of the body 42, thus biasing the piston rod 46 radially inwardly toward the shaft 26, it being understood that when the piston rod is shifted outwardly by the deflector rod 49, the entire block or body 42 is rocked in the housing 25 on the pin 43, so that the piston rod remains axially disposed in the cylinder 44. Conversely, when the hammer member 21 is swung to its impacting position and the shaft detent 29 returns to the initial position shown in FIGURE 6, the pressure of the spring 50 on the upper portion of the body 42 causes the body to rock on the pin 43 to facilitate re-engagement of the detent 29 in the piston rod notch 47 in readiness for the next cycle of operation. The piston rod 46 is retained in coaxial alignment with the cylinder 44 by a washer-like guide 52 through which the piston rod slidably extends, the guide 52 being held in the upper end portion of the cylinder 44 by a suitable snap ring 53. A compression spring 54 is also provided in the cylinder 44 between the guide 52 and the head of the piston 45, the purpose of this spring being to slide the piston downwardly in the cylinder when fluid under pressure is discharged from the latter.

The valve means for admitting fluid into the cylinder and permitting discharge of fluid therefrom comprise a plunger-like valve member 55 which is slidably disposed in a bore 56 formed in the lower portion of the body 42, the member 55 being provided with annular grooves 57, 58. The grooves 57, in the valve position shown in FIGURE 6, registers with fluid outlet or discharge passages 59, 60 which extend in the body 42 from the lower end of the cylinder 44 to a fluid outlet port 61. A flexible hose (not shown) is connected to the outlet port 61 for delivering the discharged fluid back to a hydraulic pump (also not shown) by which the hammer is operated, while fluid under pressure from the pump is transmitted by a flexible hose to a fluid inlet port 62 in the body 42.

The inlet port 62 communicates with passages 63, 64, 65 leading to the cylinder 44, communication between the passages 64, 65 being closed when the outlet passages 59, 60 are communicated by the groove 57 of the valve member 55. However, when the member 55 is slid to the left as viewed in FIGURE 6, the groove 58 communicates with the inlet passages 64, 65 to admit fluid under pressure into the cylinder, while discharge of fluid from the cylinder through the outlet passages 59, 60 is prevented by shifting of the groove 57 out of alignment with the outlet passages.

The valve mechanism is biased to its released or discharging position shown in FIGURE 6 by a compression spring 66 which is provided in the valve member 55 and abuts a keeper element 67 held in a counterbore 68 of the bore 56 by a snap ring 69. An enlarged head 70 provided on the valve member 55 in the counterbore 68 prevents the valve member from sliding beyond its released or discharging position under the action of the spring 66, while sliding of the valve member to the inlet or actuating position of the valve is effected manually against the spring 66. An opening 71 is provided in the housing 25 at the outer end of the valve member 55 to facilitate assembly of the manual actuating means which include a U-shaped bail 76 having a bight portion 76*a* seated in a transverse groove 77 formed in the outer end of the valve member 55. The opening 71 facilitates holding of the bail 76 against the inside of the housing 25 while the valve block 42 is being inserted into the housing, and permits visual inspection to assure proper seating of the bight portion 76*a* in the groove 77.

The manual actuating means for the valve mechanism also includes a finger operated trigger 72 which is secured to the bight portion of a U-shaped yoke 73, swingably mounted in the housing 25 on the rod or pin 39, the trigger 72 projecting outwardly from the housing through a suitable opening 74. The sides of the yoke 73 are provided with bell crank portions 75 which have pivotally connected thereto the ends of the bail 76, the sides of the bail extending through spaces between the sides of the body 42 and the housing 25, as shown. It will be apparent from the foregoing that when the trigger 72 is depressed, the bail 76 will cause the valve member 55 to slide inwardly in the bore 56 so as to move the valve from its discharging to its actuating position.

The pneumatic embodiment of the invention shown in FIGURES 13–17 is for most part identical to the hy-

draulic embodiment already described, with the exception that in the pneumatic embodiment the actuating cylinder **80** is provided in a body or block **81** which is rigidly fixed to the hammer housing **20***b*, rather than being rockably mounted therein. As a result, the piston rod **82** of the piston **83** in the cylinder **80** is not capable of deflection radially of the shaft **26**, but the piston rod is equipped with an extension **84**, pivotally connected thereto by a knuckle **85** which permits radial shifting of the extension relative to the shaft **26**. It is to be noted that the notch **47** for engaging the detent **29** and the cam surface **48** for engaging the deflector rod **39** are in this instance provided on the extension **84** rather than on the rigid piston rod itself, although within the context of the appended claims, the piston rod **82** and extension **84** of the pneumatic embodiment may be regarded as an articulated, unitary entity comparable to the rigid rod **46** of the hydraulic embodiment.

The piston rod extension **84** is urged in engagement with the detent **29** by a leaf spring **86**, similar to the aforementioned spring **50**, and the manual remote control for the valve means in this instance also comprises a depressible trigger **72***a*, disposed in an opening **74***a* in the housing **20***b* and carried by a U-shaped yoke **73***a*, rockably mounted on the shaft or pin **39**. The sides of the yoke **73***a* have pivoted thereto the upper ends of a V-shaped connecting link **87**, the lower end of which is secured to the upper end of a vertically slidable valve member **88**, disposed in a bore **89** in the block or body **81**, as shown. It will be apparent that by depressing the trigger **72**, downward sliding of the valve member **88** in the bore **89** will be effected.

The valve body **81** which provides the cylinder **80** is equipped with a cylindrical extension **81***a* which projects upwardly into the hammer housing **20***b* and accommodates a compression spring **90** for sliding the piston **83** downwardly in the cylinder in the absence of compressed air in the latter. Compressed air is admitted into the cylinder through a flexible hose (not shown) connected to an air inlet port **91** in a cap **92** at the lower end of the body **81**, both the cap **92** and the body **81** being secured to the housing **20***b* by suitable bolts or screws **93**.

The air inlet port **91** communicates with an inlet passage **94** in the cap **92** which in turn communicates with an air chamber **95** provided in the body **81** at the lower end of the bore **89**. The lower end of the valve member **88** is equipped with a piston head **96** which projects downwardly into the chamber **95**, while a portion of the member **88** immediately above the head **96** is grooved or diametrically reduced, as at **97**. The bore **89** is in communication with a passage **98** which extends through the body **81** and cap **92** to the bottom of the air cylinder **80** for admitting compressed air into the latter, while an air discharge opening **99** communicates the bore **89** with the atmosphere.

The arrangement of the various passages relative to the valve member **88** is such that when the valve member is in its raised position as shown in FIGURES 13 and 14, the piston head **96** prevents flow of compressed air from the chamber **95** into the bore **89** and consequently into the cylinder **80** through the passage **98**, but the reduced portion **97** of the valve member permits exhaust of air from the cylinder through the passage **98**, bore **89** and opening **99** to the atmosphere, thus facilitating downward sliding of the piston **83** by the spring **90**. However, when the trigger **72***a* is depressed, the valve member **88** is slid downwardly in the bore **89** by the bail **87** to the position shown in FIGURE 16, wherein the piston head **96** has fully entered the chamber **95** so that compressed air may pass from the chamber **95**, through the bore **89** and through the passage **98** into the cylinder **80** for sliding the piston **83** upwardly in the cylinder. In this position, the valve member **88** block off the exhaust opening **99** to prevent escape of air. When the trigger **72***a* is released, pressure of air in the chamber **95** acting against the piston head **96** automatically causes the valve member **88** to slide upwardly in the bore **89**, thus shutting off the flow of compressed air into the cylinder and opening the air exhaust opening **99**, as will be clearly understood.

Referring again to the illustrations in FIGURES 1–5, the supporting frame **23** consists of a pair of spaced parallel bars or rods or tubes **100** which are substantially J-shaped or U-shaped as already noted, and have their bight portions rigidly secured together in spaced apart relationship by a connecting web **101**, best shown in FIGURE 5. The relatively short arms of the rods or tubes **100** are provided at their extremities with apertured blocks or ears **102** which are connected by a transverse pivot pin **103** to the clamp **22**, the latter being split as at **104** and removably retained on the lower end portion of the hammer housing by a suitable clamp screw **105**.

In the instance of the hydraulic hammer of FIGURES 6–9 which has a housing of a rectangular cross-section, the clamp **22** is rectangular to fit the housing. On the other hand, the pneumatic hammer of FIGURES 13–17 has the circular block and cap **81**, **92** at the lower end of its housing, so a circular clamp is used to fit the block and cap. Such a clamp is formed with a lateral opening (not shown) to facilitate venting of air into the atmosphere through the exhaust opening **99** in the block or body **81**.

The aforementioned impact point indicating means **24** are provided on the relatively long arms of the tubes **100** which form the frame **23**, such means comprising a U-shaped supporting plate **106**, the bight portion of which embraces the tubes **100** as shown in FIGURE 2. A clamping plate **107** is equipped with a clamp bolt **108** which extends through the bight portion of the supporting plate **106** so as to clamp the tubes **100** therebetween, whereby to frictionally lock the entire means **24** in a selected position on the tubes with the facility of raising or lowering the means **24** on the tubes upon loosening of the bolt **108**. The sides of the U-shaped plate **106** have mounted therein a tranverse rod **109** and which is swingably mounted an indicator arm or finger **110** having a free end portion **110***a* provided with a locating aperture **111**. The arm or finger **110** is provided with lateral stiffening flanges **112** equipped with a pair of bolts **113** which extend outwardly through arcuate slots **114** formed in the sides of the plate **106** concentrically with the pivot pin or rod **109**. By virtue thereof, the arm **110** may be swung upwardly or downwardly relative to the plate **106** and wing nuts **115** are provided on the bolts **113** for releasably locking the arm in a selected position.

As will be observed, the arm **110** extends toward the hammer head or poll **33**, with the locating aperture **111** in the arm being in alignment with the center of the hammer head when the same is in its impacting position. Thus, when the apparatus is used in places where the hammer head is hidden by the work and its point of impact on the work is not visible for example, at the inside surface of an automobile fender, the J-shaped frame **23** extends from the power hammer to the outside of the fender and the indicating means **24** at the outside of the fender permits the operator to determine the point of impact of the hammer head on the inside by simply observing the work area which appears at the outside through the locating aperture **111** of the indicating means. The adjustability of the plate **106** on the tubes **100** as facilitated by the bolts **113** permit the indicating means to be set as required by various different types of heads and shanks of the hammer member **21**.

While in the foregoing there have been described and shown the preferred embodiments of the invention, various other modifications may become apparent to those skilled in the art to which the invention relates. Accordingly, it is not desired to limit the invention to this disclosure and various modifications and equivalents may be resorted to, falling within the spirit and scope of the appended claims.

What is claimed as new is:

1. In a fluid operated hammer, the combination of a housing, an oscillatory hammer member mounted in and projecting outwardly from said housing, said hammer member being swingable between poised and impacting positions, fluid actuated means in said housing for swinging the hammer member to its poised position, means for operatively disengaging said fluid actuated means from the hammer member at the poised position of the latter, resilient means for swinging the hammer member from the poised to the impacting position upon disengagement of the fluid actuated means from the hammer member, means for controlling the operation of said fluid actuated means, said fluid actuated means include a cylinder provided in said housing, a piston reciprocable in said cylinder, a piston rod connected to said piston and projecting outwardly from the cylinder, and a detent oscillatory with said hammer member and operatively engageable by the outer end of said piston rod for swinging the hammer member to its poised position when said piston is slid outwardly in said cylinder, the outer end portion of said piston rod being movable in said housing into and out of engagement with said detent, and resilient means in the housing for urging the piston rod outer portion into engagement with the detent, said means for disengaging the fluid actuating means from said hammer member comprising a deflector provided in the housing and engageable by the outer end portion of the piston rod when the hammer member is in the poised position.

2. The device as defined in claim 1 together with resiliently yieldable abutment means provided on said housing for said hammer member at its impacting position.

3. The device as defined in claim 1 together with a substantially U-shaped supporting frame, said housing being mounted on one arm of said frame with said hammer member swingable toward the other arm during its movement from the poised to the impacting position, and means provided on said other arm of the frame for indicating the point of impact of said hammer member.

4. The device as defined in claim 1 wherein said means for controlling the operation of said fluid actuated means include manually operated valve means for delivering fluid under pressure into said cylinder for sliding said piston outwardly therein, and resilient means for sliding said piston inwardly in the cylinder.

5. The device as defined in claim 1 wherein said means for controlling the operation of said fluid actuated means comprise valve means having an actuating position for delivering fluid under pressure into said cylinder for sliding said piston outwardly therein and a released position for permitting fluid to be discharged from the cylinder to facilitate inward sliding of the piston, resilient means in the cylinder for sliding said piston inwardly, manually operated means for moving said valve means to its actuating position, and means for moving the valve means to the released position when said manually operated means are not actuated.

6. The device as defined in claim 5 wherein said valve means include a slidable valve member, said means for moving the valve means to its released position comprising a spring in engagement with said valve member.

7. The device as defined in claim 5 wherein said valve means include a slidable valve member, said valve member having a piston head disposed in a chamber for fluid under pressure whereby to provide said means for moving the valve means to its released position.

8. In a fluid operated hammer, the combination of a vertically elongated housing having an open upper end, a transverse shaft rotatably journalled in the upper end portion of said housing, an oscillatory hammer member carried by said shaft and projecting outwardly through the open end of the housing, said hammer member being swingable between poised and impacting positions, a transverse pin provided in the lower portion of the housing in parallel with said shaft, a body rockably mounted on said shaft and provided with an upwardly extending cylinder, a piston reciprocable in said cylinder, a piston rod connected to said piston and projecting upwardly from the cylinder, the upper end of said piston rod having a cam surface and a notch adjacent said cam surface, a projecting detent provided on said shaft, resilient means reacting between said housing and said body for biasing said body to a position wherein said detent of said shaft engages said notch of said piston rod, valve means provided in said body, manually operable means for actuating said valve means whereby to admit fluid under pressure into said cylinder for sliding said piston upwardly and swinging said hammer member to its poised position by engagement of said piston rod with said detent, a transverse deflecting rod provided in the upper portion of said housing and engageable by said cam surface of the piston rod when the hammer member is in its poised position whereby to disengage the piston rod from the detent, resilient means provided on said shaft and operatively engaging said hammer member for swinging the same to its impacting position upon disengagement of said piston rod from said detent, means for actuating said valve means to release fluid under pressure from said cylinder, and resilient means in the cylinder for returning said piston to its initial position.

9. In a fluid operated hammer, the combination of a vertically elongated housing having an open upper end, a transverse shaft rotatably journalled in the upper end portion of said housing, an oscillatory hammer member carried by said shaft and projecting outwardly through the open end of the housing, said hammer member being swingable between poised and impacting positions, an upright cylinder provided in the lower end portion of the housing, a piston reciprocable in said cylinder, a piston rod secured to said piston and projecting upwardly from the cylinder, a rod extension pivoted to the upper end of said piston rod for swinging movement toward and away from said shaft, the upper end of said rod extension having a cam surface and a notch adjacent said cam surface, a projecting detent provided on said shaft, resilient means in the housing for biasing said rod extension toward said shaft whereby said detent may engage said notch of the rod extension, valve means provided in the lower portion of the housing, manually operable means for actuating said valve means whereby to admit fluid under pressure into said cylinder for sliding said piston upwardly and swinging said hammer member to its poised position by engagement of said rod extension with said detent, a transverse deflecting rod provided in the upper portion of the housing and engageable by said cam surface of the rod extension when the hammer member is in its poised position whereby to disengage said rod extension from said detent, resilient means provided on said shaft and operatively engaging said hammer member for swinging the same to its impacting position upon disengagement of the rod extension from the detent, means for actuating said valve means to release fluid under pressure from said cylinder, and resilient means in the cylinder for returning said piston to its initial position.

References Cited in the file of this patent

UNITED STATES PATENTS

1,341,373	Komatar	May 25, 1920
1,934,979	Hopkins	Nov. 14, 1933
2,387,771	Rosenbrook	Oct. 30, 1945
2,467,020	Fischer	Apr. 12, 1949
2,490,254	Casazza	Dec. 6, 1949
2,835,155	Clark et al.	May 20, 1958
3,037,208	Haberstump	June 5, 1962
3,049,951	Rensink	Aug. 21, 1962