Dec. 24, 1963 E. H. E. MARTIN 3,115,631

INFLATABLE REFLECTORS FOR RADIO WAVES

Filed June 29, 1960 3 Sheets-Sheet 1

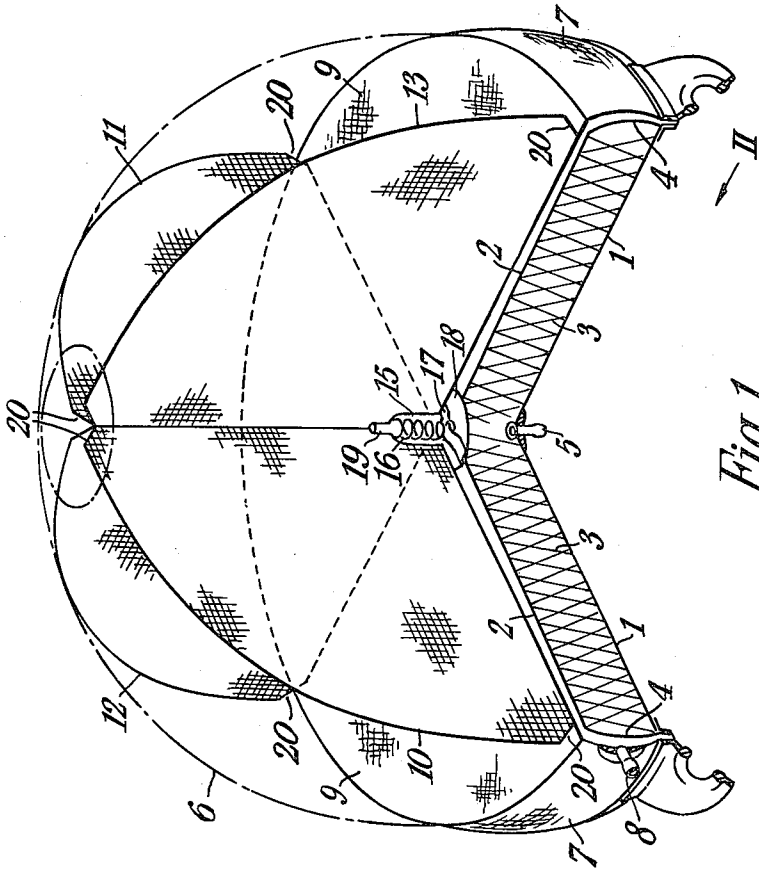

Fig. 1

INVENTOR
Erwin Herbert Erhard Martin
by Benj. T. Rader
his attorney

Dec. 24, 1963 E. H. E. MARTIN 3,115,631

INFLATABLE REFLECTORS FOR RADIO WAVES

Filed June 29, 1960 3 Sheets-Sheet 2

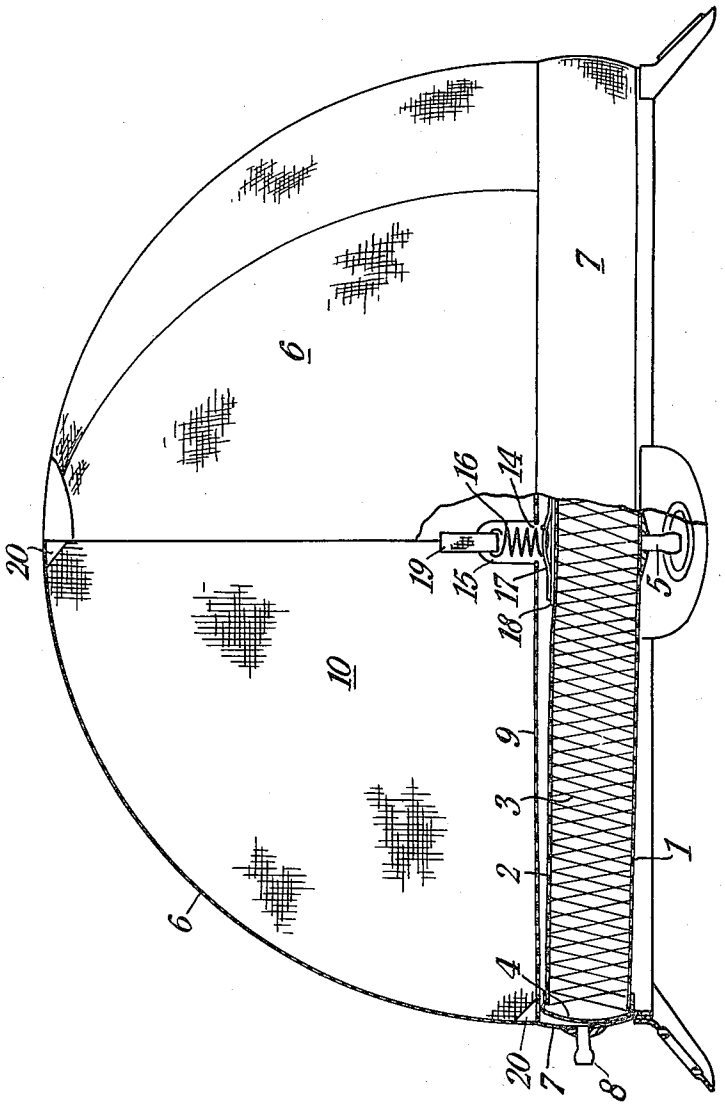

Fig. 2

INVENTOR
Erwin Herbert Eduard Martin
by Benj. T. Rauber
his attorney

INFLATABLE REFLECTORS FOR RADIO WAVES

Filed June 29, 1960 3 Sheets-Sheet 3

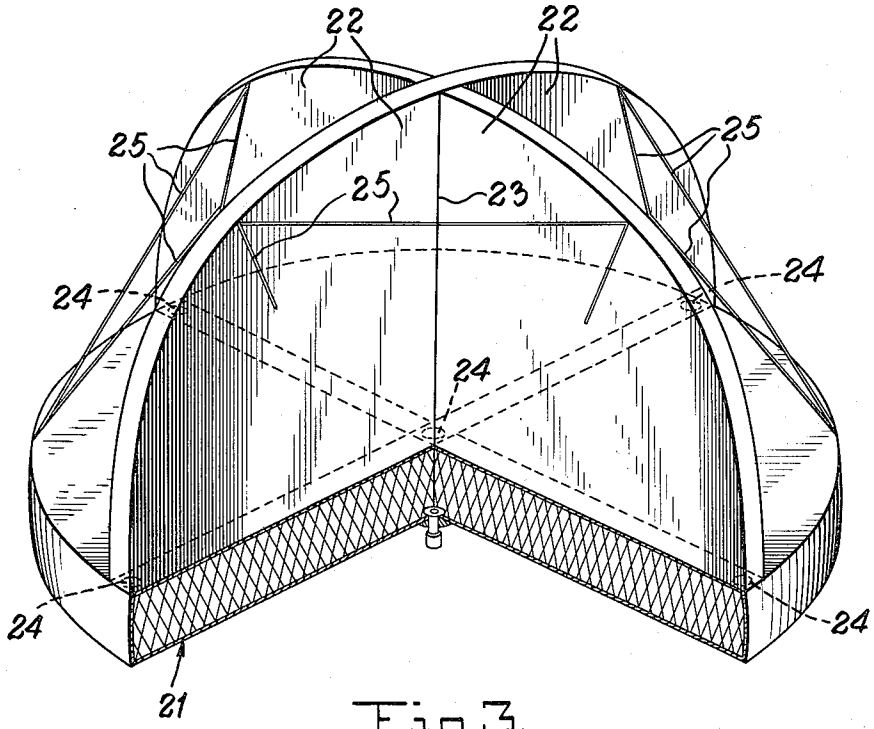

Fig. 3.

INVENTOR.
ERWIN HERBERT ERHARD MARTIN
BY
Benj. T. Rauber
ATTORNEY

United States Patent Office

3,115,631

Patented Dec. 24, 1963

1

3,115,631

INFLATABLE REFLECTORS FOR RADIO WAVES

Erwin Herbert Erhard Martin, Leamington Spa, England, assignor to Dunlop Rubber Company Limited, a British company

Filed June 29, 1960, Ser. No. 39,545
Claims priority, application Great Britain July 2, 1959
12 Claims. (Cl. 343—18)

This invention relates to reflectors for radio waves, for example radar reflectors.

According to the present invention an inflatable reflector for radio waves comprises a base of double pile textile fabric having outer sheets which are rendered substantially impermeable to gas tied together in substantially parallel-spaced relation by pile threads woven from one fabric to the other throughout the area of the fabrics and connected together in sealing relation around their peripheries so as to form a chamber which can be inflated to render it substantially rigid, inflatable erecting means connected to the base, and sheets of flexible radio reflective material secured to the base and to the erecting means whereby on inflation of the base and the erecting means they will be held taut and flat and in mutually perpendicular relation.

The double pile textile fabric may be fabric of the type known as Lister fabric comprising two sheets of woven textile connected together by yarns extending substantially perpendicularly between the sheets, the connecting yarns being formed in the weaving of the sheets. Such a fabric may be woven for example on a "double plush" loom which produces two textile sheets connected together by portions of the weft yarns.

When the fabric is rendered impermeable to gas and the edges of the two sheets are connected together so as to form a closed chamber, inflation of the chamber causes both sheets to be held substantially flat, outward bowing of the sheets being prevented by the connecting yarns.

The double pile fabric for use in the invention has connecting yarns longer than is usually the case so that the two textile sheets lie a sufficient distance apart to give substantial rigidity when the fabric chamber is inflated. A convenient length of connecting yarn is from 1½ to 3 inches.

The sheets of the double pile fabric are preferably rendered impermeable to gas by coating or impregnating with plastic, for example a thermoplastic such as polyvinyl chloride. This may be carried out for example by spreading or by "topping" in a calender a thin film of plastic on each sheet of the fabric. The spreading or "topping" is sufficient to form a continuous film of plastic on the fabric and to force the plastic into the interstices of the fabric so as to close them, but not to penetrate completely through the fabric since this would stick the two sheets closely together.

The inflatable erecting means may be for example an envelope secured to the base and enclosing the reflective sheets or one or more tubular struts secured to the base and to the sheets. Alternatively the erecting means may be formed, like the base, from double pile textile fabric, the sheets of which are rendered gas impermeable and are connected together in sealing relation around their peripheral edges.

The flexible radio reflective material may be textile fabric such as nylon mesh, with a coating of metal such as silver, or may be a metal foil, and may be secured to the double pile fabric by adhesive, heat sealing or other convenient means. The radio reflective material may be laminated to flexible plastic sheet as described in copending patent application of Jones, Hinton and Gray, Serial No. 810,438, filed May 1, 1959, now abandoned,

2

for reinforcing it and for facilitating fabrication of it by heat sealing.

A satisfactory type of reflector for radar purposes is that known as a "corner" reflector, comprising three plane reflective surfaces mutually perpendicular to each other. Such a reflector has the known property of reflecting along paths parallel to their incoming paths any signals striking it from any direction within the solid angle defined by the planes of its reflecting surfaces.

A bottom sheet of radio reflective material of similar but not necessarily equal size and shape to that of the base is secured thereto by its edges, the edges preferably joining a sleeve which extends around the periphery of the base, one end of the sleeve being attached to the base and the other end to the edge of the bottom sheet of reflective material and to the edge of an inflatable envelope.

Further sheets of radio reflective material are attached, as vanes at right-angles to each other and the bottom sheet when stretched taut by inflation, to the envelope and to the bottom sheet. At the line of their intersection the vanes are resiliently connected to the double pile fabric of the base, as by a resilient member which passes through a central aperture in the bottom sheet, the vanes having cut-away portions adjacent the aperture.

The invention will be described by way of example with reference to the accompanying drawings in which:

FIGURE 1 is a fragmentary perspective view of an inflatable reflector for radio waves,

FIGURE 2 is a view of the reflector of FIG. 1 in direction II, and

FIG. 3 is a fragmentary perspective view of a modification of the invention.

A circular base member is formed from a circular piece of double pile fabric having sheets of material **1**, **2** tied together by connecting threads **3** and rendered gas-impermeable in the manner described above. A closure strip **4** of gas-impermeable textile fabric of width somewhat greater than the length of the connecting yarns **3** is secured by its edges to the edges of the double pile fabric sheets **1**, **2** so as to form with them a closed disc-like base. Conveniently the strip may be secured to the sheets by heat sealing. An inflation valve **5** is provided in the centre of one of the sheets so that the base can be inflated to render it substantially rigid.

A hemispherical envelope of gas-impermeable material **6** is secured around its edge to one end of a short cylindrical sleeve **7** of similar material of greater length than the length of the peripheral connecting yarns **3** of the base. The sleeve **7** surrounds and encloses the base, and its edge is secured to the junction between the closure strip **4** and the outermost textile sheet **1** of the base. An inflation valve **8** is provided in the cylindrical sleeve so that the hemispherical envelope **6** can be inflated separately from the base.

Radio reflective sheets **9**, **10**, **11**, **12**, **13** are mounted within the hemispherical envelope and are held taut when it and the base are inflated. A circular bottom sheet **9** of flexible radio reflecting material of diameter equal to the diameter of the envelope **6** is secured by its periphery to the junction between the envelope **6** and the sleeve **7** and four quadrantal sheets **10**, **11**, **12**, **13** are each secured as vanes to the sheet **9** by one radial edge along perpendicular diameters so that their second radial edges meet along the central axis of the base and of the hemispherical envelope and they are secured together by these edges. Their curved edges, of radius not greater than the radius of the envelope are secured to it, cut-away portions **20** at the extremities of the edges, together with the space **15**, allowing for the passage of air during inflation and deflation of the envelope.

An aperture **14** is cut in the centre of the bottom reflective sheet **9** and the adjacent portions of the vanes

10, 11, 12, 13 are cut away to leave a space 15 to house a tension spring 16 connected at one end to a tab 17 secured to a reinforcing disc of fabric 18 at the centre of the base sheet 2 and at its other end to a support 18 secured at the adjacent end of the connected radial edges of the vanes. When the assembly is inflated the spring 16 tensions these connected edges to prevent creasing.

Instead of connecting the envelope along the edges of the reflective sheets of the vanes it may in some cases be convenient to connect to the envelope only a point adjacent the extremities of the junctions between the various sheets, or additionally an intermediate point on the edges of the sheets and this has been found to give satisfactory results.

On inflation the base is inflated to a pressure somewhat greater than that of the envelope. The inflation of the base provides for substantial rigidity of the assembly, and the envelope when inflated provides for radial tensioning of the reflective sheets. This inflation itself will hold the several sheets substantially flat and in the desired relation but the tension spring 16 connected between the reflective sheets and the base counteracts any tendency to creasing, the spring being tensioned by the outward bowing of the base due to the pressure in the envelope.

The envelope may be inflated by any convenient gas, for example air or carbon dioxide.

In one example constructed in accordance with the embodiment described above, the base is 30 inches in diameter and the quadrantal sheets of 15 inches radius. The length of the connecting yarns of the base is 2 inches. The base is inflated to a pressure of 2 lbs. per square inch and the envelope to a pressure of ¼ lb. per square inch. The base is formed from a cotton/nylon fabric coated with polyvinyl chloride and the hemispherical envelope is of polyvinyl chloride. The radio reflective sheets are of silver coated nylon mesh. The several parts of the assembly are secured together by heat sealing.

To facilitate this method of assembly, the mesh may be laminated to polyvinyl chloride sheet, either throughout its area or at its edges only.

In the alternative embodiment shown in FIGURE 3 a base is formed from double pile fabric 21 as before and four further pieces 22 of double pile fabric are secured to it along lines at right-angles and are connected together by one edge 23. The edges of all the pieces are sealed and their sheets are rendered gas-impermeable so that they can be inflated, whereupon they stand perpendicular to the base and to each other. Sheets of reflective material are secured to each surface of the further pieces of double pile fabric and to the surface of the base on which they are mounted, so that when the whole assembly is inflated they will be held taut and flat and in desired relation to provide a cluster of four corner reflectors as in the previous embodiment.

Apertures 24 may be provided in the walls between the various elements of double pile fabric so that the whole assembly can be inflated from a single valve. Wires or struts 25 may be provided for bracing the assembly when inflated.

Having now described my invention, what I claim is:

1. An inflatable reflector for radio waves comprising a base of double pile textile fabric having outer sheets which are rendered substantially impermeable to gas tied together in substantially parallel spaced relation and connected together in sealing relation around their peripheries so as to form a chamber which can be inflated to render it substantially rigid, inflatable erecting means connected to the base, and sheets of flexible radio reflective material secured to the base and to the erecting means whereby on inflation of the base and the erecting means they will be held taut and flat and in mutually perpendicular relation.

2. An inflatable reflector as claimed in claim 1 wherein the radio reflective sheets include a bottom sheet secured over the base by its edges.

3. An inflatable reflector as claimed in claim 2 wherein the erecting means comprises an envelope secured by its edges around the periphery of the base.

4. An inflatable reflector as claimed in claim 3 wherein the radio reflective sheets comprise four vanes attached to the envelope and to the bottom sheet.

5. An inflatable reflector as claimed in claim 4 wherein the vanes are resiliently connected to the double pile fabric of the base at the line of their intersection.

6. An inflatable reflector as claimed in claim 5 wherein the bottom sheet has a central aperture adjacent which the vanes have cut away portions, a resilient member being secured to the base, passing through the aperture and being secured to the adjacent end of the line of intersection of the vanes.

7. An inflatable reflector as claimed in claim 3 wherein the bottom radio reflective sheet and the envelope join a cylindrical sleeve which extends around the periphery of the base and is secured thereto.

8. An inflatable reflector as claimed in claim 7 wherein an inflation valve is provided in the sleeve and a further inflation valve is provided in the outermost sheet of the base.

9. An inflatable reflector as claimed in claim 1 wherein said sheets of the double pile textile fabric are tied together by yarns having a length of from 1½ to 3 inches.

10. An inflatable reflector as claimed in claim 1 wherein the radio reflective sheets are of silver coated nylon mesh.

11. An inflatable reflector as claimed in claim 1 wherein the radio reflective sheets are laminated with flexible synthetic plastic sheet material.

12. The reflector of claim 1 in which the erecting means comprises an assembly of four pile fabric elements joined to said base on lines at 90° to each other and joined to each other on a line extending from the center of said base, the outer sheets of said four pile fabric elements being impermeable to fluids and closed at their edges by a fabric impermeable to fluids, said assembly of pile fabric elements having passages for the passage of inflating fluid from one to the other.

References Cited in the file of this patent

FOREIGN PATENTS

838,250 Great Britain ---------- June 22, 1960