PHOTOELECTRIC SORTING METHOD AND APPARATUS

Filed July 19, 1960 2 Sheets-Sheet 1

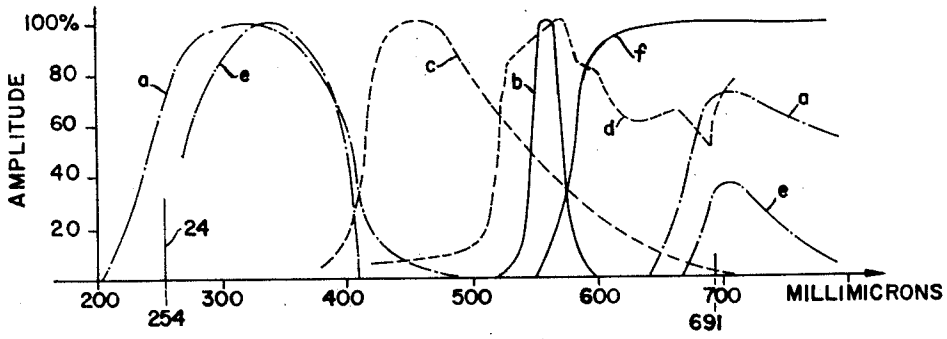

FIG. 2.

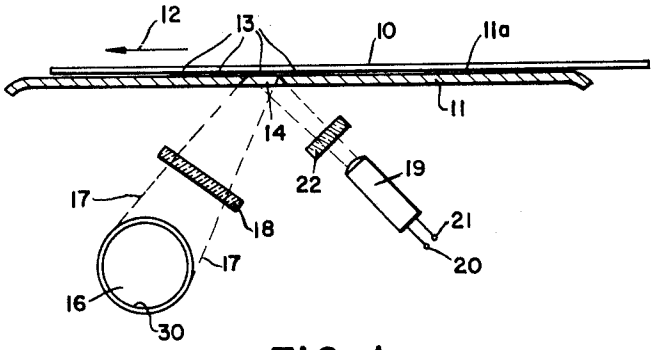

FIG. 1.

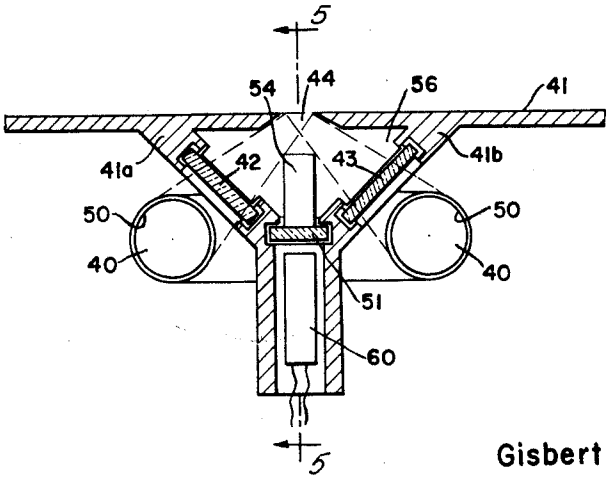

FIG. 3.

INVENTORS
Gisbert Burkhardt &
Kurt Kirsch
BY George H. Spencer
ATTORNEY

PHOTOELECTRIC SORTING METHOD AND APPARATUS

Filed July 19, 1960 2 Sheets-Sheet 2

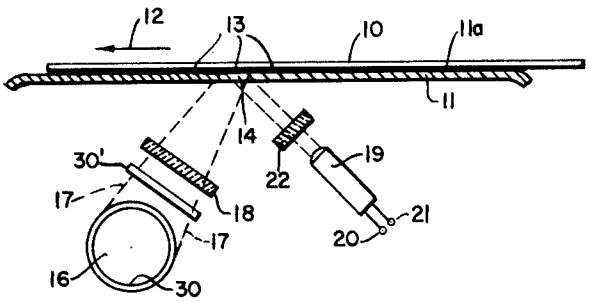

FIG. 4.

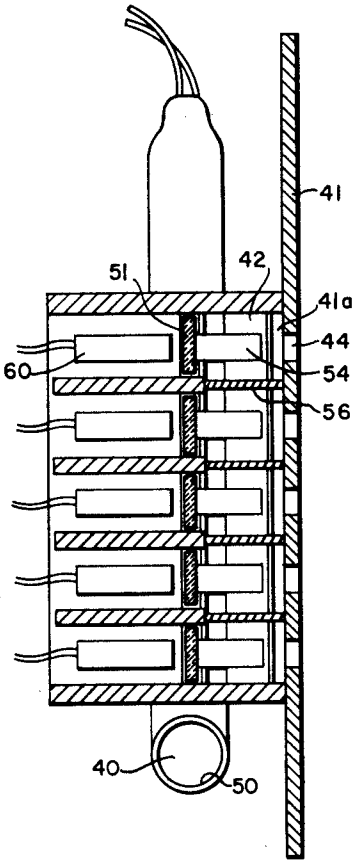

FIG. 5.

INVENTORS
Gisbert Burkhardt &
Kurt Kirsch

BY Spencer & Kaye
ATTORNEYS

United States Patent Office

3,105,908

Patented Oct. 1, 1963

1

3,105,908
PHOTOELECTRIC SORTING METHOD AND APPARATUS

Gisbert Burkhardt and Kurt Kirsch, Konstanz (Bodensee), Germany, assignors to Telefunken G.m.b.H., Berlin, Germany

Filed July 19, 1960, Ser. No. 43,843
Claims priority, application Germany July 25, 1959
15 Claims. (Cl. 250—219)

The present invention relates to a method and apparatus for sorting mail or the like. More particularly, the present invention relates to a method and apparatus for sorting mail carrying fluorescent markings.

In mail sorting apparatus, it is advantageous to have some marks or markings on the mail itself, which marks or markings correspond to the destination to which the mail is going, so that the physical characteristics of the markings can be sensed by means of magnetic or photoelectric sensing apparatus. The markings serve as a guiding criterion so that the process of distribution is actually controlled by the mail itself.

In some conventional apparatus, the marks on the mail, which may be in the form of letters, postal cards or parcels, are visible to the naked eye. The sensing means then must sense these marks in the visible range. However, most items of mail, have on either the front or back thereof a substantial number of markings which are in the optically visible range. For example, the address and other similar material often appears on the outer portion of letters. Thus, a mail-sorting apparatus can be misled if guide-marks of the above mentioned kind are used.

An alternative which might occur to one skilled in the art is the utilization of magnetic markings. However, surprisingly, this method does not work too well, because much of the mail distributed today contains some ferromagnetic material of one kind or another which may cause the mail-sorting apparatus to make errors in indicating the destination of the mail. For example, steel staples are commonly used which may cause the magnetic mail-sorting apparatus to make errors. Furthermore, the magnetic markings are generally opaque and therefore can impair the legibility of, e.g., the address if this is not properly arranged.

In accordance with the present invention, the markings are made from a fluorescent material which is transparent, or at least translucent. These markings do not become visible until they are irradiated with ultraviolet rays. Accordingly, an appropriate ultraviolet source is utilized and a photoelectric apparatus is provided for receiving the rays from the fluorescent material. This serves to avoid the difficulties caused by optically visible markings and magnetic markings. It has been found, however, that some of the paper used in letter envelopes and wrapping paper for parcels contains material which also respond to ultraviolet rays, i.e., materials which become visible when irradiated with ultraviolet light. Accordingly, it is an object of the present invention to provide a new and improved method and apparatus for sorting mail, such as letters, postal cards, parcels and the like, said method and apparatus overcoming the above-mentioned and other disadvantages of the heretofore known methods and apparatus.

It is another object of the present invention to provide a method and apparatus for sorting mail and the like, using fluorescent markings on the mail itself and a photoelectric apparatus for detecting any emissions from the fluorescent material, reliably discriminating between these emissions and interfering emissions from the wrapping paper.

2

It is an additional object of the present invention to provide a new and improved apparatus for sorting mail, said apparatus being of rugged construction, can be built at low cost and will give long periods of trouble-free and error-free service.

With the above objects in view, the present invention resides mainly in a method of an apparatus for automatically sorting mail, the method including the steps of depositing a fluorescent material on the mail to be sorted, the material having such properties that a substantial portion of the energy emitted therefrom upon excitation includes rays having wave lengths greater than 550 millimicrons, and producing along a preselected path exciting rays for inducing fluorescence of the fluorescent material, substantially all of said exciting rays having wave lengths in the region between 300 and 400 millimicrons. The mail to be sorted is then moved into the preselected path of the exciting rays, whereby these rays impinge upon the fluorescent material. Thus, any rays emitted from the fluorescent material upon excitation are detected which have wave lengths larger than 550 millimicrons, thereby indicating the exact nature of the markings on the mail.

In apparatus operating in accordance with the principles of the present invention, the mail is marked with a fluorescent material emitting rays upon excitation comprising wave lengths longer than 550 millimicrons. Means are provided for producing exciting rays for the fluorescent material along a preselected path, substantially all of the exciting rays having wave lengths in the region between 300 and 400 millimicrons. Means are provided for moving the mail to be sorted into the preselected path so that the exciting rays impinge on the fluorescent material and additional means are provided for detecting any rays which are emitted from the fluorescent material due to the impingement of the exciting rays thereon, said detecting means being responsive only to rays longer than 550 millimicrons.

According to another feature of the present invention, a low-pressure mercury vapor lamp is used as the source of the exciting rays and transforming means are provided for transforming the 254 millimicron emission of this lamp into exciting rays having wave lengths longer than 254 millimicrons.

Additional objects and advantages of the present invention will become apparent upon consideration of the following description when taken in conjunction with the accompanying drawings, in which:

FIGURE 1 is a schematic arrangement of an apparatus incorporating the principles of the present invention.

FIGURE 2 is a graph showing normalized curves of emissivity and filter-transmissivity which are referred to in explaining the present invention.

FIGURE 3 is a schematic illustration, partially in section, of another embodiment of the present invention.

FIGURE 4 is a schematic view similar to FIGURE 1 illustrating another embodiment.

FIGURE 5 is a partial sectional view taken substantially along the plane generally defined by reference line 5—5 of FIGURE 3.

Referring in detail to the drawings, and more particularly to FIGURE 1 thereof, it will be seen that a letter or other item of mail designated by the numeral **10** is moved along the flat surface **11***a* of a member **11** in the direction of the arrow **12**. The mail **10** carries fluorescent marks **13** which are approximately equal to the size of an opening **14** in the member **11**. The term "mail" or "item of mail," as used throughout the instant specification and claims, is deemed to include not only any letter, post- or postal card, printed matter, parcel, or the like, customarily handled by postal authorities, but any item or article which

is conveyed and which must be routed to a certain destination.

Arranged on the opposite side of the member **11** is a source of exciting rays **16** which emits rays along a path outlined by the dashed lines **17**. This path intersects the opening **14** in the member **11**. The exciting rays pass through a filter **18** arranged between the member **11** and the source **16**. Spaced from the member **11** is a photoelectric detecting member **19** having terminals **20**, **21**, adapted to be connected to an amplifier and indicator or the like (not shown). A second filter **22** may be arranged between the photoelectric detecting apparatus **19** and the member **11**.

In operation, the mail to be sorted is moved along the flat surface **11***a* of the member **11** in the direction of the arrow **12**. The exciting rays produced by the source **16** are transmitted through the filter **18** and pass through the opening **14** so as to impinge on any fluorescent markings **13** carried by the mail **10**. Should the exciting rays impinge on a fluorescent marking, this fluorescent material will emit rays which pass through the filter **22**, said rays being detected by the detecting apparatus **19**. This detecting apparatus **19** can then direct the routing of the mail as it passes beyond the member **11** by means of conventional amplifiers and control devices.

As mentioned above, certain papers used as envelopes or as wrapping paper for parcels have the property of fluorescing when irradiated with rays in the ultraviolet region. Accordingly, if such paper is used, it is sometimes difficult for the detecting apparatus to differentiate between the rays emitted from the paper and the rays emitted from the special fluorescent markings. The use of a filter for differentiating between the different types of rays produced does not work too well, since these filters have transmission characteristics incompatible with conventional type sources of exciting rays. For example, conventional source is a high-pressure mercury vapor lamp. One disadvantage of such a lamp is that the high-pressure mercury vapor lamp is a source of intense heat which may damage the mail being sorted as well as the sorting apparatus itself. Furthermore, the high-pressure mercury vapor lamp is particularly sensitive to voltage fluctuations, and a drop in the supply voltage, even for a short time, may cause the lamp to be extinguished. As the ordinary high-pressure mercury vapor lamp, once extinguished, will not re-light for a substantial period, a considerable amount of mail will be misdirected, since without an operative source of exciting rays the detecting apparatus is unable to respond to the fluorescent markings showing the destinations of the individual pieces of mail.

The above disadvantages are overcome by providing a low-pressure mercury vapor lamp. According to the prior art such lamp would be used with an ultraviolet filter which has a very good transmission characteristic at the wave length of 254 millimicrons, which is the wave length of the main spectral line of this lamp. The known filters of this kind however, for instance, the filter known as Schott UG 5, have also a good transmission characteristic for wave lengths longer than 650 millimicrons which will permit the passage of red rays, as explained below, having a wave length of 691 millimicrons, said rays being picked up directly by the receiving or detecting apparatus without being produced by the fluorescence of the direct markings. This will cause a misdirection of the mail.

To overcome this disadvantage, in accordance with the present invention, the arrangement shown in FIGURE 1 has the following characteristics:

(*a*) The fluorescent material used for marking the mail has the property that, upon excitation, an essential part of its emissive energy is emitted at wave lengths longer than 550 millimicrons.

(*b*) The source of exciting rays is a low-pressure mercury vapor lamp. Means are provided for transforming the rays produced by this source having a wave length of 254 millimicrons to ultraviolet rays having longer wave lengths. The filter **18**, arranged between the source **16** and the member **11**, has a good transmission characteristic for rays having wave lengths in the region between 300 and 400 millimicrons, while in the visible range, the filter has a transitivity as low as possible for rays having wave lengths longer than 550 millimicrons.

(*c*) The detecting apparatus for receiving the rays emitted from the fluorescent material **13** upon excitation thereof has a relatively broad frequency spectrum, the short-wave limit of its over-all sensitivity being in the range of 550 millimicrons.

Referring now to FIGURE 2, the transmission characteristic indicated by the dot-dash line *a* refers to the filter Schott UG 5 as mentioned above. It can be seen that this filter has an excellent transmission characteristic for the wave length of 254 millimicrons, this wave length corresponding to the main emission of a low-pressure mercury vapor lamp and being shown by the line **24** in FIGURE 2. It should be noted, however, that these filters also have a good transmission characteristic for wave lengths in the red and infrared region, as shown by the second portion of the dot-dash line *a* in FIGURE 2. It can be seen that the red spectral line of the mercury vapor lamp having a wave length of 691 millimicrons will pass through this filter, if used as filter **18**, quite readily.

In order to prevent the red spectral line passing through this filter from being picked up by reflection from the mail **10**, whether or not it carries fluorescent markings, according to prior art the detecting apparatus **19** could be provided with a filter **22**, having a transmission characteristic which is shown as a solid line *b* in FIGURE 2. It will be seen that, in order to attenuate any rays produced by the fluorescent properties of the paper itself, this filter is a very narrow band-pass filter.

The dashed curve *c* in FIGURE 2 indicates the frequency spectrum and the relative amplitude of the emissive rays which may be emitted from the paper used for and/or as the item of mail itself and having fluorescent properties. The curve *c* does not represent any particular type of paper, but rather represents an envelope of the fluorescence properties of different kinds of papers which may be utilized and which the sorting apparatus should be able to distinguish from fluorescent markings. It can be seen from FIGURE 2 that by using the narrow band-pass filter of curve *b* the unwanted emission of the paper itself will be partially suppressed compared with the emission of fluorescent markings. The useful output however is relatively low, resulting in poor signal-to-noise ratio. As mentioned above, the present invention uses a combination of (*a*) the characteristics of the fluorescent material actually marked on the paper for sorting purposes, (*b*) the source of the exciting rays, and (*c*) the detecting apparatus itself. According to the present invention, the fluorescent material has the property that a substantial portion of the energy emitted therefrom upon excitation includes rays having wave lengths greater than 550 millimicrons. It is not absolutely essential that the rays emitted from the fluorescent material have the largest amplitude in this range, merely that a substantial amount of energy is emitted in this range. A suitable fluorescent material is known as yellow-orange Lumogen UV having an emission characteristic such as shown in FIGURE 2 by the curve *d*.

In accordance with features (*b*) of the present invention, a fluorescent layer **30**, shown in FIGURE 1, is deposited about the low-pressure mercury vapor lamp, said layer transforming the 254-millimicron-emission of the lamp **16** into an ultraviolet emission of greater wave lengths than those normally produced by a lamp of this type. As shown in FIGURE 4 wherein elements similar to those of FIGURE 1 are indicated with identical reference numerals, a fluorescent layer **30′** may be arranged between the lamp **16** and the filter **18**. In another em-

bodiment, the fluorescent layer **30** might be arranged on the surface of the filter **18**, at the side which faces the low-pressure mercury vapor lamp **16**.

Thus, a shift of the spectral energy distribution of the emitted ultraviolet rays is accomplished which makes possible the use of a filter **18**, according to the invention, the transmission properties of which are shown by curve *e* in FIGURE 2. One filter of this type is known as Schott UG 11. It will be seen that at 254 millimicrons the transmission factor of this filter is poor, but it is also low at wave lengths longer than 550 millimicrons. Maximal transmission takes place in the range between 300 and 400 millimicrons. Similarly, the transmission characteristic at the red mercury line of 691 millimicrons is substantially lower than that of the formerly mentioned filter UG 5 corresponding to curve *a*. With this arrangement, it is then possible to use a detecting apparatus which according to the invention has a very broad frequency-responsive spectrum, the short-wave limit of which should be about 550 millimicrons. This can be accomplished by utilizing as the filter **22** a filter which has a transmission characteristic shown by the solid curve *f* in FIGURE 2. Such filters are known as the Schott OG 2 or OG 3.

The use of a detecting apparatus having a broad frequency spectrum with the lower limit at 550 millimicrons has several advantages. For example, in combination with the energy distribution of the proposed fluorescent material as shown by the curve *d* of FIGURE 2 it results in a very good signal-to-noise ratio in the receiver. This signal-to-noise ratio is essentially better than the one which would be produced using a filter having the characteristics shown by the curve *b* of FIGURE 2. This becomes evident from FIGURE 2 by comparing the areas belonging to the signal energy according to curve *d* and to the "noise" energy according to curve *c*, both within each of the broad spectral region of filter curve *f* and of the small spectral region of filter curve *b* respectively. Furthermore, the large breadth of the frequency spectrum of the detecting and receiving apparatus allows the absolute amplitude of the signal energy to be such, that it is well above the background noise of the receiver itself.

FIGURE 3 is another embodiment of the present invention, showing the actual structural characteristics of the various components. In this embodiment, the low-pressure mercury vapor lamp has a U-shaped ray source **40**, the legs of the U-shaped source being shown in this figure. The member **41**, along which the letters pass as described by explaining FIGURE 1, has branches **41***a* and **41***b* provided with openings for receiving and positioning the filters **42** and **43**. A further opening **44** permits the passage of the rays through the member **41**. The detecting apparatus **60**, which may be constituted by a photo-electric cell, is arranged on the housing of member **41** and has a filter **51** positioned between the apparatus **60** and the opening **44**.

The filter **51** has the characteristics shown in wave form *f* in FIGURE 2, and the filters **42** and **43** have the characteristics shown by the curve *e* in FIGURE 2.

When the sensing arrangement is in use, the opening **44** in the wall of the member **41** is arranged to correspond to the size of the fluorescent marks on the mail to be sorted which, for example, may be coded guiding marks. A further improvement can be added to this arrangement by positioning in front of the detecting member **60** a translucent member **54** serving as light conductor. If, however, the fluorescent material is contained in the stamps affixed to the mail, opening **44** must be enlarged accordingly.

If several series of fluorescent marks placed side by side are used on the mail, a plurality of detecting apparatus **60** arranged parallel to one another may be used as shown in FIGURE 5. These apparatus are stacked in a direction perpendicular to the plane of the drawing of FIGURE 3. Light conductors **54** are used, and one conductor is provided for each detector **60**. The individual detectors **60** and light conductors **54** are separated from one another by means of partitions **56** which are arranged parallel to each other. In order to increase the sensitivity of the detecting apparatus, these partitions may be made of reflecting material.

In operation, the apparatus is similar to that shown in FIGURE 1, the U-shaped low-pressure mercury vapor lamp having coated on its legs fluorescent layers **50** which serve to transform the rays emitted from the mercury vapor lamp from about 254 millimicrons to ranges of higher wave lengths. The combination of these fluorescent layers **50** and the filters **42** and **43** produce rays impinging on the fluorescent material on the mail through the opening **44** having their maximum of energy in the region between 300 and 400 millimicrons. The rays emitted by the fluorescent marks have a substantial part of energy at wave lengths greater than 550 millimicrons and, accordingly, are quite readily detected by the detecting apparatus **60**, since the combination of the detecting apparatus **60** and the filter **51** is sensitive just within this spectral region as explained above.

It will be appreciated that the combination of the above features, namely, the low-pressure mercury vapor lamp and the particular filter and detecting arrangements, enables fluorescent markings to be used which may be either transparent or translucent. Furthermore, the combination enables the apparatus to differentiate between the actual fluorescent markings used for directing the mail to be sorted out and the fluorescent properties of the paper itself.

In a more elaborate version of the above-described apparatus, two separate detectors could be used, one of which could be trained onto a portion of the mail which normally does not carry any fluorescent marking and the other could be trained onto a portion of the mail which does carry such markings. The response of the two detectors may then be compared with one another so that the difference between the response due to the fluorescent markings and the response due to the inherent fluorescent property of the paper could be even more clearly differentiated.

It will be appreciated that the present invention can also be used to sense the position of a postage stamp, provided the latter carries a suitable fluorescent material. Thus, a letter or postal card which, usually, carries a stamp at the upper right-hand corner, can automatically be placed in the proper upright position and, thereafter, be processed through a mail routing apparatus.

It will be understood that the above description of the present invention is susceptible to various modifications, changes and adaptations, and the same are intended to be comprehended within the meaning and range of equivalents of the appended claims.

We claim:

1. In a method for automatically sorting mail, the steps of: depositing a fluorescent material on the mail to be sorted, said material having such properties that a substantial portion of the energy emitted therefrom upon excitation includes rays having wave lengths larger than 550 millimicrons; producing, along a preselected path, exciting rays for inducing fluoresence of said fluorescent material, substantially all of said exciting rays having wave lengths in the region between 300 and 400 millimicrons; moving the mail to be sorted into said preselected path so that said exciting rays impinge on said fluorescent material; and detecting any rays emitted from said fluorescent material upon excitation which have wave lengths larger than 550 millimicrons.

2. In a method for automatically sorting mail, the steps of: depositing a fluorescent material on the mail to be sorted, said material having such properties that a substantial portion of the energy emitted therefrom upon excitation includes rays having wave lengths larger than

550 millimicrons; producing rays having wave lengths of substantially 254 millimicrons; transforming said rays into exciting rays for inducing fluorescence of said fluorescent material, said exciting rays having wave lengths in the region between 300 and 400 millimicrons and being directed towards a preselected path; moving the mail to be sorted into said preselected path so that said exciting rays impinge on said fluorescent material; and detecting any rays emitted from said fluorescent material upon excitation which have wave lengths larger than 550 millimicrons.

3. Method as defined in claim 1 wherein said fluorescent material is placed on postage stamps gummed to the mail to be sorted.

4. In an apparatus for automatically sorting mail; wherein the mail is marked with a fluorescent material having such properties that a substantial portion of the energy emitted therefrom upon excitation includes rays having wave lengths larger than 550 millimicrons, the combination which comprises: means for producing exciting rays for the fluorescent material along a preselected path, substantially all of said exciting rays having wave lengths in the region between 300 and 400 millimicrons; means for moving the mail to be sorted into said preselected path so that said exciting rays impinge on the fluorescent material; and means for detecting any rays emitted from said fluorescent material due to the impingement of said exciting rays thereon, said detecting means being responsive only to rays longer than 550 millimicrons.

5. In an apparatus for automatically sorting mail, wherein the mail is marked with a fluorescent material emitting rays, upon excitation, having wave lengths longer than 550 millimicrons, the combination which comprises: means for moving the mail to be sorted along a preselected path; means spaced from said path for producing rays having wave lengths of substantially 254 millimicrons; transforming means arranged between said ray producing means and said preselected path for transforming said rays into exciting rays and directing said exciting rays towards said path so as to impinge on the fluorescent material marked on the mail, substantially all of said exciting rays having wave lengths larger than 254 millimicrons; filter means arranged between said transforming means and said preselected path, said filter means having a high transmission characteristic for rays having wave lengths in the region between 300 and 400 millimicrons and having a low transmission characteristic for all other rays; and detecting means for detecting any rays emitted from said fluorescent material due to the impingement of said exciting rays thereon, said detecting means having a broad receiving spectrum the short-wave limit of which is approximately 550 millimicrons.

6. In an apparatus for automatically sorting mail, wherein the mail is marked with a fluorescent material emitting rays, upon excitation, having wave lengths longer than 550 millimicrons, the combination which comprises: means for moving the mail to be sorted along a preselected path; a low-pressure mercury vapor source for producing rays having wave lengths of substantially 254 millimicrons; transforming means arranged between said source and said preselected path for transforming said rays into exciting rays and directing said exciting rays towards said path so as to impinge on the fluorescent material marked on the mail, substantially all of said exciting rays having wave length larger than 254 millimicrons; filter means arranged between said transforming means and said preselected path, said filter means having a high transmission characteristic for rays having wave lengths in the region between 300 and 400 millimicrons and having a low transmission characteristic for all other rays; and detecting means for detecting any rays emitted from said fluorescent material due to the impingement of said exciting rays thereon, said detecting means having a broad receiving spectrum the shortwave limit of which is approximately 550 millimicrons.

7. Apparatus as defined in claim 6 wherein said transforming means are a fluorescent layer arranged on said low-pressure mercury vapor source.

8. Apparatus as defined in claim 6 wherein said transforming means are a fluorescent layer arranged on a carrier which is situated between said filter and said low-pressure mercury vapor source and is transparent to ultraviolet rays.

9. Apparatus as defined in claim 6 wherein said transforming means are a fluorescent layer arranged on said filter between said filter and said low-pressure vapor source.

10. Apparatus as defined in claim 6 wherein said detecting means are provided with a filter having a pass range for rays having wave lengths longer than 550 millimicrons.

11. Apparatus as defined in claim 6 wherein said low-pressure mercury vapor source is U-shaped and said detecting apparatus are arranged between the legs of the U.

12. Apparatus as defined in claim 11 wherein a plurality of detecting apparatus means are arranged between the legs of the U for detecting a series of fluorescent marks on the mail to be sorted.

13. Apparatus as defined in claim 12 wherein said plurality of detecting apparatus are separated from one another by means of a plurality of parallel partitions.

14. Apparatus as defined in claim 13 wherein said partitions are provided with reflecting surface portions.

15. Apparatus as defined in claim 6 wherein at least a part of the space between said preselected path and said detecting means constitutes a ray condensing member.

References Cited in the file of this patent

UNITED STATES PATENTS

2,200,853	Porter et al.	May 14, 1940
2,350,001	Van den Akker	May 30, 1944
2,551,650	Urbach	May 8, 1951
2,565,151	Taylor	Aug. 21, 1951
2,609,928	Doust	Sept. 9, 1952
2,950,799	Timms	Aug. 30, 1960