Sept. 24, 1963 J. L. RIKE ETAL 3,104,703

BOREHOLE LINING OR CASING

Filed Aug. 31, 1960

FIG. 1.

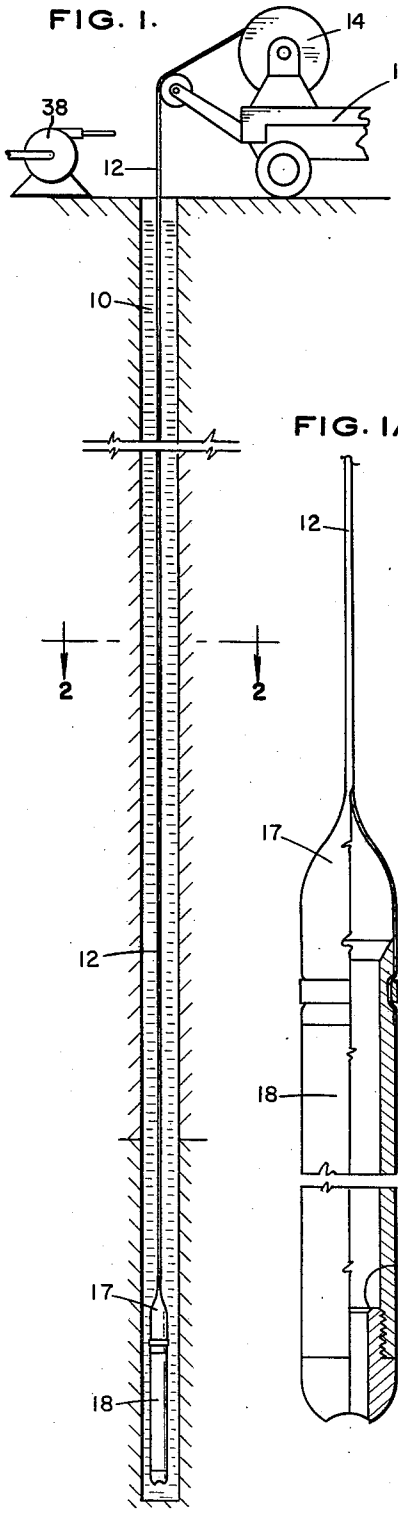

FIG. 1A.

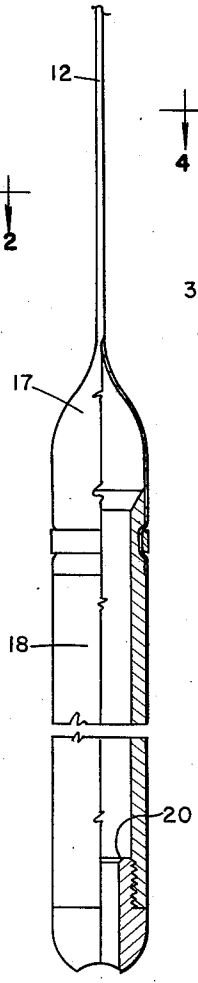

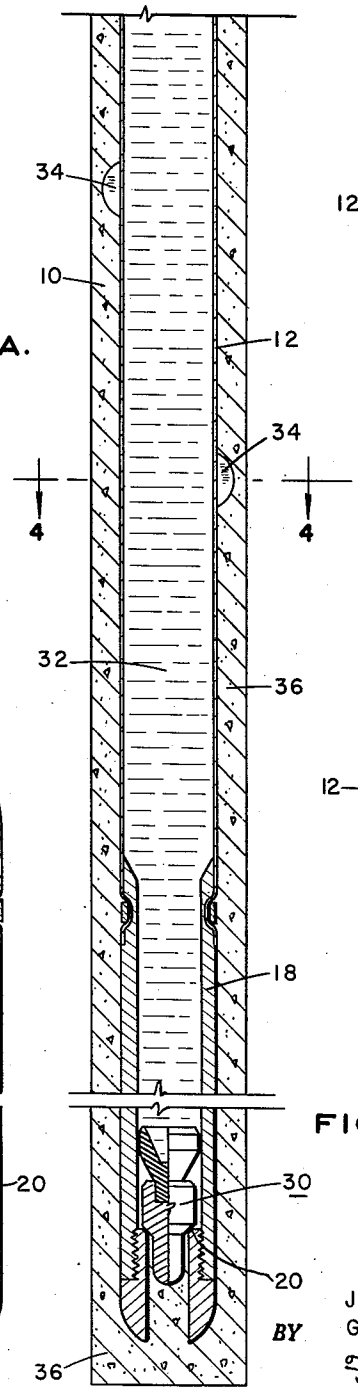

FIG. 3.

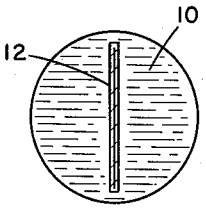

FIG. 2.

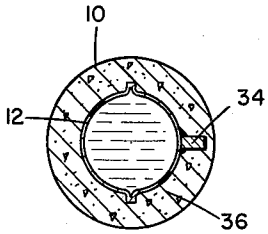

FIG. 4.

INVENTORS.
JAMES L. RIKE,
GARLAND C. TERREL,
BY Frank S. Troidl
ATTORNEY.

United States Patent Office

3,104,703

Patented Sept. 24, 1963

1

3,104,703
BOREHOLE LINING OR CASING

James L. Rike and Garland C. Terrel, Houston, Tex., assignors, by mesne assignments, to Jersey Production Research Company, Tulsa, Okla., a corporation of Delaware

Filed Aug. 31, 1960, Ser. No. 53,080
2 Claims. (Cl. 166—21)

This invention relates to fluid conduits for forming a flow path through a supporting material. More particularly, this invention is a novel oil and gas well lining or casting and a method for forming this lining or casing.

In the finding and production of oil and gas, the costs involved are continuously increasing. Based on present-day costs, casing and tubing alone represent one-quarter of the cost of drilling and completing an oil well. Prospects for reducing this tremendous expenditure depend on finding a suitable substitute for steel tubular members, particularly casing or lining since it represents the major item.

The invention to be described herein provides the art with a low cost borehole lining or casing.

Briefly described, this invention comprises a tubular member of metal with the tubular member having a smaller diameter than the borehole. The tubular member has been inserted into the borehole while in its initial state of being flat or other deflated shape. After the flat ribbon or other deflated shape of inflatable metal material has been inflated, a cementitious material is flowed through the inflated metal tubular member and into the annulus formed by the metal tubular member in the borehole. The cementitious material is then allowed to set in the annulus. The cementitious material which has been allowed to set in the annulus formed by the metal tubular member in the borehole in combination with the metal tubular member provides an efficient borehole lining or casing.

The inflatable metal strips may be produced in any metal that can be cold worked. Each inflatable metal strip is made very thin and is provided with a longitudinal passage. If the strip is thin enough and a high pressure is applied to the longitudinal passage, the shape of the metal is changed into tubular form. These metals include copper, aluminum alloys, stainless and carbon steel, nickel, zirconium, titanium, and tantalum. The use of this light-weight, low-strength, low-cost stripped metal material surrounded with cement, plastic, epoxy, or other supporting material that can be placed in a fluid state and will harden after placement, substantially reduces well costs.

The invention as well as its many advantages will be further understood by reference to the following detailed description and drawings in which:

FIG. 1 is a schematic view in elevation useful in explaining the method of forming the lining or casing;

FIG. 1A is an enlarged view partly in section of the lower portion of FIG. 1;

FIG. 2 is taken along line 2—2 of FIG. 1;

FIG. 3 is a schematic view in elevation useful in explaining the method of placing the cementitious material in the annulus formed after the metal strips have been inflated into a tubular shape; and

FIG. 4 is a view taken along lines 4—4 of FIG. 3.

Referring to FIG. 1, a borehole **10** is shown formed from the earth's surface. A light-weight, low-cost metal in ribbon form **12** is shown lowered into the borehole **10** with its lower extremity adjacent the bottom of the borehole. It is to be understood that the inflatable member **12** may be in shapes other than ribbon form.

2

The length of the strip **12** is chosen to extend to the bottom of the borehole and may be unwound from a reel **14** which may be mounted on a truck **16**. The lower end **17** of ribbon **12** is inflated and has connected thereto a pipe section **18** as shown more clearly in FIG. 1A. The lower end of section **18** is provided with an internal annular shoulder or stop **20**.

In carrying out this new method, the inflatable material **12** is first lowered into the borehole **10**. The cementitious material is then used to inflate the inflatable metal material **12** into tubular form. The inflatable material **12** is cut. The cut end is fitted over the exit line of cement pump **38**. The cementitious material is then pumped down the inflated metal tube and up the annulus formed by the inflated tubular member and the sides of the borehole to completely fill the annulus. As shown in FIG. 3, the cementitious material may be flowed down the tubing **12** and up the tubing-borehole annulus by means of a plug member **30** which is adapted to seat on the annular seating portion **20**. The plug member **30** is forced down the inflated member **12** by means of a liquid such as salt water **32** behind the plug **30**.

The pressure required to cause this flow will squeeze the cementitious material into the annulus to reinforce the hole wall. Once the annulus is full, the material can be allowed to set up. The inflated tubular member **12** may be properly centered or spaced within the hole by the provision of a plurality of centralizer buttons **34** which can be molded directly onto the ribbon **12**.

After the cementitious material has been allowed to set, the liquid **32** may be removed from the tubular member **12** or used as a well completion fluid in the same manner as in a well using conventional casing. The liquid **32** can be mud or oil, as well as salt water. The new casing or borehole lining is then complete. This lining or casing, as shown in FIGS. 3 and 4, comprises the inflated metal member **12** of less diameter than the borehole and the set cementitious material **36** in the annulus formed by the inflated tubular member **12** and the sides of the bore hole **10**.

Examples of cementitious material which may be utilized are cement, phenol-formaldehyde plastic, epoxy resin, polystyrene resins, acrylic resins, butadiene, styrene coplymer resin, and others.

We claim:

1. A method of forming a lining in a borehole comprising the steps of: lowering a nontubular light-weight, low-strength elongate metal member having a longitudinal passage formed therethrough; applying a pressure through the longitudinal passage to change the shape of said metal member to form a tubular member-borehole annulus; pumping cementitious material down the tubular member and up the tubular member-borehole annulus to fill said annulus with the cementitious material; and allowing the cementitious material to set, thus providing a borehole lining.

2. A method of forming a lining in a borehole in accordance with claim 1 wherein the light-weight, low-strength elongate metal member lowered into the borehole is ribbon-shaped with a longitudinal slit formed therethrough parallel to the longer sides of the ribbon.

References Cited in the file of this patent

UNITED STATES PATENTS

1,233,888	Leonard	July 17, 1917
1,563,520	Owen	Dec. 1, 1925
3,028,915	Jennings	Apr. 10, 1962