May 28, 1963 B. EDWARDS 3,091,360

NESTABLE CUP

Filed Oct. 29, 1958 2 Sheets-Sheet 1

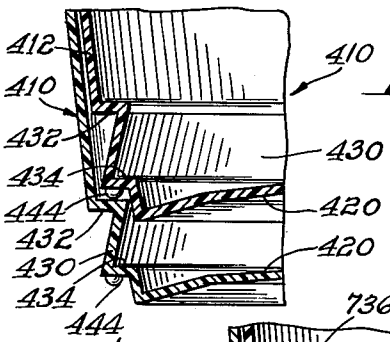

Fig. 13.

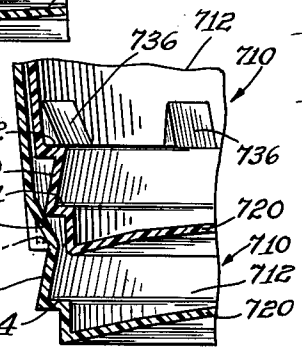

Fig. 14.

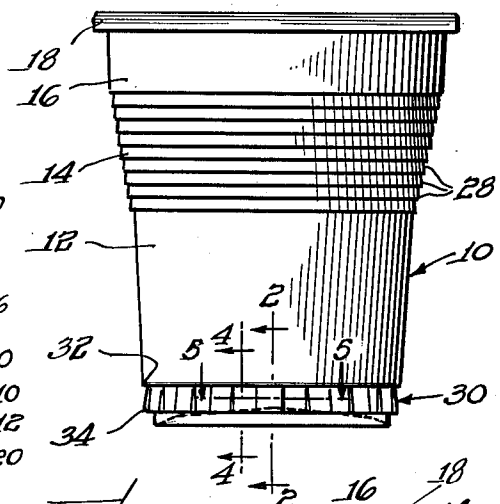

Fig. 1.

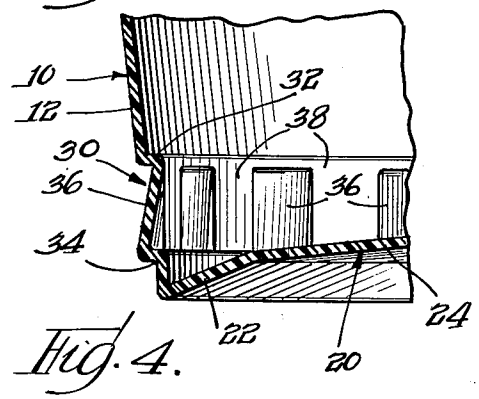

Fig. 2.

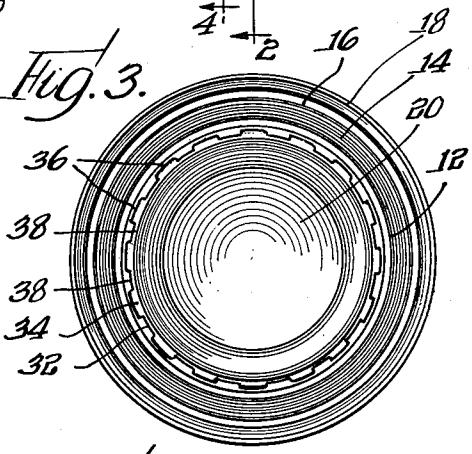

Fig. 3.

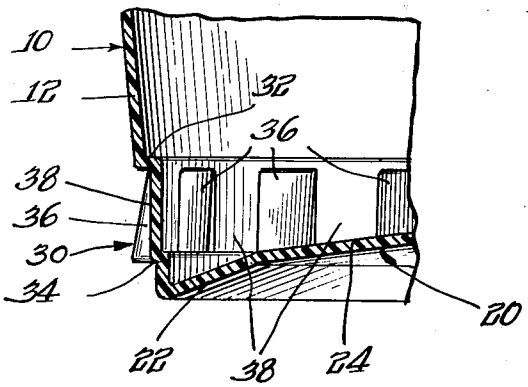

Fig. 4.

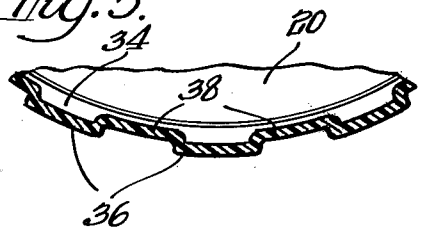

Fig. 5.

INVENTOR.
Bryant Edwards
BY:
Olson & Trexler
Attys.

May 28, 1963 B. EDWARDS **3,091,360**

NESTABLE CUP

Filed Oct. 29, 1958

2 Sheets-Sheet 2

Fig. 6.

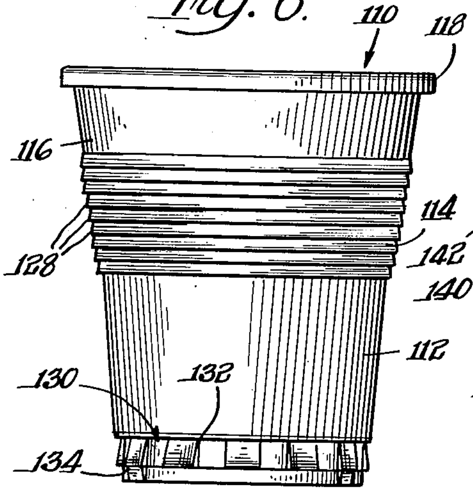

Fig. 7.

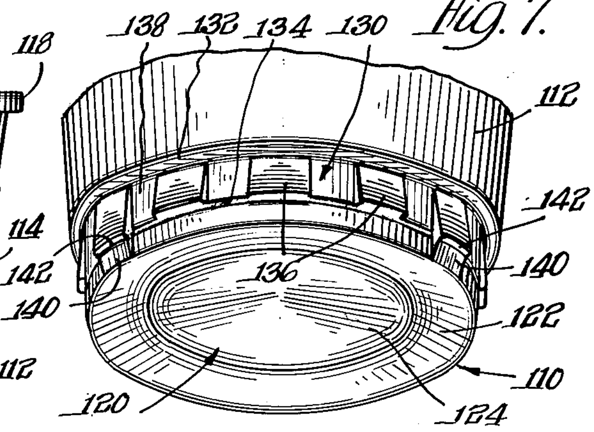

Fig. 8

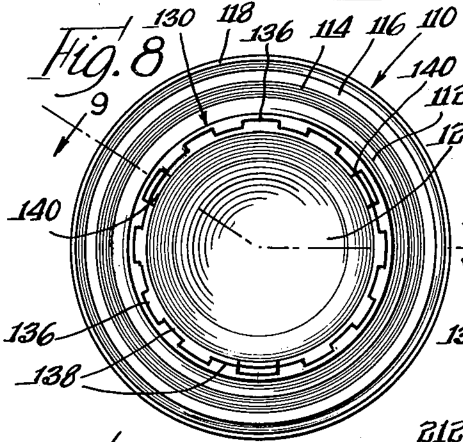

Fig. 9.

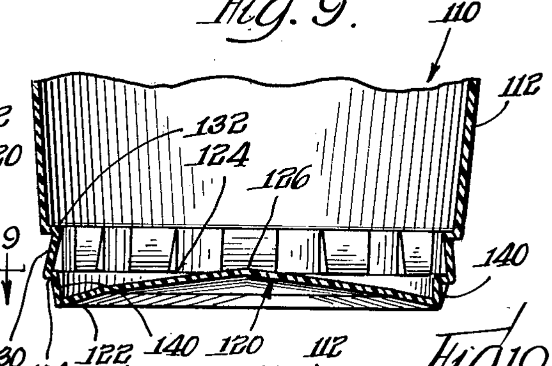

Fig. 10.

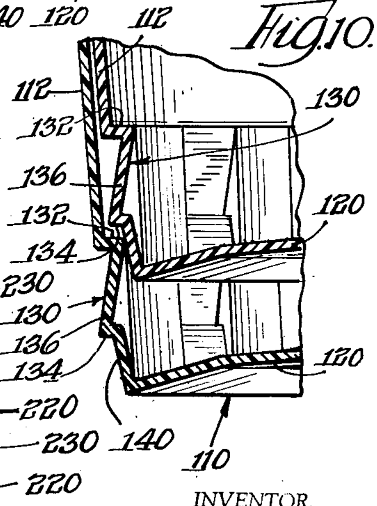

Fig. 11.

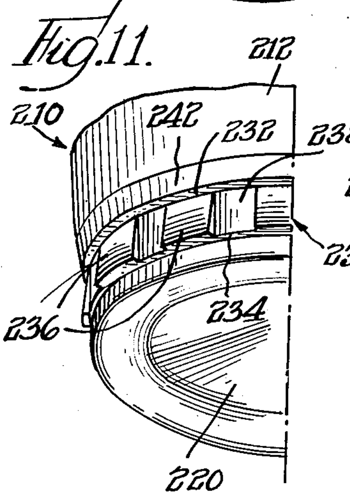

Fig. 12

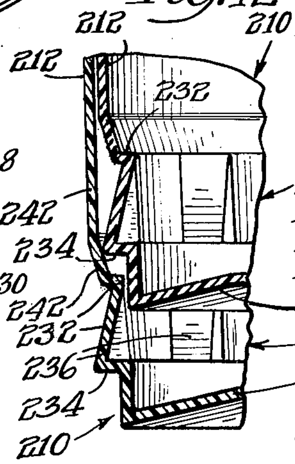

INVENTOR.

Bryant Edwards

BY

Olson & Trexler

attys.

United States Patent Office

3,091,360

Patented May 28, 1963

1

3,091,360
NESTABLE CUP

Bryant Edwards, Oak Park, Ill., assignor to Illinois Tool Works Inc., a corporation of Delaware

Filed Oct. 29, 1958, Ser. No. 769,057
10 Claims. (Cl. 220—97)

This invention is concerned with the art of beverage containers, and most particularly with a cup of the expendable or throw-away variety.

As is well known, there are expendable cups made of impregnated paper, and even some of plastic. Such cups are used on picnics and the like, and are widely used in beverage vending machines, such as coffee machines and soft drink machines. As will be appreciated, economy of storage space dictates that a plurality of cups, in a vending machine, for example, must be stored in a tubular magazine with the cups telescoped within one another. When a beverage is to be dispensed, the bottom cup is dropped from the stack in the magazine into position to receive the beverage.

In the past, it has often been found that the bottom cup would not drop satisfactorily. It has been quite easy for the cups to become wedged together to the extent that the rather light weight of the bottom cup is insufficient to cause it to drop from the stack. Furthermore, the cups have necessarily hugged one another tightly, and the introduction of air between the bottom cup and the next adjacent cup has accordingly been slow, whereby air pressure tends to hold the bottom cup on the bottom of the stack. As a result, the bottom cup drops too slowly, or not at all.

Accordingly, it is an object of this invention to provide a cup, particularly a throw-away cup, which is so configured that a plurality of such cups can be stacked in telescopic relation without wedging together.

Furthermore, it is an object of this invention to provide a cup having a step or shelf intermediate its top and bottom edges whereby such steps or shelves support telescopically stacked cups to maintain the cups in stacked relation just short of maximum telescoping, whereby it is a simple matter to separate a cup from the telescoped stack.

More particularly, it is an object of this invention to provide a frusto-conical cup having a shelf or step intermediate its top and bottom margins, such shelf being cooperable with a complementary part of the similar cup to support the cups in nested relation short of total telescoping whereby individual cups are readily separated from the stack of nested cups.

One serious problem still remains, that the cups may present a very rigid column. When such a column is dropped, as is quite likely in shipment or handling, the paper box or carton holding the column of cups is very likely to burst. Furthermore, the step by step dropping of the stack of cups in a vending machine is likely to cause damage to the mechanism of the vending machine when the stack of cups is rigid.

Accordingly, it is an object of this invention to provide a plastic cup which can be stacked in nested or telescoped relation with a plurality of like cups without sticking together by wedging or by air entrapment, which stack of cups is resilient.

More particularly, it is an object of this invention to provide such a cup which is configured to take advantage of the inherent resiliency of the plastic material for providing a resilient stack of cups.

Other and further objects and advantages of the present invention will be apparent from the following description when taken in connection with the accompanying drawings wherein:

2

FIG. 1 is a side view of a cup constructed in accordance with the principles of the present invention;

FIG. 2 is a vertical sectional view as taken along the line 2—2 in FIG. 1;

FIG. 3 is a top view of the cup of FIG. 1;

FIG. 4 is a vertical sectional view as taken along the line 4—4 in FIG. 1;

FIG. 5 is a horizontal sectional view as taken along the line 5—5 in FIG. 1;

FIG. 6 is a front elevational view of a cup constructed in accordance with this invention;

FIG. 7 is a fragmentary, perspective view of the bottom of the cup of FIG. 6;

FIG. 8 is a top view of the cup;

FIG. 9 is a fragmentary, longitudinal, sectional view as taken substantially along the line 9—9 in FIG. 8;

FIG. 10 is a fragmentary, sectional view showing the stacking of cups according to FIGS. 6–9;

FIG. 11 is a fragmentary, perspective view similar to a portion of FIG. 7 and showing a modified form of the invention;

FIG. 12 is a longitudinal, sectional view through a stack of cups of the type shown in FIG. 11;

FIG. 13 is a longitudinal sectional view at the bottom of a stack of cups of modified construction; and

FIG. 14 is another longitudinal sectional view at the bottom of a stack of cups of another modified construction.

The cup as hereinafter described in detail is made of plastic, preferably of high impact polystyrene. Such cups have marked advantages over paper cups which have been impregnated or coated with wax. They present a better feel and taste to the lips, they do not become soggy in use, and they form a substantially perfect vapor barrier so that no moisture condenses on a cool table beneath a cup when the cup contains hot coffee or the like.

Referring now in greater particularity to the drawings, there will be seen a plastic molded or formed cup designated generally by the numeral **10**. This cup, as shown in FIGS. 1–5, has a lower body portion **12** of frusto-conical configuration. The sidewall of the lower body portion **12** forms an angle of approximately 5° with the vertical, tapering upwardly and outwardly. The lower body portion **12** is joined by an intermediate portion **14** of greater taper to an upper body portion **16** of substantially the same taper as the lower body portion. The upper body portion **16** is terminated by an outwardly and downwardly turned lip **18**.

The cup **10** is provided with an integral bottom **20** comprising an annular ring **22** joined to the lower body portion **12** and forming an acute angle with the horizontal. To the ring **22** is secured a cone section **24** having an apex **26** on the central axis of the cup. The relatively sharp angle formed by the junction of the ring **22** with the sidewall allows a person using the cup to rest one or two fingers along the bottom edge of the cup without burning the fingers when hot coffee is contained in the cup, due to the inefficient heat transfer provided by the sharp edge at the junction between these parts. The question of heat transfer is set forth more fully in my copending application "Cup for Hot Beverages," Serial Number 699,679, filed November 29, 1957 now issued into Patent 2,950,350, on September 22, 1959. The present application is a continuation-in-part of application, Serial No. 699,678, filed November 29, 1957, which parent application has since become abandoned. The conical configuration of the central portion of the bottom is of great importance, in that it prevents sagging of the bottom when the cup is filled with coffee or the like.

Attention now is directed to the mid-section or intermediate portion **14**. This mid-section comprises a plurality of stepped cylindrical rings **28**. The particular

configuration of these rings is set forth in greater detail in my aforesaid copending application. These rings serve several purposes. They rigidify the wall of the cup, which is on the nature of only about 0.01 inch in thickness. The rings serve as a convenient finger grip, both due to the stepped nature of the rings, and due to the increased taper of the including cone. Perhaps most important, the dimensions of the rings are so determined as to provide a very inefficient contact with the user's fingers insofar as heat transfer is concerned. Thus, the user may hold a cup full of hot coffee without burning his fingers.

Adjacent the bottom of the cup and spaced up slightly from the bottom, there is provided a relatively high ring **30** of reverse taper. This provides a shelf **32** at the top of the ring. Accordingly, the bottom of the back-tapered ring, as is indicated at **34**, of any given cup rests on the shelf **32** at the top of the back-tapered ring of a subjacent cup nested therewith.

The support through the back-tapered ring **30** makes it unnecessary for the cups to wedge against one another to be supported in nested relation. In fact, there is a slight spacing between the sidewalls of adjacent cups. Accordingly, not only are the cups not wedged together, but there is space for air to enter so that the bottom cup readily can be dropped from the stack. Similarly, the top cup readily can be removed, if this is desired.

In accordance with the foregoing, the cups do not wedge together. However, in some instances, air tends to enter the space between the bottom of one cup and the next cup above at too slow a rate, and the bottom cup may be a little slow in dropping. In order to prevent such air entrapment, further structure is provided as hereinafter set forth. The section adapted for stacking the cups includes a plurality of protuberances or nibs **36** circumferentially spaced as at **38** about the cup. Accordingly, the supporting edge **34** is provided at the bottom edges of the nibs **36**, while the shelf **32** is provided at the top thereof. As will be apparent from the drawings, the nibs or protuberances **36** are wedge-shaped, having substantially straight vertical edges, and being reversely tapered relative to the taper of the cup.

As will be apparent, the supporting edge at **34** of one cup rests on the supporting shelf **32** of the next cup below it. As will be apparent, there is necessarily an air space between the bottoms of the adjacent cups, and the spaces **38** between the protuberances or nibs **36** provide air channels for venting air into this space. Thus, the cups do not wedge together, and also do not stick together due to air trapped in the cups.

From the foregoing, it will be seen that there has been herein disclosed an improved molded or formed plastic cup having all of the advantages of plastic construction, and possessing a further advantage in that the cups can be stacked or nested without any possibility of wedging together, and positively admitting air between adjacent cups, whereby a single cup readily can be removed from the stack. Besides providing for ready separability of the stacked or nested cups, the back tapered stacking ring imparts a desirable strength or rigidity to the cup. In addition, it may aid in inhibiting heat transfer from hot coffee or the like to the user's fingers. On the other hand, the provision of the stacking ring produces no important diminution in the volume of capacity of the cup. Furthermore, the axial space occupied by the stacked or nested cups is not increased substantially over that of conventional tapered cups which are wedged together. In one form of the invention, means is presented for venting air from the bottoms of the cups to facilitate separation of the cups.

Referring now to the embodiments of the invention providing a resilient stack, and first to FIGS. 6–10, there will be seen a thin walled plastic cup designated generally by the numeral **110**. This cup is made of plastic, preferably high impact polystyrene, and has a lower body portion **112** of frusto-conical configuration. The side wall

of the lower body portion **112** preferably forms an angle of approximately 5° with the vertical, tapering upwardly and outwardly. The lower body portion **112** is joined by an intermediate portion **114** of greater taper to an upper body portion **116** of substantially the same taper as the lower body portion. The upper body portion **116** is terminated by an outwardly and downwardly curved lip or rim **118**.

The cup **110** is provided with an integral bottom **120** comprising an annular ring **122** joined to the lower body portion by structure hereinafter to be described. A cone section **124** is secured to the ring **122**, and has an apex **126** on the central axis of the cup. The relatively sharp angle formed by the junction of the ring **122** with the side wall allows a person holding the cup to rest one or two fingers along the bottom edge of the cup without burning the fingers when a hot beverage, such as coffee, is contained in the cup. This is due to the inefficient heat transfer provided by the sharp edge at the junction between these parts. Heat transfer further is inhibited in the intermediate portion **114** of the cup, due to the sharp corners provided by the plurality of step rings forming this section. In addition, the step rings **128** forming the intermediate portion **114** rigidify the wall of the cup, which is in the nature of only 0.01 inch in thickness. The rings further serve as a convenient finger grip, due to the stepped nature of the rings, and due to the increased taper of the including cone.

In addition to the foregoing, the cup is provided near the bottom thereof with a relatively high ring **130** of reverse taper relative to the cup. This provides a shelf **132** at the top of the ring, and a step or rest at the bottom thereof as indicated at **134**. When a plurality of cups is stacked together, the step or rest **134** of one cup is supported on the shelf **132** of the immediately subjacent cup of a telescoped or nested stack of such cups. This prevents wedging together of the cups.

Furthermore, associated with the ring **130** is a plurality of circumferentially spaced teeth, projections or nibs **136**. These nibs are circumferentially spaced apart, there being spaces **138** between them. As will be apparent, these spaces provide for venting air from a pocket between adjacent cups. Each of the nibs **136** is wedge shaped, having a reverse taper relative to the cup.

As will be observed, at the base of certain of the nibs **136**, there is provided a tapered protuberance, wedge or cam surface **140**. The taper of these protuberances, wedges or cam surfaces is opposite to that of the nibs **136**, and it will be observed that the wedges extend down from the lower shoulder means and radially out from a side wall but do not extend radially out so far as the nibs, thereby providing shoulders **142** beneath each of the associated nibs. Only a few of the nibs have such cam surfaces or wedges, and specifically, in the illustrative example there are three such cam surfaces or wedges which are equally, arcuately spaced about the cup.

The function of these wedges is to cause telescoping cups to move slightly out of round. In other words, each cup is forced inwardly slightly in the vicinity of the wedges, while a cup externally thereof is forced outwardly slightly where engaged by a wedge. Conversely, the outer cup pulls in slightly short of a true circle intermediate the outwardly bulged or bowed portions. As a result, the rest or step **134** of one cup does not immediately engage on the subjacent shelf **132**, but must cause a certain amount of cup deformation previously. As will be apparent, the wedging engagement is quite localized at distinct points as this prevents the engagement from being sufficient to cause the cups to stick together. It has been found in actual practice that a stack of cups so associated is quite resilient, and yet readily drops the bottom cup gravitationally when the weight of the stack is supported by the next to the bottom cup. As will be apparent, the wedges further cause a centering or guiding action between adjacent cups insuring proper

alignment thereof, with consequent proper engagement of the shoulders of adjacent cups.

A modification of the invention is shown in FIGS. 11 and 12 for providing a resilient stack. Parts in these two figures are generally similar to those in FIGS. 6–10, and similar numerals are utilized but in the 200 series, rather than in the 100 series. In so far as the termination of the numbers is similar, further description is unnecessary. A distinguishing feature is that there are no wedges or ramps below the nibs **236**. Rather, the shelf **232** is joined to the adjacent sidewall **212** by a tapered or frustoconical section at **242**. All of the nibs lie against this tapered surface, and are cammed inwardly as the cups are pushed together. The tapered or frustoconical surface **242** is engaged on the inside, and stretched somewhat into rounded shape. As will be apparent, it also pulls in slightly between adjacent nibs. The taper is sufficiently abrupt that, coupled with the sharp corner of the cooperating shelf **234**, there is no sticking together by wedging.

Further embodiments or modifications of the invention are shown respectively in FIGS. 13 and 14.

In the embodiment of FIG. 13, similar numerals being used in the 400 series, the cups **410** are similar to those heretofore shown and described, having a continuous stacking ring, rather than the series of nibs, and lacking any slanting or wedging surfaces. Instead, the underside of the step or rest **434** is provided at circumferentially spaced locations with downward bumps or protuberances **444**. As will be apparent, when the stack of these cups is urged axially together, as under their own weight, the rest **444** of each cup is deflected upwardly in the vicinity of each protuberance, and conversely the shelf **434** is deflected downwardly beneath each protuberance. Again, the inherent flexibility of the plastic material coacts with this configuration of parts to impart a resilient action to the stack of cups.

The form of the invention shown in FIG. 21 departs somewhat from that heretofore shown and described.

In the embodiment of the invention shown in FIG. 14 the cup is more nearly like that shown in FIGS. 6–10. A stacking ring of reverse taper is provided at **730** in each cup, there being a supporting shelf **732** at the top thereof, and a rest or step **734** at the bottom thereof. The distinguishing feature of this form of the invention resides in the provision of a plurality of inwardly directed nibs **736** positioned above the shelf **732** in each instance. The upper surfaces of these nibs are inclined outwardly at a greater angle than the adjacent sidewall **712** of the cup and accordingly the nibs **736** are cammed outwardly, corresponding portions of adjacent cups being deflected somewhat inwardly in the vicinity of the rest **734** upon stacking of the cups. Again, the camming action, and the resiliency of the plastic result in a resilient stack of cups.

In all of the embodiments of the invention heretofore shown and described, the outlines of the cup are generally the same. In each instance, sections are provided for utilizing the inherent resiliency of the plastic, either directly, or by a wedging action or by both, whereby to impart a resilient characteristic to a stack of such cups telescoped together. The wedging or deforming sections comprise nibs or protuberances, thereby presenting between them air vents affording passage for escape of air, or more correctly entrance of air into the pockets formed between adjacent cups, whereby to prevent the cups from sticking together by air pressure when an attempt is made to drop them one by one gravitationally.

It is to be understood that the specific example of the invention herein shown and described is for illustrative purposes only. Various changes in structure will no doubt occur to those skilled in the art, and will be understood as forming a part of this invention in so far as they fall within the spirit and scope of the appended claims.

The invention is claimed as follows:

1. A one-piece nestable circular cup of thin walled plastic construction and of a size to be gripped and lifted by one hand, comprising a recessed bottom and a sidewall integral therewith, said sidewall being joined to said recessed bottom at a circumferential bottom margin and tapering generally upwardly and outwardly therefrom in diverging relation to an upper margin defining an open upper end, said upper margin having a rim of predetermined axial extent which is of sufficient increased thickness relative to the thickness of the thin plastic sidewalls to lend required lateral strength at said open upper end, said sidewalls having circumferential stacking ring means formed therein, positioned below said upper margin and having an axial extent greater than the axial extent of the thickened rim portion, said stacking ring means having at its lower extremity circumferentially disposed externally projecting shoulder means and having at its upper extremity circumferentially disposed internal shoulder means of smaller minimum diameter than the maximum diameter of said external shoulder means and spaced upwardly from said recessed bottom, said internal shoulder means adapted to form a shelf to coact with the complementary external shoulder means of a like container to positively limit the extent of telescopic association of said containers, at least circumferentially spaced portions of said stacking ring means located beneath and providing a support for said internal shoulder means, said support converging toward the cup axis from bottom to top sufficiently to increase lateral strength of the stacking ring means and to increase radial extent of the internal shoulder means, and at least one of said shoulder means having separate means associated therewith for cooperation with a shoulder means of a nested cup to provide a circumferentially discontinuous area to assure air communication between completely nested cups and consequent freedom of individual cup separation from a stack, the inherent flexibility of the thin plastic material of the cup in combination with the aforesaid structural features serving to impart resilient action to a stack of nested cups without jamming when such cups are subjected to axial pressure.

2. A one-piece nestable circular cup of thin walled plastic construction as set forth in claim 1 wherein the stacking ring means is located in the vicinity of the bottom of the cup.

3. A one-piece nestable circular cup of thin walled plastic construction as set forth in claim 1 wherein the means associated with at least one of said shoulder means to assure air communication between completely nested cups includes circumferentially spaced sections of the cup wall material.

4. A one-piece nestable circular cup of thin walled plastic construction as set forth in claim 1 wherein the means associated with at least one of said shoulder means to assure air communication between completely nested cups includes circumferentially spaced sections of the wall of the cup projecting radially outwardly and positioned beneath of the external shoulder means.

5. A one-piece nestable circular cup of thin walled plastic construction as set forth in claim 1, wherein the means associated with at least one of said shoulder means to assure air communication between completely nested cups includes circumferentially spaced sections of the wall of the cup projecting radially inwardly and positioned above the external shoulder means.

6. A one-piece nestable circular cup of thin walled plastic construction as set forth in claim 1, wherein the means associated with at least one of said shoulder means to assure air communication between completely nested cups includes a wall portion of limited axial dimension extending downwardly from the external shoulder means and having a maximum diameter less than the internal diameter of said internal shoulder means.

7. A one-piece nestable circular cup of thin walled plastic construction as set forth in claim 1 wherein the means associated with at least one of said shoulder means

to assure air communication between completely nested cups includes spaced protuberances projecting downwardly from the under side of the external shoulder means adapted to rest upon the upper surface of the internal shoulder means of a like cup when said cups are completely nested.

8. A one-piece seamless cup of thin walled plastic construction and of a size to be substantially encompassed and to be lifted by one hand, comprising a bottom and side walls integral therewith, said side walls being joined to said bottom at a circumferential bottom margin and tapering generally upwardly and outwardly therefrom in diverging relation to an upper circumferential margin defining an open upper end, said side walls having circumferential stacking ring means formed therein, positioned below said upper margin, said stacking ring means having at its lower extremity externally projecting shoulder means and having at its upper extremity internal shoulder means of smaller minimum diameter than the maximum diameter of said external shoulder means to form a shelf adapted to co-act with the complementary external shoulder means of a like container in limiting the extent of telescopic association of said containers, and a plurality of circumferentially spaced protuberances extending down from said lower shoulder means and radially out from said side walls, the maximum diameter of said protuberances exceeding the minimum diameter of said internal shoulder means and said protuberances being engageable with the internal shoulder means of a like subjacent cup during telescopically concentric association with such like cup for properly positioning the external shoulder means of one cup relative to the complemental internal shoulder means of the subjacent like cup.

9. A one-piece seamless cup of thin walled plastic construction and of a size to be substantially encompassed and to be lifted by one hand, comprising a bottom and side walls integral therewith, said side walls being joined to said bottom at a circumferential bottom margin and tapering generally upwardly and outwardly therefrom in diverging relation to an upper circumferential margin defining an open upper end, said side walls having circumferential stacking ring means formed therein, positioned below said upper margin, said stacking ring means having at its lower extremity externally projecting shoulder means and having at its upper extremity internal shoulder means of smaller minimum diameter than the maximum diameter of said external shoulder means to form a shelf adapted to co-act with the complementary external shoulder means of a like container in limiting the extent of telescopic association of said containers, and a plurality of circumferentially spaced protuberances extending down from said lower shoulder means and radially out from said side walls the maximum diameter of said protuberances exceeding the minimum diameter of said internal shoulder means and said protuberances being engageable with the internal shoulder means of a like subjacent cup during telescopically concentric association with such like cup for properly positioning the external shoulder means of one cup relative to the complemental internal shoulder means of the subjacent like cup, said protuberances being wedge shaped, tapering from said side walls up and out toward the lower shoulder means.

10. A one-piece seamless cup of thin walled plastic construction comprising a bottom and side walls integral therewith, said side walls being joined to said bottom at a circumferential bottom margin and tapering generally upwardly and outwardly therefrom in diverging relation to an upper circumferential margin defining an open upper end, said side walls having circumferential stacking ring means formed therein, positioned below said upper margin, said stacking ring means having at its lower extremity externally projecting shoulder means and having at its upper extremity internal shoulder means, said stacking ring means comprising a plurality of circumferentially spaced sections having a back taper thereto converging from bottom to top, intervening stacking ring means portions having a different taper from said spaced sections, at least one of said shoulder means thereby being circumferentially discontinuous to admit air to the space between adjacent cups to facilitate separation thereof, the minimum diameter of said internal shoulder means and the maximum diameter of said external shoulder means differing in radius by more than the thickness of said side walls, the internal shoulder means forming a shelf adapted to coact with the complementary external shoulder means of a like cup in limiting the extent of telescopic association of said cups, and a plurality of circumferentially spaced radial protuberances on said side walls immediately adjacent and extending axially downwardly from said stacking ring means and engageable with one of the shoulder means of a telescopically adjacent cup for guiding one cup into telescopically concentric association with a like cup.

References Cited in the file of this patent

UNITED STATES PATENTS

703,745	Seaman	July 1, 1902
795,437	Geuder	July 25, 1905
1,937,402	Cherry	Nov. 28, 1933
2,088,181	Swift	July 27, 1937
2,208,431	Rochow	July 16, 1940
2,420,215	Wiley	May 6, 1947
2,530,124	Kiechkefer	Nov. 14, 1950
2,563,352	Morse	Aug. 7, 1951
2,606,586	Hill	Aug. 12, 1952
2,630,244	Brock	Mar. 3, 1953
2,717,619	Whitman	Sept. 13, 1955
2,805,790	Smucker	Sept. 10, 1957
2,816,697	Amberg	Dec. 17, 1957
2,905,350	Edwards	Sept. 22, 1959
2,907,491	Gunn	Oct. 6, 1959

FOREIGN PATENTS

530,975	Belgium	Aug. 31, 1954
215,113	Switzerland	Sept. 1, 1941
69,217	Norway	Apr. 30, 1945
134,201	Austria	July 25, 1933