March 26, 1963 W. R. SCHELLER 3,083,345

ELECTRICAL CONNECTOR

Filed Nov. 21, 1960 3 Sheets-Sheet 1

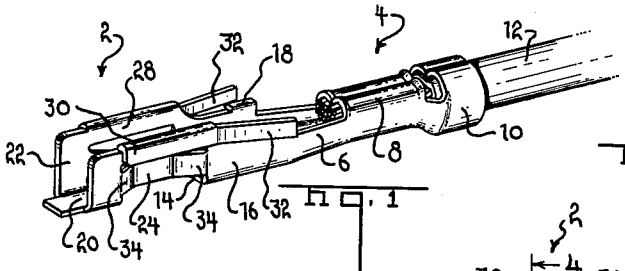

Fig. 1

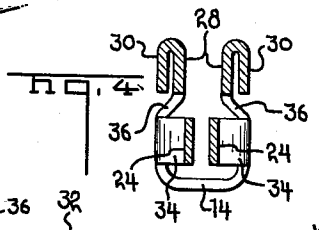

Fig. 4

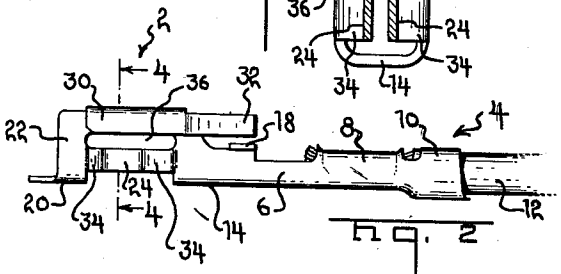

Fig. 2

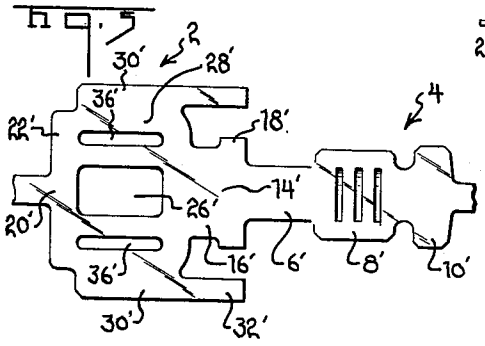

Fig. 5

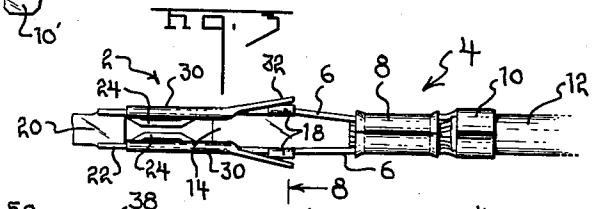

Fig. 3

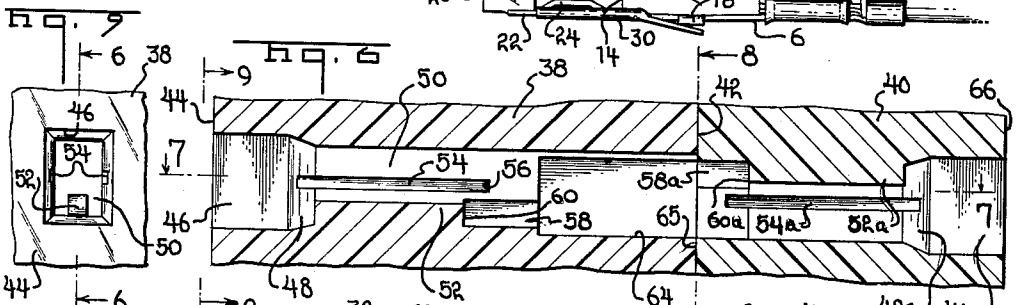

Fig. 9

Fig. 6

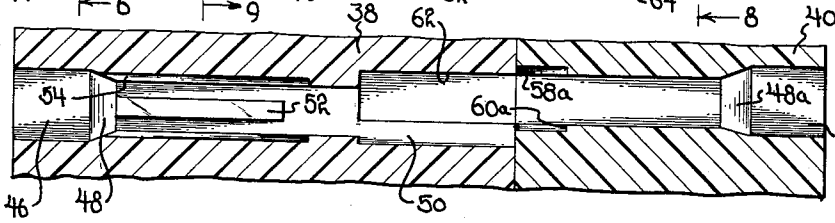

Fig. 7

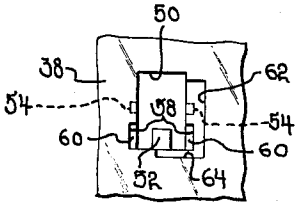

Fig. 8

INVENTOR.
WILFRED R. SCHELLER
BY
Curtis, Morris & Safford

March 26, 1963 W. R. SCHELLER 3,083,345

ELECTRICAL CONNECTOR

Filed Nov. 21, 1960 3 Sheets-Sheet 2

Fig. 15

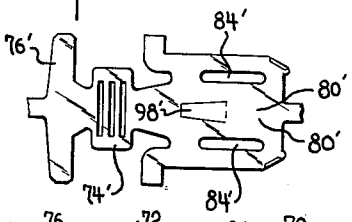

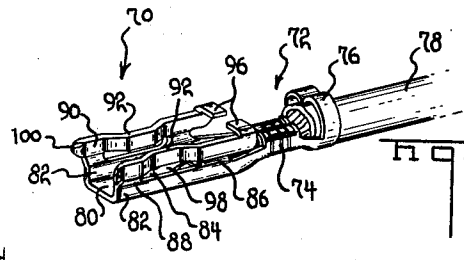

Fig. 13

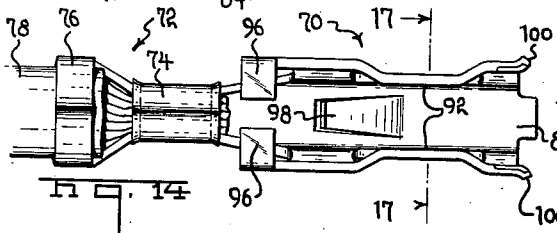

Fig. 14

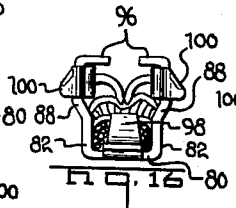

Fig. 16

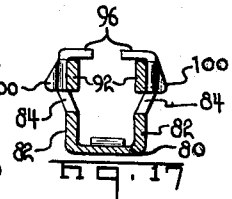

Fig. 17

Fig. 20

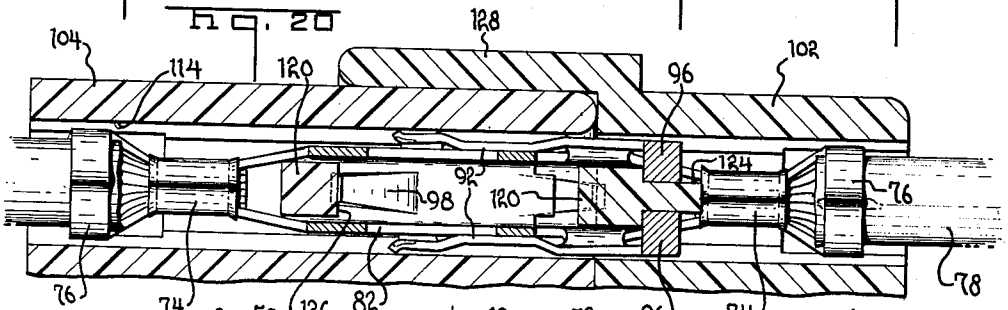

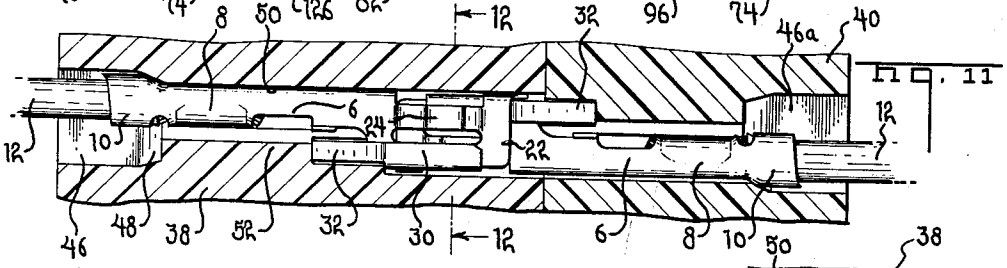

Fig. 11

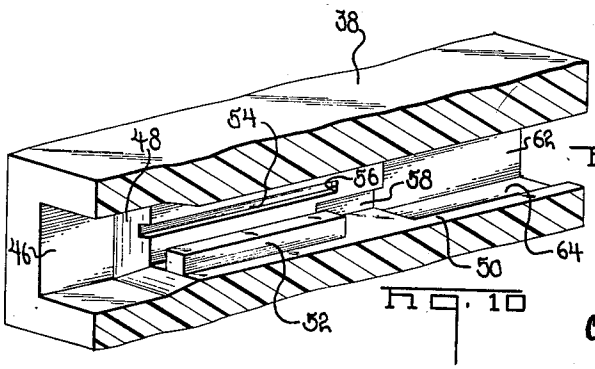

Fig. 10

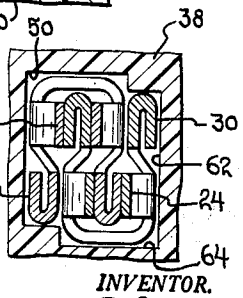

Fig. 12

INVENTOR.
WILFRED R. SCHELLER

BY

Curtis, Morris & Safford

March 26, 1963 W. R. SCHELLER 3,083,345

ELECTRICAL CONNECTOR

Filed Nov. 21, 1960 3 Sheets-Sheet 3

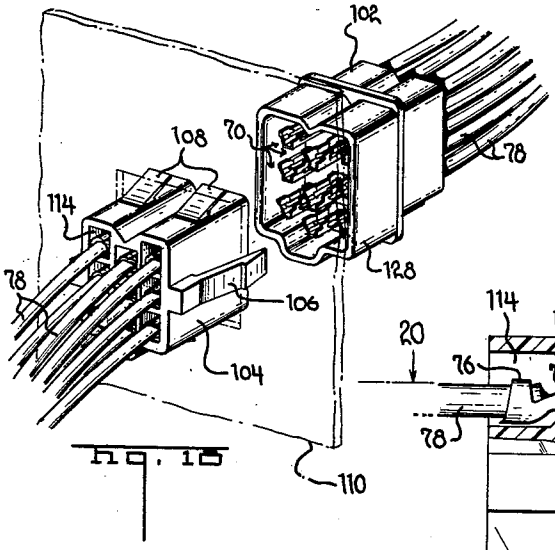

Fig. 18

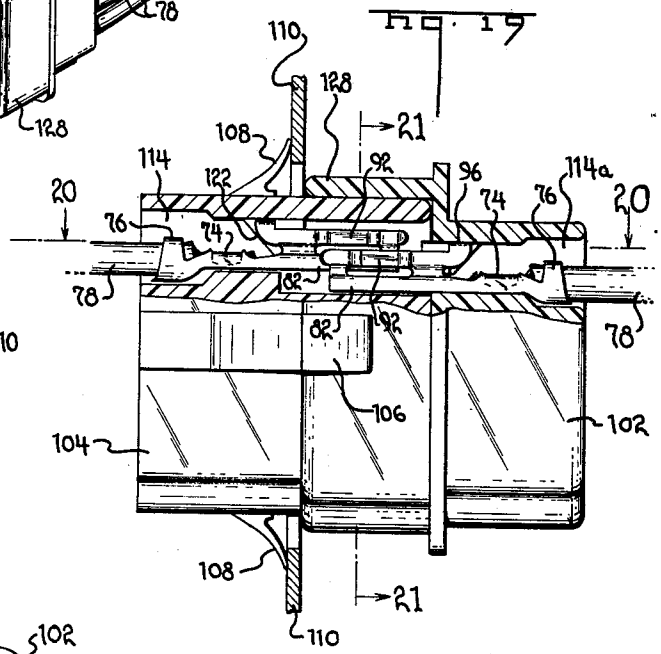

Fig. 19

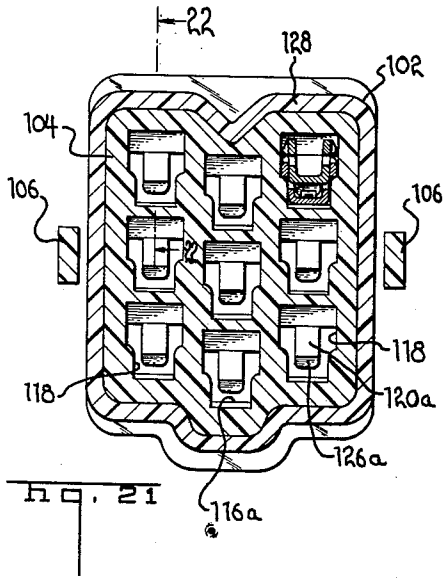

Fig. 21

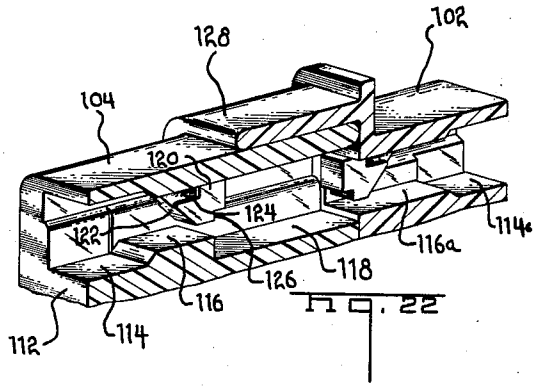

Fig. 22

INVENTOR.
WILFRED R. SCHELLER

BY

Curtis, Morris & Safford

United States Patent Office

3,083,345

Patented Mar. 26, 1963

1

3,083,345

ELECTRICAL CONNECTOR

Wilfred R. Scheller, New Cumberland, Pa., assignor to AMP Incorporated, Harrisburg, Pa.

Filed Nov. 21, 1960, Ser. No. 70,533
6 Claims. (Cl. 339—47)

This invention relates to electrical connectors of the type adapted to form disengageable electrical connections between conductors.

An object of the invention is to provide an improved disengageable electrical connecting means. A further object is to provide an electrical connector which is engageable with a duplicate connector to form a disengageable electrical connection. A still further object is to provide an electrical connector which is engageable with a duplicate connector to form a connection which does not require an extraneous holding means such as a dielectric block. A still further object is to provide a disengageable electrical connection comprising individual electrical connectors which can be made from relatively thin stock metal and in relatively small sizes without sacrifice of electrical or mechanical integrity. A still further object is to provide disengageable electrical connectors which are mechanically foolproof in the sense that they cannot be mated with each other or with other mating electrical connector parts excepting in the proper and intended manner.

These and other objects of the invention are achieved in an electrical connector of generally channel-shaped cross section having an enclosed elongated slot in each of the sidewalls of the channel. The longitudinally-extending portions of the sidewalls adjacent to these slots function as springs which are integral at each end with the channel sidewalls and which, upon insertion of a mating connector part, establish electrical contact therewith. The provision of springs of this type, which are integral at each end with the connector itself, assures the development of the required contact pressure for a high quality connection and the connectors can, furthermore, be formed of relatively thin stock material. Connectors in accordance with the invention can take alternative forms; for example, the contact springs in the channel sidewalls can be formed adjacent the longitudinal edges of these sidewalls and the width of the connector can be made such that two connectors can be stacked or nested with their axes in parallel relationship. In this embodiment, the longitudinally extending contact springs of the one connector then grip the base of the channel-shaped cross section of the other connector. In another embodiment of the invention, the contact springs are formed in the channel sidewalls at a location intermediate between the sidewall edges and the web of the channel, and the spacing between these opposed faces of the springs is made such that two duplicate connectors can be mated with each other by aligning them in inverted, parallel and offset relationship and moving them relatively together so that the sidewall of each connector is gripped between the contact springs of the other connector. This embodiment has the advantage of providing two mechanically separate but electrically common zones of contact.

Both embodiments permit the attainment of adequate contact pressures for a high quality connection with relatively thin stock material and with connectors formed in relatively small sizes. The principles of the invention are thus highly advantageous in connection with the formation of disengageable electrical connections between relatively small wires, i.e. AWG 14–26. Connectors in accordance with the invention can, as mentioned above, be mated with duplicate connectors and this is generally reckoned as an advantageous feature since it reduces the

2

number of parts which must be utilized to form disengageable connections. An added feature is, however, that the embodiments of the invention disclosed herein can also be mated with simple terminal devices, such as tabs, which are commonly used in the manufacture of electrical devices having wires which must be connected to the wires in other devices at a place and time remote from the time and place of manufacture.

In the drawing:

FIGURE 1 is a perspective view of an electrical connector in accordance with the invention.

FIGURE 2 is a side view and FIGURE 3 is a top plan view of the embodiment of FIGURE 1.

FIGURE 4 is a sectional view taken along the lines 4—4 of FIGURE 2.

FIGURE 5 is a plan view of the punched-out blank from which the connector of FIGURE 1 is formed.

FIGURE 6 is a longitudinal sectional view taken along lines 6—6 of FIGURE 9 showing a pair of dielectric blocks having aligned cavities therein intended for reception of connectors of the type shown in FIGURE 1.

FIGURE 7 is a view taken along the lines 7—7 of FIGURE 6.

FIGURE 8 is a view taken along the lines 8—8 of FIGURE 6.

FIGURE 9 is a view taken along the lines 9—9 of FIGURE 6 and showing the rear or back surface of one of the dielectric blocks.

FIGURE 10 is a perspective view showing the form of the cavity intended for the connector of FIGURE 1.

FIGURE 11 is a view similar to FIGURE 6 but showing connectors in the dielectric blocks and in mated relationship with each other.

FIGURE 12 is a view taken along the lines 12—12 of FIGURE 11.

FIGURE 13 is a perspective view of an alternative embodiment of the invention.

FIGURE 14 is a top plan view of the connector of FIGURE 13.

FIGURE 15 is a plan view of the blank from which the connector of FIGURE 13 is formed.

FIGURE 16 is an end view of the connector of FIGURE 13.

FIGURE 17 is a view taken along the lines 17—17 of FIGURE 14.

FIGURE 18 is a perspective view showing a pair of connector blocks having connectors in accordance with FIGURE 13 disposed therein.

FIGURE 19 is a side view with parts broken away showing the dielectric blocks of FIGURE 18 in their assembled relationship to a panel.

FIGURE 20 is a view taken along the lines 20—20 of FIGURE 19.

FIGURE 21 is a view taken along the lines 21—21 of FIGURE 19 but showing mated connectors in only one of the cavities in the blocks; and

FIGURE 22 is a perspective view taken along the lines 22—22 of FIGURE 21.

Referring now to FIGURES 1–5 of the drawing, in accordance with one embodiment of the invention the connector has a contact portion generally indicated at 2 and a crimp portion 4. The crimp portion comprises a wire crimp 8, which secures the connector to the conducting core of a wire, and an insulation crimp 10 which secures the connector to the insulating sheath of a wire 12. In the disclosed embodiment the contact portion and the crimp portion are in axial alignment with each other, however, if desired the contact portion can extend obliquely or transversely of the crimp portion to meet specialized requirements. It is also feasible to secure the connector onto the wire end by alternative forms of crimps or in some manner other than crimping.

The crimp portion 4 is joined to the contact portion by means of a generally divergent channel-shaped transition section 6. This transition section merges with a rear channel section of the contact portion having a web 14 and a pair of upstanding sidewalls 16. Ears 18, which extend outwardly of the planes of the sidewalls, are provided to lock the connector within a dielectric block in a manner described below.

The frontal portion of the contact comprises a web 20 having upstanding sidewalls 22 which are substantially coplanar with the sidewalls 16. This frontal channel section 20, 22 and the channel section 14, 16 are connected by means of axially extending elements 24, 34 which function as contact springs. The central portions 24 of these springs are displaced inwardy towards the connector axis and function as contact portions of the spring. The longitudinal edges of the sidewalls 16, 22 which are remote from the webs 14, 20 are also connected to each other by means of axially extending elements 28. These elements are displaced inwardly with respect to the webs, as shown best in FIGURE 4, and their longitudinal edges 30 are reversely bent outwardly to provide a double thickness of metal along these edges. The bent-over edges extend rearwardly of the contact and towards the crimp, as shown at 32, and divergently with respect to the contact axis to provide an additional means for locking the connector in a dielectric block as is also described below.

The connector of FIGURE 1 is advantageously formed from strip metal by progressive die forming operations. FIGURE 5 shows one form of blank which has been stamped from strip metal and which is subsequently bent and formed to produce the connector of FIGURE 1. The various portions of this blank are identified by the same reference numerals, differentiated by means of prime marks, as those used in the foregoing description of the formed connector of FIGURE 1. It will be noted that the two webs 14, 20 are formed by stamping out a rectangular opening 26′ in the blank and that the contact springs 24, 34 are formed by stamping slots 36′ in the blank on each side of the central opening. Connectors of this type are advantageously manufactured in strip form with each connector being integral with the next adjacent connector so that they can be applied to wire ends by means of crimping presses having strip feeding means.

Two connectors of the type shown in FIGURE 1 can be mated with each other by aligning them in offset and inverted relationship with each other and moving them relatively together until each connector has one of its longitudinal edges clamped between the contact springs of the other connector as shown in FIGURE 12. In order to achieve this arrangement, the spacing between the opposed faces of the contact spring portions 24 is made slightly less than the spacing between the external surfaces of the folded-over portions 30 and the internal surfaces 28 of the corresponding longitudinal edges so that the edges 30 will be resiliently gripped between the springs. An added dimensional limitation is that the spacing between the internal surface of each of the contact portions 24 and the surface of its respective sidewall plane, as defined by the sidewalls 16, 22 is made less than the spacing between the opposed surfaces 28 so that the parts can be moved into engagement with each other.

Referring now to FIGURES 6–10, a preferred form of housing for connectors in accordance with the embodiment of FIGURE 1 comprises a pair of blocks 38, 40 providing aligned but offset cavities for reception of the connectors. The block 38 has a frontal wall 42 and a rear wall 44. The cavity extends inwardly from this rear wall and has first a generally rectangular enlarged portion 46 which is intended to receive the insulation crimp. This enlarged portion merges, by means of a truncated pyramidal section 48, with a central cavity section 50 of somewhat reduced cross section. This central section 50 has a centrally located barrier 52 extending partially

therethrough on one of its walls. The adjoining walls are provided with slots 54 which terminate at rearwardly facing shoulders 56. The righthand portion of the cavity in the block 38 is enlarged by an offset opening which extends inwardly from surface 42 and which has walls 62, 64 (FIGURE 8) which are parallel to the walls of the central section 50. A pair of grooves 58 extend from this offset opening into the sidewalls of the central section 50 on each side of barrier 52 and between the grooves 54 and the base of the cavity (as viewed in FIGURES 6 and 8). These grooves terminate in shoulders 60 which face the frontal wall 42.

Block 38 is adapted to receive a terminal of the type shown in FIGURE 1 by axial insertion thereof through the enlarged entrance 46 of the rear wall. Upon such insertion, the ears 18 will move relatively into the grooves 54 until they come to rest against the shoulders 56, and the divergent retaining springs 32 will be compressed by the sidewalls of the opening until they snap outwardly and into the grooves 58 so that the terminal is locked within the cavity. The contact portion of the terminal will then reside within the righthand portion of the opening and will be adjacent to the enlarged portion of the opening which is defined by the walls 62, 64. A properly inserted terminal cannot be withdrawn by virtue of the engagement of the retainer springs 32 with the shoulders 60 and it cannot move further rightwardly into the opening by virtue of the engagement of the ears 18 with the shoulders 56. The block 40 is in most respects similar to the block 38 but is not as thick as block 38 and does not have an enlarged cavity section corresponding to the enlarged section 62, 64. The thickness of block 40 is such that the contact portion of an inserted terminal extends beyond the front wall 65. The details of the cavity of block 40 are identified by the same reference numerals as those used in the description of the block 38 with the letter "*a*" used to differentiate the two parts. Since the two blocks are substantially the same, the block 38 need not be described in further detail. It will be apparent from FIGURES 6 and 7 that in use, the cavity in block 40 is inverted and offset with respect to the cavity of the block 38. This relationship of the cavities permits accommodation of the terminals as shown in FIGURE 12.

The embodiment of FIGURE 1 possesses several specific advantages in addition to the advantages of the generic concept of the invention. Referring to FIGURE 12, it will be seen that since the contact springs 24 of each connector engage the other connector, two mechanically separate but electrically common zones of contact are provided between the two connectors. Thus, if one of the connectors should have a defective contact portion, there remains a second set of contact areas to carry out the intended electrical function of the device. Another distinct advantage is that the electrical contact between the longitudinal edges of the connector and the contact springs is enhanced by virtue of the folded-over portions 30 of the edges. When these edges are folded, any spring back tendency which remains will tend to cause the folded-over portions to move outwardly to a slight extent. Thus, when the two connectors are engaged with each other, these edge portions, if they tend to move at all by virtue of their inherent resiliency will tend to move toward the contact surface of the mating connector.

While connectors of the type shown in FIGURE 1 are usually used in blocks of the types shown in FIGURES 6–10, it is also entirely practical to provide a much simpler form of block, for example, a simple tubular member of suitable dielectric material, and to rely entirely upon the connectors themselves to maintain their engagement with each other. Alternatively, if it is not essential that the connection formed with the connectors of FIGURE 1 be insulated, the connectors can be engaged with each other without the benefit of a surrounding dielectric block and, after engagement, they will remain in

mated relationship by virtue of their interlocked relationship as illustrated in FIGURE 12.

Referring now to FIGURES 13–17, an alternative form of the invention provides a contact portion **70** and a crimp portion **72**. Again, the crimp portion comprises a wire crimp **74** and an insulation crimp **76** to permit attachment to the conducting core and the insulation respectively of a conductor **78**.

The contact portion is again of generally channel-shaped or U-shaped cross section. This contact portion comprises a web **80** having upstanding sidewalls which, in their portions **82** immediately adjacent to the web, are substantially parallel to each other and extend normally of the plane of the web. Enclosed slots **84** extend axially in these sidewalls substantially midway between the web and the longitudinal edges of the sidewalls. At each end of the contact portion and on each side of the slots, the sidewalls **86**, **88** diverge. The remaining longitudinal edge portions **90**, **92** of the channel function as contact springs, the central portions **92** of these edges being inwardly displaced. The spacing between the opposed faces of the contact portions **92** is normally substantially equal to or slightly less than the width of the sidewall portions **82** as shown in FIGURE 17.

The edge portions of the channel extend rearwardly toward the conductor **78** and are bent inwardly to form ears **96** overlying the web of the channel to retain the connector in a block in a manner described below. The web also provides a struck up rearwardly facing tang **98** for this same purpose. The frontal ends of the sidewalls are advantageously divergent with respect to the axis of the channel as shown at **100** to facilitate engagement of a connector of this type with a duplicate connector in the manner described below.

The embodiment of FIGURE 13 is again advantageously formed from strip metal by stamping and forming by progressive die forming operations. FIGURE 15 shows a blank from which the connector of FIGURE 13 is formed, the various parts of this blank being identified by the same reference numerals as those used in FIGURE 13 but differentiated by means of prime marks.

In use, a connector of the type shown in FIGURE 13 can be mated with a duplicate connector by aligning the two connectors in offset relationship, one on top of the other, and moving them relatively together until the lower portions of the sidewall of the upper connector are gripped between the contact springs of the lower connector. Again, the contact springs which establish the electrical contact between the two connectors are integral at each end with the sidewalls of the channel so that relatively low yield strength materials can be employed in the practice of the invention. It is also apparent that the form of the connector of FIGURE 13 is extremely simple and is easily formed and shaped by means of relatively simple and straightforward die forming operation.

FIGURES 18–22 illustrate a pair of connector blocks adapted to receive terminals of the type shown in FIGURE 13. As shown in FIGURE 21, the cavities in the blocks are relatively wider in their upper portions (as viewed in the drawing) than in their lower portions in order to accommodate the enlarged upper portions of the connectors. The cavities have an enlarged entrance portion **114** which merges with a central section **116** of somewhat smaller cross section. A block **120** projects into this central section and has an inclined face **122** and a pair of grooves **124** which face the rear wall of the terminal. The portion of the cavity which is adjacent to the front wall is enlarged as shown at **118**, in order to accommodate the nested contact portions of a pair of mated connectors as shown in FIGURE 19.

As with the previously described embodiment, the connector can be inserted into the cavities of the block only in the proper and intended manner. Thus, the connector must be aligned with the open side of its channel facing the enlarged side of the opening prior to insertion. Upon insertion, the tang **98** is depressed until it passes the depending block **120** at which time it returns to its normal position and lodges against the shoulder **126** thereby to prevent withdrawal of the terminal from the connector block. The inwardly directed ears **96** enter the grooves **124** and abut the shoulders at the ends of these grooves thereby to prevent insertion of the connector into the block beyond the desired point. The mating connector block **102** is in many respects similar to the block **104** but is relatively shorter since the contact portions of the connectors mounted in block **102** must project beyond the face of the block so that they can enter the cavities of the block **104**. The structural features of the block **102** and particularly of the cavities of this block which are similar to, and correspond to, the features of the block and cavities **104** are identified by the same reference numerals differentiated by the letter A.

The blocks **102**, **104** may be provided with suitable means to secure them to a panel. As shown in FIGURE 18, the block **104** may be provided with a pair of wings or arms **106** having hooked ends on two of its sides and on its remaining sides it may be provided with flexible bracing means **108**. With this arrangement, when it is desired to mount the block **104** on a panel, the block is tilted relative to the plane of the panel until one of the arms **106** can be inserted through the panel opening. The block can then be manipulated to position the remaining arm on the opposite side of the panel so that the hooked ends of the arms will prevent withdrawal of the block from the opening in the panel and will function to fix the block with respect to the panel. Mounting arrangements of this type are shown and described in the United States patent to Swengel No. 2,891,103.

It is also advantageous to provide a shroud **128** on the block **102** to protect the protruding contact portions of the terminals mounted in this block. The preferred form of the block shown in the drawing will be noted to provide accommodation for nine pairs of terminals with the terminals arranged in three parallel rows. For closest possible spacing, the center row of terminals is staggered with respect to the outer rows as shown in FIGURE 18.

The embodiment of the invention shown in FIGURE 13 and the embodiment of FIGURE 1 both provide the salient advantage of a contact spring which is formed from the same metal as the terminal itself and which is integral at each end with the body of the terminal. This arrangement has the primary advantage of permitting the attainment of virtually any desired contact pressure even if the terminals themselves are formed of relatively thin material and are formed from a metal having a comparatively low yield point. Heretofore, the attainment of adequate contact pressures and the construction of contact springs in disengageable type electrical connectors has frequently engendered the use of relatively thick gauge stock material and has required the use of material having a relatively high yield point in order to achieve the required spring characteristics. Thus, it is common to use fully hardened brass strip for the manufacture of some types of disengageable connectors in order that the spring which is formed as part of the connector will have adequate strength and will have the required spring properties. By way of contrast, it has been found that connectors in accordance with the instant invention can be manufactured from extremely thin stock and that the contact springs will still be adequately strong and durable to accomplish their intended function. This is a result of the fact that the springs are in reality relatively short beams which are integral at each end with the connector contact portion itself. Beams of this type can be loaded to a fairly high level without the imposition of unduly high unit stresses and, therefore, without exceeding the yield strength of the material.

Changes in construction will occur to those skilled in the art and various apparently different modifications

and embodiments may be made without departing from the scope of the invention. The matter set forth in the foregoing description and accompanying drawings is offered by way of illustration only. The actual scope of the invention is intended to be defined in the following claims when viewed in their proper perspective against the prior art.

I claim:

1. An electrical connector comprising a contact portion of generally U-shaped cross-section, means integral with one end of said U-shaped contact portion for securing said connector to a conductor, the upstanding sidewalls of said U-shaped contact portion each having an enclosed axially extending slot therein thereby to form an axially extending element which is integral at each end with its sidewall, said axially extending elements being displaced relatively towards each other, with respect to the planes of their sidewalls, the spacing between the opposed faces of said axially extending elements being slightly less than the thickness of the longitudinal marginal portions of said sidewalls of said U-shaped contact portion, and the spacing between the inner surface of each axially extending element and the outer surface of its respective sidewall being less than the spacing between the opposed surfaces of said longitudinal marginal portions of said sidewalls thereby to permit mating of said connector with a duplicate connector which is in inverted, parallel offset relationship, said longitudinally extending elements functioning as springs to hold the longitudinal marginal portions of one of the sidewalls of said duplicate connector.

2. A connector as set forth in claim 1 in which said longitudinal marginal portions of said sidewalls are reversely bent thereby to provide a double thickness of metal for reception between the longitudinally extending elements of said duplicate connector.

3. A connector as set forth in claim 2 in which said sidewalls have outwardly directed ears thereon and in which said marginal portions have divergent retaining springs extending rearwardly of said connector, said ears and said retaining springs being adapted to retain said connector in a connector block.

4. An electrical connector having a contact portion comprising a web with sidewalls extending therefrom on each longitudinal side, the longitudinal marginal portions of said sidewalls remote from said web being outwardly offset at each end of said contact portion, the intermediate sections of said offset remote sidewall portions being inwardly displaced towards each other a

distance such that the opposed inner surfaces of said inwardly displaced sections are separated by a distance slightly less than the distance separating the external surfaces of said sidewalls which are adjacent to said web whereby, said connector is adapted to receive the web and adjacent sidewall portions of a duplicate connector between said inwardly displaced sections.

5. An electrical connector having a contact portion comprising a web with sidewalls extending therefrom on each longitudinal side, said sidewalls comprising proximate and remote portions with respect to said web, said remote portions being outwardly offset at each end of said contact portion, each of said sidewalls having a longitudinally extending slot therein between said remote portion and said proximate portion, the intermediate section of each remote portion being inwardly displaced a distance such that the opposed surfaces of said inwardly displaced sections are spaced apart by a distance slightly less than the distance separating the external surfaces of said proximate portions of said sidewalls whereby, said connector is adapted to receive the web and proximate sidewall portions of a duplicate connector between said inwardly displaced remote sidewall portions.

6. An electrical connector having a contact portion comprising a web with sidewalls extending therefrom on each longitudinal side, said sidewalls comprising proximate and remote portions with respect to said web, said remote portions being outwardly offset at each end of said contact portion and having inwardly displaced intermediate sections, the opposed surfaces of said intermediate sections being spaced apart by a distance slightly less than the distance separating the external surfaces of said proximate portions whereby, said connector is adapted to receive the web and proximate sidewall portions of a duplicate connector between said inwardly displaced sections, each of said sidewalls having an inwardly extending ear at its end thereof which is opposite from its open end, said ears functioning as stops for retaining said connector in a connector block.

References Cited in the file of this patent

UNITED STATES PATENTS

2,701,350	Soreng	Feb. 1, 1955
2,711,524	Beaver	June 21, 1955
2,741,750	Barre	Apr. 10, 1956
2,762,026	Knohl	Sept. 4, 1956
2,785,387	Batcheller	Mar. 12, 1957
2,791,755	Hammell	May 7, 1957