March 19, 1963

P. MANGIAFICO ET AL

3,082,359

SOLENOID AND VALVE ASSEMBLY

Filed Jan. 26, 1960

Fig. 1

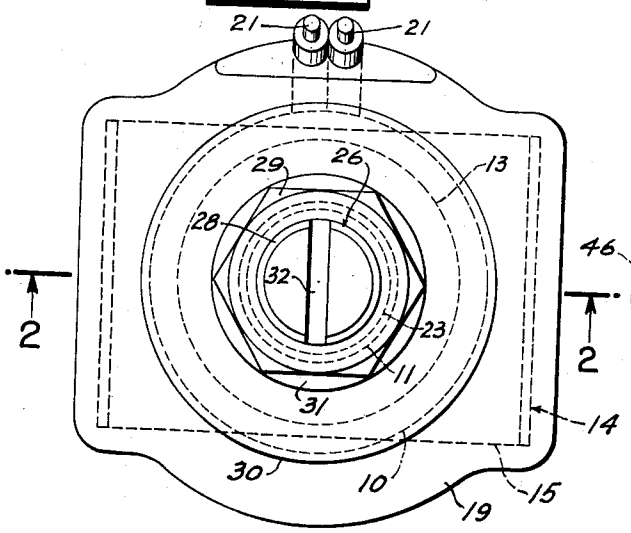

Fig. 3

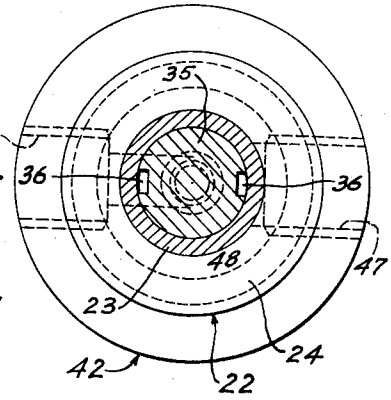

Fig. 2

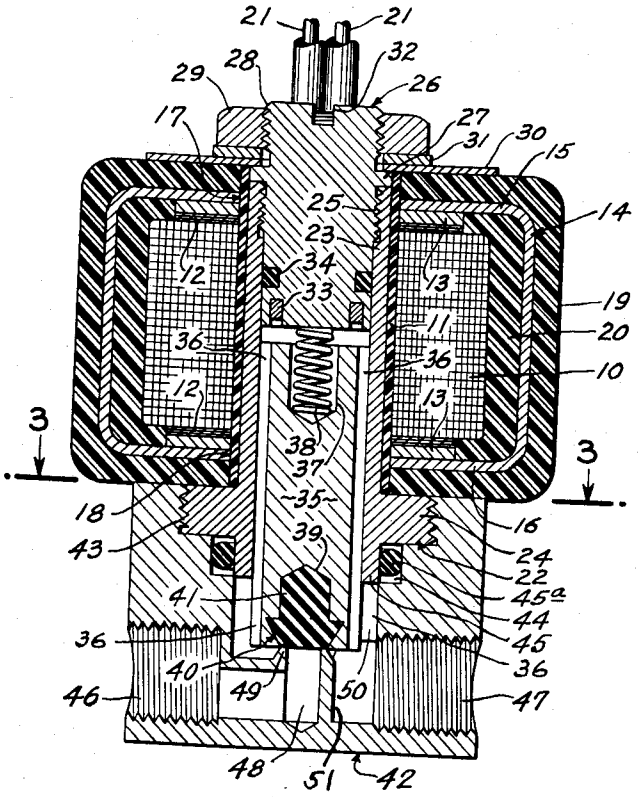

INVENTORS
PAUL MANGIAFICO
PAUL J. MANGIAFICO
EUGENE SEYBOLD

BY H. G. Manning
ATTORNEY

United States Patent Office

3,082,359

Patented Mar. 19, 1963

1

3,082,359
SOLENOID AND VALVE ASSEMBLY

Paul Mangiafico, Paul J. Mangiafico, and Eugene Seybold, New Britain, Conn., assignors to Peter Paul Electronics Company, New Britain, Conn., a firm of Connecticut

Filed Jan. 26, 1960, Ser. No. 4,721
1 Claim. (Cl. 317—191)

This invention relates to solenoid-controlled fluid flow valves, and is directed particularly to improvements in such solenoid and valve assemblies.

The principal object of the invention is to provide a solenoid and valve assembly of the above nature which will be waterproof, rustproof, spark proof, and reversible.

A more particular object of the invention is to provide a solenoid and valve assembly of the character described wherein the solenoid coil is housed in a steel-reinforced thermosetting synthetic plastic material having a high dielectric constant, and wherein the valve portion of the assembly is threadedly received at one end of the solenoid housing for easy detachability for repair and replacement.

Another object of the invention is to provide a solenoid and valve assembly of the above nature which will be simple in construction, inexpensive to manufacture, compact, readily adaptable for operation at a variety of voltages, and which will be long wearing and highly efficient in use.

Other objects, features and advantages of the invention will be apparent from the following description when read with reference to the accompanying drawings. In the drawings, wherein like reference numerals denote corresponding parts throughout the several views:

FIG. 1 is a top view of a solenoid and valve assembly embodying the invention.

FIG. 2 is a vertical cross-sectional view, taken along the line 2—2 of FIG. 1, in the direction of the arrows, and

FIG. 3 is a horizontal cross-sectional view, taken along the line 3—3 of FIG. 2, in the direction of the arrows.

Referring now in detail to the drawings, and considering first the construction of the solenoid portion of the assembly, the numeral **10** indicates a cylindrical solenoid coil wound of insulated wire on a tubular core **11** of a non-conductive material such as a synthetic plastic, the ends of which project a short distance beyond each end of said coil.

Fitted over the top end of the coil core **11** and seated against the top of the coil **10** is a paper insulating washer **12**, against the outside of which is disposed a washer-shaped steel flux plate **13** of substantially the same size. An identical insulation washer **12** and flux plate **13** are similarly fitted over the bottom end of the core **11**.

A housing and yoke element **14**, made from a wide steel band bent into rectangular shape, surrounds the solenoid coil **10** from top to bottom. The housing and yoke element **14** has top and bottom portions **15**, **16**, provided with central openings **17**, **18**, respectively which surround the ends of the tubular core **11** and fit, at their inner sides, flat against the respective top and bottom flux plates **13**, **13**.

The yoke and coil assembly described above is impregnated with a thermosetting synthetic plastic material having a high dielectric constant to provide a tough outer casing **19** integral with an interior casing portion **20** filling the voids between the solenoid coil **10** and the steel housing and yoke element **14**. Insulated electrical leads **21** connected to the terminal ends of the solenoid coil **10** extend out through the outer casing **19** for connection to an exterior energizing circuit.

Removably secured to the bottom of the sealed solenoid assembly above described is a valve assembly, comprising

2

a tubular guide member **22**, preferably of stainless steel, having a tubular sleeve portion **23** which extends up through the coil core **11**, and which is formed at its lower end with an externally threaded flange portion **24** which seats against the underside of the outer casing **19**.

The upper end of the sleeve portion **23** of the guide member **22** is internally threaded to receive an intermediate externally threaded section **25** of a cylindrical solenoid stop member **26**, screwed into said sleeve portion from the top end of the solenoid assembly. The solenoid stop member **26** is formed with an annular flange portion **27** which seats against the upper end of the sleeve portion **23** of the valve bonnet **22**. The upper end of the solenoid stop member **26** is externally threaded, as at **28**, to receive a lock nut **29**, which abuts upon a lock washer **31** resting in a circular washer-like name plate **30**, for holding the valve bonnet **22** and said stop member **26** fixed with respect to the solenoid assembly. A slot **32** is formed in the upper end of the stop member **26** to facilitate assembly with a screwdriver.

The inner end of the stop member **26**, which extends about half-way through the solenoid assembly, is formed with an annular recess, within which is journalled a copper shading ring **33** which is employed when the device is to be operated on alternating current. A rubber or neoprene O-ring **34** is fitted in a peripheral groove in the stop member **26** near the inner end thereof and serves to seal off the lower end of said stop member **26**.

Slidably fitted within the lower end of the valve bonnet member **22** is a cylindrical plunger **35** having diametrically opposed longitudinal pressure relief slots **36**. The upper end of the plunger **35** is axially bored to provide a cylindrical cavity **37**, within which is disposed one end of a plunger compression spring **38**, the other end of which seats against the lower end of the solenoid stop member **26**. The lower end of the plunger **35** is provided with a cylindrical cavity **39** having a beveled annular outer end portion **40** of increasing size from the outer end inwardly. Molded within the cavity **39** is a yieldable insert **41**, such as rubber or other composition, the outer surface of which is flush with the lower end of the plunger **35**.

Removably secured to the flange portion **24** of the guide member **22** is a cylindrical valve body **42**, the upper end of which is formed with an internally-threaded circular vertical recess **43**, threadedly received on said flange portion. The circular recess **43** of the valve body **42** is connected with a coaxial vertical annular recess **44** of reduced diameter having an interior wall in spaced relation to the outer peripheral surface of a reduced diameter outer end portion **45** of the guide member **22**. An O-ring **45*a*** is fitted within the recess **44** of the valve body **42** to seal off the interior of said valve body.

A pair of diametrically opposed internally-threaded horizontal fluid flow ports **46**, **47** are provided in the lower end of the valve body **42**. The port **46** communicates, through a transverse bore, with the interior of an upstanding tubular passageway **48**, the upper end of which terminates in an annular valve seat **49** of lesser diameter than, and coaxial with the outer end of the insert **41** in the plunger **35**.

The port **47** communicates with an annular opening **50** formed in the valve body **42** surrounding the outer end of the slidable plunger **35** and the outside of the outer end of the tubular passageway **48**. The ports **46**, **47** are separated by a vertical central wall **51**.

Operation

As illustrated in FIG. 2, the plunger spring **38** normally urges the plunger **35** downwardly so that its flush insert **41** will seal off the valve seat **49**. It will be apparent that in this position of the plunger, fluid flowing from

one of the ports **46**, **47** to the other, in either direction, will be blocked by the wall **51**.

Upon energization of the solenoid coil **10** by current from the electrical leads **21**, the plunger **35** will be drawn upwardly within the sleeve portion **23** of the guide member **22**, to a position where it will abut the inner end of the solenoid stop member **26**, thereby withdrawing the insert **41** from the valve seat **49** and allowing fluid to flow through the valve body in either direction.

While the solenoid is especially designed to be energized by alternating current, it may also be operated by direct current, upon removal of the shading ring **33**. Also by proper design of the solenoid coil **10**, it can be made to operate at any desired voltage.

While there has been described and illustrated herein one form in which the invention can conveniently be embodied in practice, it is to be understood that this form is presented by way of example only, and not in a limiting sense. In short, the invention includes all the equivalent forms and embodiments coming within the scope of the following claims.

Having thus fully described the invention, what is claimed as new and for which it is desired to secure Letters Patent is:

In a solenoid-controlled fluid flow valve, a solenoid assembly including a nonmagnetic plastic tubular core,

an annular solenoid coil surounding said core, a paramagnetic iron reinforcing and shielding yoke member extending from pole to pole about said coil and having transverse end sections provided with aligned openings through which the ends of said core extend and providing a pair of top and bottom magnetic gaps, and a casing of a plastic dielectric material surrounding and impregnating said coil and yoke assembly, said casing having a relatively large diameter in relation to its length ratio whereby the solenoid assembly will be maintained at a cool temperature, and will not overheat during use, and will operate with a constant A.C. voltage and wattage.

References Cited in the file of this patent

UNITED STATES PATENTS

2,544,209	Wolcott	Mar. 6, 1951
2,574,762	Schell	Nov. 13, 1951
2,582,351	Olson	Jan. 15, 1952
2,619,986	Goepfrich	Dec. 2, 1952
2,629,766	Vargo	Feb. 24, 1953
2,745,625	Booth	May 15, 1956
2,798,769	Whitson	July 9, 1957
2,845,585	Vincenzi	July 29, 1958
2,853,659	Herion	Sept. 23, 1958
2,951,503	Windsor	Sept. 6, 1960