Jan. 15, 1963 R. J. TREWELLA ET AL 3,073,507

FLEXIBLE BAG

Filed April 8, 1960

2 Sheets-Sheet 1

Fig. 1.

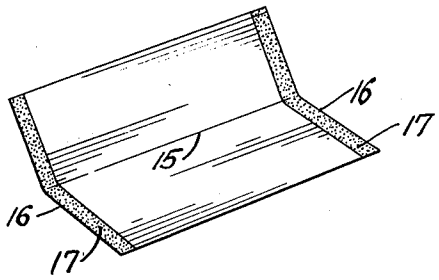

Fig. 2.

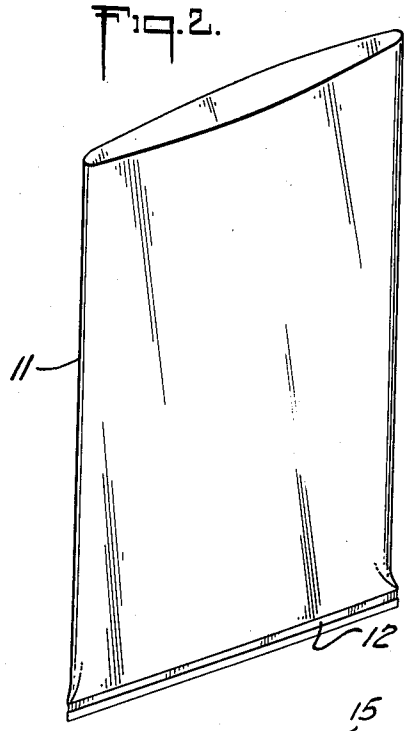

Fig. 3.

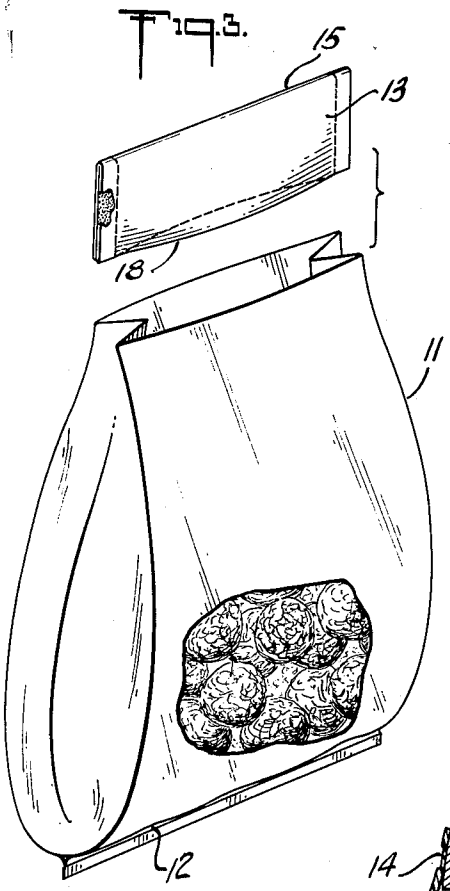

Fig. 4.

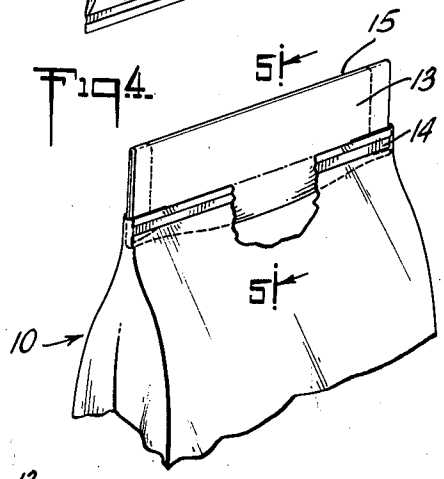

Fig. 5.

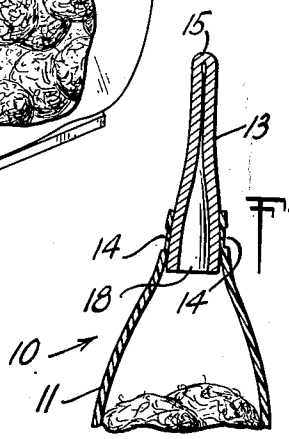

INVENTORS:
ROBERT J. TREWELLA
LAWRENCE JERZEWSKI, JR
BY
Harold L. Warner
ATTORNEY

Jan. 15, 1963 R. J. TREWELLA ET AL 3,073,507

FLEXIBLE BAG

Filed April 8, 1960 2 Sheets-Sheet 2

Fig. 6.

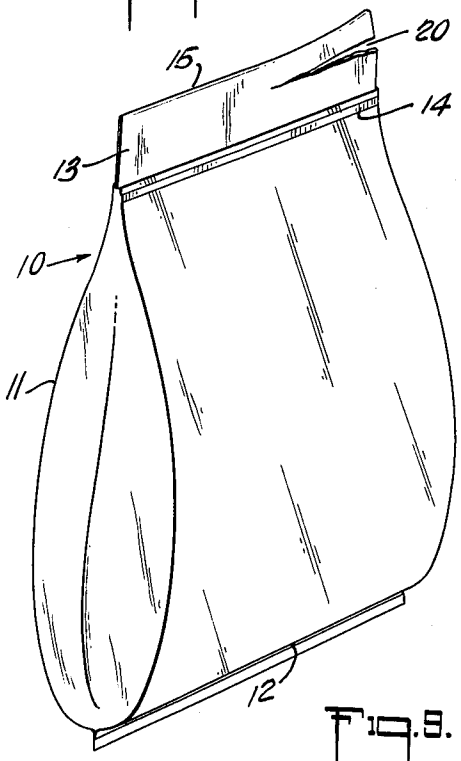

Fig. 7.

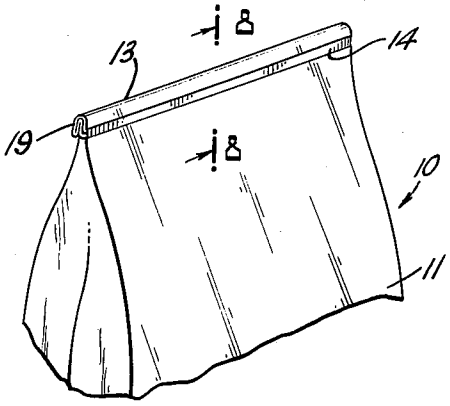

Fig. 8.

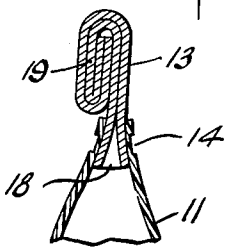

Fig. 9.

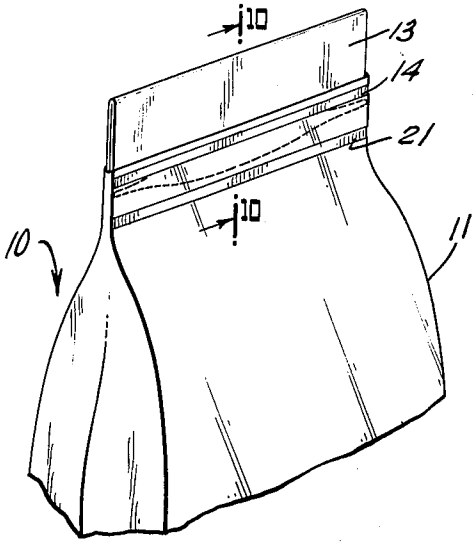

Fig. 10.

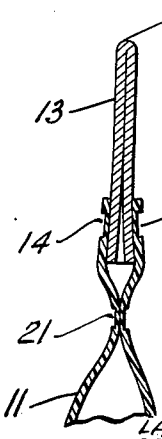

INVENTORS:
ROBERT J. TREWELLA
LAWRENCE JERZEWSKI JR.
BY Harold L. Warner
ATTORNEYS

United States Patent Office

3,073,507

Patented Jan. 15, 1963

1

3,073,507
FLEXIBLE BAG

Robert J. Trewella, Milltown, and Lawrence Jerzewski, Jr., East Millstone, N.J., assignors to Johnson & Johnson, a corporation of New Jersey

Filed Apr. 8, 1960, Ser. No. 20,995
12 Claims. (Cl. 229—62)

The present invention is directed to plastic containers and more particularly to sterilizable plastic bags which can be readily sterilized after the same have been packaged and sealed.

Plastic bags have found increasing utility for the packaging of many various types of articles. These bags have, however, been relatively unsatisfactory for packaging articles which are to be sterilized after being placed in the bag and the bag sealed because the plastic material from which the bag is formed is not sufficiently porous to permit the sterilizing gases to penetrate for sterilizing the contents.

Because of the advantages in merchandising derived from displaying the contents of a package, it has become common practice to place many articles in transparent plastic bags or containers. Besides readily displaying the merchandise, the transparent plastic bag or other container has the further advantage that the plastic sheet material from which the container is made is relatively inexpensive, is tough, giving a strong flexible package, and is readily sealed, particularly where formed of a thermoplastic sheet material. Plastic bags formed of thermoplastic films or sheets are easily prepared and articles packaged and sealed therein since thermoplastic sheet material can be purchased in the form of tubes, which may then be cut into the desired length, heat sealed at one end to form a bag, filled with the article to be packaged and the remaining open end then heat sealed to complete the sealed package. Such a package would seem to be ideally suited for the sterile packaging of surgical sponges, cotton balls, bandages and similar items which must be maintained in a sterile condition up to the time of their removal from the package prior to use. However, despite the many advantages offered by the use of thermoplastic and other flexible plastic sheet materials for packaging, considerable difficulty is encountered, because of the relatively impermeable nature of such materials, in sterilizing the contents of the bags after the bags have been sealed.

When sterilizing a packaged item, it is customary to first draw a vacuum on the package to an absolute pressure of between about 1/10 to 1/40 of an atmosphere. The package is then subjected to steam, if steam sterilization is being employed, at a pressure of about 2 atmospheres and a temperature of about 240° F. to 250° F. After being subjected to the steam for about 20 to 30 minutes, the package is brought back to atmospheric pressure. Where chemical sterilization is employed, after the initial evacuation the package is subjected to steam at about 160° F. at a pressure of about 1/3 atmosphere, after which a sterilizing gas is added and the pressure increased to about 2 atmospheres. The pressure on the package is then reduced to somewhat less than atmospheric pressure to draw off the sterilizing gas and the package then permitted to come to atmospheric pressure. Since thermoplastic and other resin films or sheets offer substantial resistance to the passage of air, when bags are made of these materials not only does the sterilizing steam or sterilizing gas not adequately penetrate the package to sterilize its contents, but the radical changes in pressure, particularly at elevated temperatures, make it extremely difficult to keep the package from rupturing at some point. This exposes the contents to contamination after the sterilizing cycle is completed.

2

Because of the relatively impervious nature of the plastic material, it has been virtually impossible to chemically or steam sterilize a sealed plastic bag without rupturing or distorting the container film during the sterilization cycle. A filtering passageway for air can be provided by placing cotton yarn or similar device into the seal where edges of the bag are brought together and sealed. However, this method is ineffective in large bags because of the large volume of air that has to go through the passage. If the filter of cotton yarn or similar material is made large enough to permit sufficient air passage, substantial difficulty is encountered in completely sealing the filter to the plastic sheet material from which the bag is formed. As a result contamination occurs through open passages which exist around the filter. A further difficulty to a string or yarn type filtering device is that it is of little value in facilitating the opening of the bag. Opening of a plastic bag, with many types of films, can be quite difficult because of the tough, tenacious character of the plastic film material.

It is an object of the present invention to make plastic bags and similar packages in which the contents, after sealing, can be readily sterilized by conventional sterilizing processes without exerting undue strain on the package. It is a further object to prepare a plastic bag having a porous insert in which the porous insert can be used for opening the bag. It is a still further object to prepare a plastic bag having a porous insert, in which the porous insert can act as a closure for the bag after the bag has once been opened. These and other objects and advantages of the present invention will become apparent from the following description taken in combination with the accompanying drawings, wherein are set forth by illustration and example certain embodiments of the invention.

Referring to the drawings,

FIG. 1 illustrates the preparation of a paper insert;

FIG. 2 is an open plastic bag without the paper insert;

FIG. 3 illustrates a plastic bag as the porous paper insert is being placed therein;

FIG. 4 illustrates the top of a sealed bag with paper insert;

FIG. 5 is a cross-sectional view taken along line 5—5 of FIG. 4;

FIG. 6 is a view of a partially opened bag;

FIG. 7 is a bag that has been reclosed after opening;

FIG. 8 is a cross-sectional view taken along line 8—8 of FIG. 7;

FIG. 9 illustrates a bag sealed after sterilization so as to be air and moisture impermeable; and

FIG. 10 is a cross-sectional view taken along line 10—10 of FIG. 9.

Referring to the drawings, the bag **10** has a body **11** formed of plastic sheet or film material. The plastic film used for making the bag may be polyethylene, Mylar or any other of the many well-known plastic film materials. The plastic should have a sufficiently high softening temperature to permit sterilization. Where the bag is formed from a tube of the plastic film as illustrated in FIG. 2, the tube is cut into predetermined lengths and sealed along one edge **12** which becomes the bottom of the bag. In the preferred practice, a thermoplastic film material is used and the seal **12** is made by heat and compression to bond the thermoplastic film together. Where the plastic material is not thermoplastic in nature, the seal is made by use of any suitable cement which will stand up under sterilizing conditions. The top of the bag contains a porous paper insert **13** sealed to the upper part of the plastic bag body as at **14**. This insert **13** in effect forms an extension of the main body **11** of the bag **10**.

The insert **13** which is in the form of an inverted pocket is prepared as illustrated in FIG. 1 from a piece of paper illustrated in FIG. 1, which paper is folded down the center along fold line **15**. The edges **16** are then secured together through adhesive **17** to form a paper pocket having an open end **18** as illustrated in FIG. 3. The paper of insert **13** should be one that is sufficiently porous to permit entrance of sterilizing gases during the sterilizing procedure but which will filter out bacteria or other contamination after the bag has once been sealed.

After the paper insert has been folded and cemented to itself along the adhesive-coated marginal areas **16**, the folded paper insert **13** is then placed in the open neck of a plastic bag, as illustrated in FIGS. 3 and 5, the open end **18** of this insert being within the bag and the fold line outside. The paper insert **13** is then bonded to the upper edge of the plastic body **11** of the bag as indicated at **14**. Where the plastic of the bag is of a thermoplastic nature this bonding is preferably done by heat and pressure to fuse the plastic to the paper. Where a non-thermoplastic material is used for making the body **11** of the bag the seal **14** may be made with any suitable adhesive. The seal **14** across the upper edge of the bag firmly adheres the paper insert to the top of the bag making the paper insert a part thereof as best illustrated in FIG. 5. In general practice the paper insert may be appreciably narrower than the open neck of the bag so that it can be readily inserted. Accordingly, where the neck of the bag extends beyond the edges of the insert, the plastic is bonded to itself rather than the paper insert.

In the preferred practice of the present invention, the plastic from which the main body of the bag is made is formed of a thermoplastic material. After the paper insert **13** has been fitted into the neck of the bag the neck is sealed to the paper through application of heat and pressure along seal line **14**. This heat and pressure not only serves to bond the thermoplastic film to the paper insert and the film to itself, but also causes the thermoplastic film to flow and fill any channels that might otherwise exist at the edge of the paper insert where it is crossed by seal line **14**. This prevents the formation of any open channels which would permit the entrance of contamination into the bag after sterilization. Although the seal can be obtained with the use of adhesives, substantially more care has to be effected to be sure that the adhesive completely fills any spaces that might exist between the insert and the plastic bag.

Where the plastic material used in preparing packages of the present invention is thermoplastic, it should have a softening temperature in excess of the temperature to be used in the sterilization process. Accordingly, where the packages are to be steam sterilized the softening temperature should preferably not be under about 260° F. For chemical sterilization films having somewhat lower softening temperatures may be employed. For example, polyethylene films have been found to be highly suitable where the polyethylene has a softening temperature in excess of about 176° F. and the package is subjected to chemical sterilization. Among other suitable films or sheet material are films or thin sheets of polyethylene terephthalate, cellulose, cellulose acetate, polystyrene, polyvinyl chloride and polyvinylidene chloride.

When it is desired to open the bag, all that is necessary is to tear off the upper end of the folded paper insert **13** as illustrated in FIG. 6 where a part of the insert **13** has been torn at **20**. The bag is thus readily opened without the necessity of tearing through tough film material, which is frequently very difficult. Also, the paper can be torn straight across relatively easily without ruining the bag itself. If desired, a tear string, not shown, may be inserted or the paper weakened along a tear line to give a straight tear if desired.

Another advantage of the present bag over conventional plastic bags is that should it be desired to later close the bag, the bag can be readily closed by folding over the paper of insert **13** as illustrated at **19** in FIGS. 7 and 8, much in the manner that conventional paper bags are closed. Since paper is creasable and tends to remain in a folded state the paper insert **13** will remain in its bent or folded state as illustrated in FIGS. 7 and 8, to keep the bag temporarily closed. This is not possible with plastic which cannot be creased and held in its creased state as can paper.

The large porous paper insert adds a large porous area to the bag which permits ready passage of air in and out of the bag during sterilization. The contents of the bag can accordingly be readily sterilized without danger of rupture regardless of the size of the bag since the larger the bag the larger the mouth of the bag and the paper insert used.

The paper from which insert **13** is prepared should also be sufficiently strong to resist tearing both during sterilization and during shipping and handling. Otherwise the same may be torn with the result that the contents of the package will become contaminated. Papers having a wet strength not appreciably less than 1.4 pounds per inch width and a dry strength of not less than 8.5 pounds per inch are found to be sufficiently strong for use in the present invention. The paper used should be impervious to air-borne bacteria and for this reason papers more porous than those having a porosity rating of about 45 seconds are generally unsatisfactory. The preferred papers have a porosity, as shown by the Gurley-Hill S-P-S Tester, of about 65 seconds to 180 seconds. This method of porosity testing is the T.A.P.P.I. Standard T.460—*m*49 and is the time for passage of 100 ml. of air through one square inch of paper. The porosity rating of any paper in the above units can be obtained from most paper manufacturers for the papers they sell.

With appreciably lower porosities, i.e., with time factors greater than 180 seconds, it is found difficult to completely sterilize the package contents with conventional steam or chemical sterilization methods, the paper offering too much resistance to flow of the sterilizing gas. Also, there is some tendency for the package to rupture during the sterilizing cycle. Where the paper has an appreciably greater porosity as shown by a test time reading of appreciably less than 45 seconds, there is too much danger of air-borne bacteria passing through the paper and contaminating the contents of the package.

Although papers having a pore size sufficiently large to give a reading of 45 seconds have been found to satisfactorily filter out air-borne bacteria, there is always the possibility that the paper is not of good stock and uniform quality. Accordingly, it is the safest practice to check any new stock. Also, papers used should be of a high grade and uniform quality to avoid the possible inclusion of inferior sheets of unsatisfactory pore size. The ability of a paper to act as a bacterial filter is tested in the following manner. The sample paper is fabricated into rectangular envelopes and a gauze pad is placed into each envelope. The edges of each envelope are securely sealed with adhesive or cellophane tape and the packages are then steam sterilized according to U.S.P. procedures, Sterilization Process C. Upon removal the packages are exposed to air-borne bacterial penetration normally encountered in various storage conditions. After exposure for several weeks the contents of each envelope are tested for sterility as outlined in U.S.P., Sterility Tests for Liquids and Solids, Sterility Test for Purified Cotton, Gauze, and Surgical Dressings. Papers allowing no contamination are acceptable bacterial filters.

It may in some instances be desirable to completely seal the bag after its contents have been sterilized to make the interior of the bag essentially impermeable to the entrance or exit of any gas or moisture. Where this is desired this can be readily done after sterilizing when the

bag is formed of a thermoplastic film material, by again sealing the bag below the paper insert along a seal line 21 as illustrated in FIGS. 9 and 10. This seal is readily obtained through the application of heat and pressure sufficient to fuse the plastic film together. In such instances the paper insert would, of course, not aid in opening the plastic bag. The paper insert would, however, permit sealing of the bag with contents prior to sterilization so that there could be no possible contamination as might otherwise result from handling and packaging. If a second seal, as illustrated in FIGS. 9 and 10, is to be made immediately after sterilization so that the paper insert 13 is no longer needed to protect the package contents, the nature of the paper insert is not as critical, and less expensive papers can be employed.

Although the containers have been described as being particularly useful for the packaging of sterile articles they are not necessarily limited to this use and can be used for the packaging of other items.

Particular embodiments of the invention have been used to illustrate the same. The invention, however, is not limited to these specific embodiments. In view of the foregoing disclosure, variations or modifications thereof will be apparent and it is intended to include within the invenion all such variations and modifications except as do not come within the scope of the appended claims.

Having thus described our invention, we claim:

1. A flexible bag capable of having its contents gas sterilized after having been sealed therein comprising a substantially air imprevious lower body portion formed of flexible plastic film substantially impervious to sterilizing gases, and an upper top portion pervious to sterilizing gases formed of porous paper, said upper top portion being in the form of an inverted pocket and sealed to said lower body portion to form a composite container in which the upper part of the sides of the container is formed of said porous paper and the lower part of the sides of the container is formed of said flexible plastic film.

2. A flexible bag of claim 1 in which the lower open portion of said inverted paper pocket is contained within the plastic film body portion of the bag.

3. A flexible bag of claim 2 in which said plastic film body portion is formed of a thermoplastic film and in which said film and paper pocket are joined through fusion of said thermoplastic film to said paper.

4. A flexible sealed package containing articles sealed therein comprising a bag formed of flexible plastic film material, a paper insert in the form of an inverted pouch having an open end and a closed end, the open end of said pouch being within the upper portion of said plastic film bag and the closed end of said paper pouch extending from said plastic bag, said plastic bag being sealed along its upper edge to the inverted portion of said paper pouch, the lower portion of the sides of said flexible package being formed of the flexible film of said bag and the upper portion of the sides of said flexible package being formed of the paper of said insert.

5. A package of claim 4 in which the articles contained therein are sterile.

6. A package of claim 4 in which said flexible film is a thermoplastic film.

7. A package of claim 6 in which the upper part of said bag of flexible thermoplastic film is sealed below said paper insert.

8. A package of claim 7 which is substantially air and moisture impervious.

9. A package of claim 8 in which the articles contained therein are sterile.

10. A package of claim 4 in which said paper insert is formed of a rectangular piece of paper folded on itself and having the facing side edges cemented to each other.

11. A package of claim 10 in which the flexible film is a thermoplastic film and in which the thermoplastic film is fused to said paper insert.

12. A package of claim 11 in which the paper insert can be readily torn to open said package.

References Cited in the file of this patent

UNITED STATES PATENTS

704,758	Riley	July 15, 1902
2,344,640	Rogers	Mar. 21, 1944
2,463,992	Moore	Mar. 8, 1949
2,675,957	Zimmerman	Apr. 20, 1954
2,765,974	Phipps et al.	Oct. 9, 1956
2,947,415	Garth	Aug. 2, 1960