Jan. 15, 1963 W. R. JULIN 3,072,927

SECTIONAL SHEET METAL BED CONSTRUCTION

Filed March 30, 1959

FIG. 1.

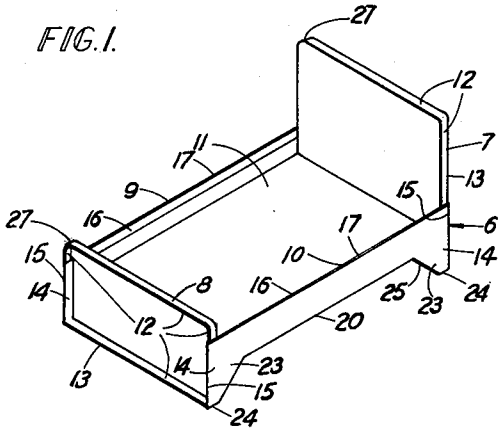

FIG. 2.

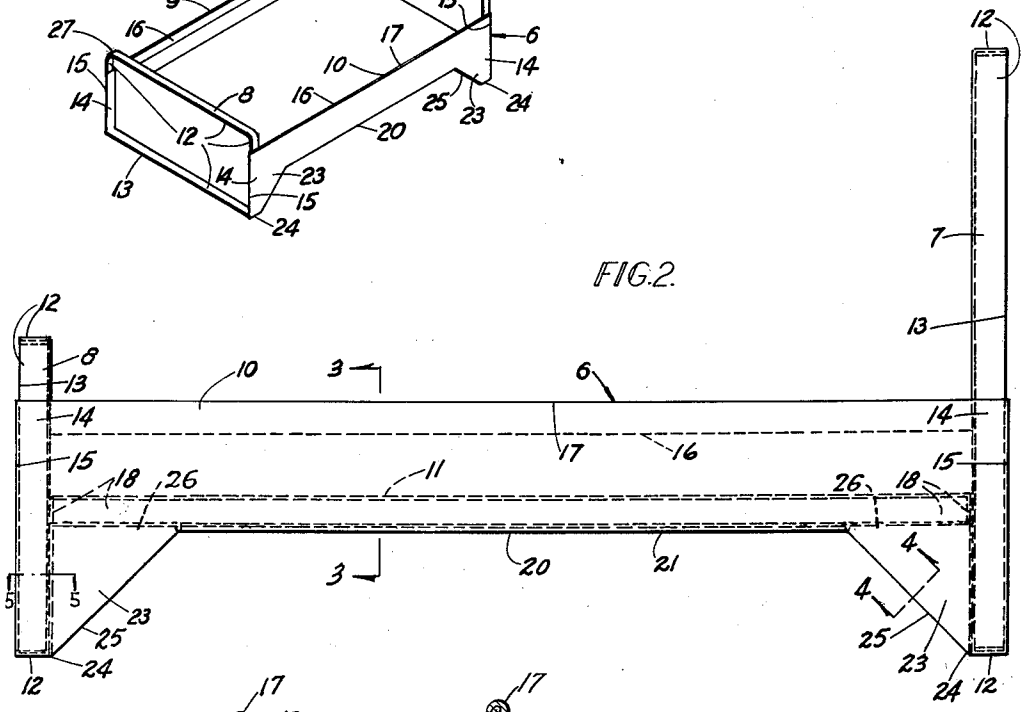

FIG. 3.

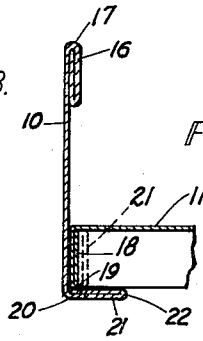

FIG. 6.

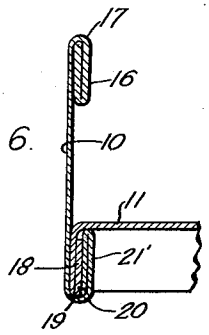

FIG. 4.

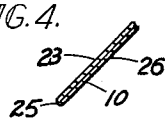

FIG. 5.

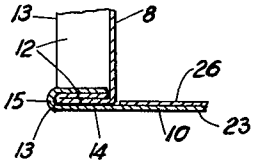

INVENTOR.
WESLEY R. JULIN
BY
Andrew F. Wintercorn
ATTORNEY

United States Patent Office

3,072,927

Patented Jan. 15, 1963

1

3,072,927
SECTIONAL SHEET METAL BED CONSTRUCTION

Wesley R. Julin, Belvidere, Ill.
(324 S. 7th St., DeKalb, Ill.)

Filed Mar. 30, 1959, Ser. No. 802,932
3 Claims. (Cl. 5—131)

This invention relates to a sectional sheet metal bed construction, and, while more particularly designed and intended for use in a child's doll bed or similar toy article, could be employed in a baby's bed or even a youth's size bed, and possibly a full size bed.

The principal object is to reduce the construction to a number of substantially flat pieces, all of simple and economical construction, which can be stacked together in a small space for easy, low cost packaging and shipping, and convenient storage when not in use, but, more importantly, easiest possible interfitting, so that a child can put the article together or take it apart without any difficulty, the bed when set up being exceptionally sturdy, rigid, and durable.

Another object is the elimination, so far as possible, of any sharp corners and edges, so as to reduce likelihood of any part scratching or cutting a chlid's hands in the assembling or disassembling of the bed and in playing with it, the various sheet metal parts being furthermore formed so that in accomplishing the aforementioned objective they are also reinforced and rigidified, and are therefore much less likely to get bent out of shape with rough handling.

The invention is illustrated in the accompanying drawing, in which—

FIG. 1 is a perspective view of the bed of my invention, on a smaller scale;

FIG. 2 is a side view of the bed, about one-half actual size;

FIGS. 3, 4 and 5 are sectional details on the correspondingly numbered lines of FIG. 2, showing the parts approximately full size, and

FIG. 6 is a view similar to FIG. 3 showing a modified or alternative construction.

The same reference numerals are applied to corresponding parts throughout these views.

Referring to the drawing, the reference numeral **6** designates the bed made in accordance with my invention generally, the same being of sectional sheet metal construction and comprising a head-end part **7**, foot-end part **8**, two side-rail parts **9** and **10**, and a bottom part **11**, all specially constructed and arranged to be interfitted as illustrated. The head and foot-end parts **7** and **8** are of rectangular dished form, the four flanged edges **12** being all folded to double thickness to make the edges **13** nicely rounded and conceal the raw edges, besides giving added strength and rigidity. The side rail parts **9** and **10** have the ends **14** bent to channel form to make the end edges **15** nicely rounded while also defining inwardly opening channels at opposite ends for reception of the outwardly extending flanged side portions of the head and foot-end parts **7** and **8**, as best shown in FIG. 5. The upper edge portions **16** of the side rails between the channelled ends **14** are folded inwardly to triple thickness, as seen in FIG. 3, to provide nicely rounded top edges **17** and also give the slide rails added stiffness and strength. The bottom part **11**, which is of rectangular dished form, like the head and foot-end parts, has its downwardly projecting flanges on the four sides thereof all folded to double thickness, as seen at **18** in FIG. 3, to make the edges **19** nicely rounded and conceal the raw edges and give the bottom added strength and rigidity. The bottom edges **20** of the side rails **9** and **10** between the supporting legs **23**—**24** are also nicely rounded, these edges being defined by inwardly bent horizontal flanges **21**, as seen in

2

FIG. 3, which are folded to double thickness, as shown, to make their inner edges **22** also nicely rounded, besides giving added strength and rigidity to the side rails. It is on top of these double thickness flanges **21** that the bottom part **11** rests on its double thickness flanges **18**, as shown in FIG. 3, said bottom part serving also to hold the head and foot-end parts **7** and **8** apart so that neither of these two parts can be disconnected from the side rails until the bottom part **11** is removed. If preferred, the inwardly directed flanges **21** can, as shown at **21'** in FIG. 6, be bent upwardly to define open-top channels closely receiving the downwardly projecting flanges **18** on the bottom part **11**, whereby to make for still greater strength and rigidity in the assembled bed.

The flanged edge portions **12** on the bottom of the head and foot-end parts **7** and **8** provide broad supporting feet so that the bed will not be apt to scratch a floor or other surface on which it rests.

The triangular web portions **23** on opposite ends of the side rails **9** and **10** define supporting legs **24** for said side rails to support the bottom part **11** at the desired elevation, and these web portions also have rounded edges **25** as a result of the folding of triangular portions **26** inwardly behind the webs **23**. This also makes for added strength and rigidity in the leg portions of the side rails.

The top corners **27** on the head and foot-end parts **7** and **8** are preferably also rounded for better appearance and reduced likelihood of injury to the child playing with the bed.

It is clear, therefore, that despite the use of sheet metal for economy and durability, all exposed edges are nicely rounded to avoid scratching or cutting the hands of a child playing with the bed, and, because of the novel way in which these rounded edges are obtained, the bed is given much added strength and rigidity. If a few simple instructions accompany the bed when it is sold packaged in knocked down form, a child can easily put the parts together. This knock-down feature not only enables low cost, compact packaging of the article but adds greatly to its sales appeal, because a child learns something in the performance of the assembling and disassembling operations, and derives a certain sense of satisfaction in the performance of these operations.

It is believed the foregoing description conveys a good understanding of the objects and advantages of my invention. The appended claims have been drawn to cover all legitimate modifications and adaptations.

I claim:

1. In a sectional bed construction, a head-end section, a foot-end section, said sections having their lower ends in a common horizontal plane for support on a horizontal surface and each of said sections having flanges on the lateral edges thereof in substantially vertical planes, the flanges on said head-end section projecting away from the foot-end, the flanges on said foot-end section projecting away from the head-end, two side rail sections disposed on opposite sides of said head-end and foot-end sections in upwardly spaced relation to the lower ends thereof and having channel shaped end portions in substantially vertical planes, said channels on each side rail opening toward each other on the inner side of the side rail and interlockingly receiving the flanges on one side of said head-end and foot-end sections, said side rail sections having integral downwardly extending leg portions on opposite ends thereof for support against vertical displacement relative to said head-end and foot-end sections by engagement with the same horizontal surface as the lower ends of said end sections, the channels on the ends of said side rail sections being extended downwardly on said leg portions and interlocked with the flanges on the lower ends of said end sections, said side rail sections also having inwardly extending flanges longitudinally of the

bottom thereof, and a rectangular bed bottom section supported horizontally on said inwardly extending flanges on said side rail sections while abutting said head-end and foot-end sections substantially the full width of its opposite ends and holding said end sections against disconnection from the ends of said side rail sections and square with the bed bottom section.

2. A sectional bed construction as set forth in claim 1 wherein said inwardly projecting flanges on said side rail sections are bent upwardly to channel shape with the channels opening upwardly, said bed bottom section having downwardly projecting flanges on the opposite sides thereof interlockingly received in said channels.

3. A sectional sheet metal bed construction as set forth in claim 1 wherein there are triangular web portions on opposite ends of said side rail sections integral with and bracing said leg portions relative to the ends of said side rail sections, the sheet metal of said side rail sections defining said triangular web portions being folded to double thickness to give rounded exposed edges and conceal the raw edges of the sheet metal besides lending added strength and rigidity to said leg portions.

References Cited in the file of this patent

UNITED STATES PATENTS

1,128,162	McCue	Feb. 9, 1915
1,352,002	Jones	Sept. 7, 1920
1,531,099	Hosford	Mar. 24, 1925
2,132,131	Schilling	Oct. 4, 1938
2,309,323	Lear	Jan. 26, 1943
2,869,953	Miller et al.	Jan. 20, 1959
2,943,780	Bolding	July 5, 1960