Nov. 20, 1962 A. P. SPEISER ETAL 3,065,366

PULSE GENERATOR

Filed May 21, 1959

FIG. 1

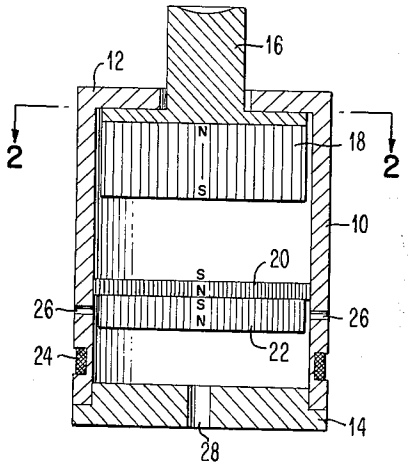

FIG. 3

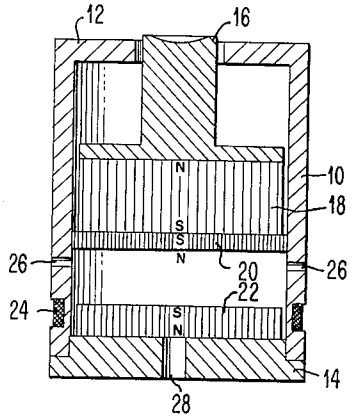

FIG. 2

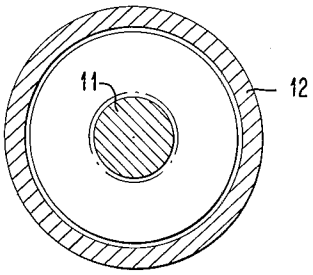

FIG. 4

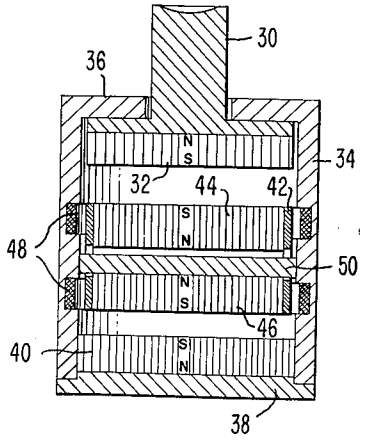

INVENTORS
AMBROS P. SPEISER
HEINRICH STEINMANN

BY William V. Schelberg
AGENT

United States Patent Office

3,065,366

Patented Nov. 20, 1962

1

3,065,366
PULSE GENERATOR

Ambros P. Speiser, Oberrieden, Zurich, and Heinrich Steinmann, Belp, Berne, Switzerland, assignors to International Business Machines Corporation, New York, N.Y., a corporation of New York

Filed May 21, 1959, Ser. No. 814,720
Claims priority, application Switzerland July 2, 1958
11 Claims. (Cl. 310—15)

This invention relates to electrical pulse generators and more particularly to a mechanically operated pulse generator which may be employed for control of various electrical equipment.

The prior art is replete with pulse generators which have electrical contacts. Some of the main disadvantages of these prior art pulse generators are a non-uniform pulse form due to the difficulty in maintaining a constant contact resistance during its period of use, the necessity of an external current source and, more particularly, the ever present detrimental effects of mechanical wear. Furthermore, the supports for such contacts are usually of a resilient nature and produce a so-called "bouncing" effect of the contacts, which is a vibration of the contacts during the closing operation, causing a very short opening thereof immediately after its closure producing a pulse form of oscillatory shape.

It has been found that the above disadvantages are eliminated by constructing a pulse generator in accordance with this invention which comprises a coil provided with output terminals and a magnet, which are movable with respect to each other in order to vary the magnetic flux through the coil to thereby induce an output signal at the output terminals, and further comprises a body which is in a fixed position with regard to the coil to which the magnet is attached in its rest position, due to a magnetic attraction and means to exert a force upon the magnet which is in a direction away from the body and larger than the magnetic attraction.

Accordingly, an object of this invention is to provide a pulse generator which produces substantially uniform pulses.

Another object of this invention is to provide a pulse generator in which there is no bouncing effect.

Still another object of this invention is to provide a mechanically operated pulse generator which produces pulses of a shape which, within wide limits, is independent of the speed at which the mechanical operation takes place.

Yet a further object of this invention is to provide a pulse generator which does not require an external current source.

A further object of this invention is to provide a pulse generator in which mechanical wear is minimized.

Another object of this invention is to provide a pulse generator capable of producing a plurality of pulses simultaneously.

The foregoing and other objects, features and advantages of the invention will be apparent from the following more particular description of preferred embodiments of the invention, as illustrated in the accompanying drawings.

In the drawings:

FIG. 1 is a sectional view of one embodiment of this invention which illustrates a pulse generator in its normally rest position.

FIG. 2 is a sectional view taken along the lines 2—2 of the FIG. 1.

FIG. 3 is a sectional side view of the embodiment of FIG. 1 showing the pulse generator in its operative position.

2

FIG. 4 is a sectional side view of another embodiment of this invention illustrating its normally rest position.

In each of the FIGURES 1, 2 and 3, a cylinder 10 is shown which is closed with an end plate 12 at one end, which may be integral with the cylinder 10 as shown, and a cover plate 14 at the other end. There is provided with the stationary cylinder 10 an axially movable operating member 16, which serves as a push button. Secured to the push button 16 is a piston shaped permanent magnet 18 which is movable in an axial direction. There is provided within the cylinder 10 a permanent magnet 20 which is fixed to the inner surface of the cylinder, and a permanent magnet 22, also movable in the axial direction, which is positioned between the magnet 20 and the cover plate 14. A coil 24 is fixed to the cylinder 10 and electrical pulses are generated at terminals thereof, not shown. Openings which allow free movement of air within the structure are designated by the reference numerals 26 and 28.

The permanent magnet 20, which is fixed to the cylinder 10, is magnetized so that it attracts the movable permanent magnet 22 and at the same time repels the permanent magnet 18 affixed to the operating member 16. In the rest position, the movable magnet 22 is, therefore, attracted to and in contact with the fixed magnet 20 and the operating member 16 is positioned at the upper end of the cylinder 10. If a mechanical pressure is now exerted in the downward direction upon the push button 16, it moves toward the magnets 20 and 22 to provide a repelling force upon the movable magnet 22 by means of the magnet 18, which becomes greater than the attracting force exerted by the relatively weak magnet 20, so that the magnet 22 is thrown toward the cover plate 14 and thus induces an electrical voltage in the coil 24. The movement of the magnet 22 takes place when the critical distance of the magnet 18 from the magnet 20 is reached and is practically independent of the speed with which the push button 16 is operated. The operated position of the parts are shown in the FIG. 3. Upon discontinuation of the mechanical pressure upon the push button 16, the rest position of the parts as shown in the FIG. 1, is restored in an opposite sequence.

Another embodiment of this invention is shown in the FIG. 4 wherein an operating push button 30 is shown secured to a permanent magnet 32 which is arranged axially movable within a cylinder 34. The cylinder 34 is closed at either end by an end plate 36 and a cover plate 38, respectively. A permanent magnet 40 is fastened to the cover plate 38 or to the lower end of cylinder 34. There is also provided an axially movable cylinder 42 within the cylinder 34 to which are secured two permanent magnets 44 and 46, manifesting a fixed position with respect to each other. A pair of coils 48 are also fixed to the cylinder 34 which coils may be connected with each other or may be separate.

The movements of the cylinder 42 are restricted by a body 50 which is made of soft iron and fixed to the cylinder 34. The cylinder 42 is movable between the two end positions in which the magnet 44 and the magnet 46 respectively, are in contact with the body 50. All the permanent magnets 32, 40, 44 and 46 are magnetized in an axial direction so that adjacent ones repel each other. The distance between the magnets 40 and 46 is similar to the distance between the magnets 32 and 44, so that the movable cylinder 42 in its rest position, is such that the magnet 46 is in contact with the plate 50 made of soft iron. In the rest position, it may be seen that the operating member 30 and the attached magnet 32 are at the upper end of the cylinder 34.

As the push button 30 is pushed downward, it moves towards the magnet 44 and, at a certain distance therefrom,

the repelling influence is so great that the magnet 46 becomes detached from the soft iron plate 50 while simultaneously the magnet 44 is thrown toward the iron plate 50 and stays attached thereto. The iron plate 50 always exerts the greater attracting force upon that one of the magnets 44 and 46 held by the cylinder 42 which is nearer to the iron plate 50. The movement of the magnets 44—46 induces electrical voltages in the coils 48 and thus provides electrical output pulses. Upon release of the push button 30, the device returns to its rest position in an opposite sequence. It should be noted that if the coils 48 are not connected together, two pulses are produced, while if connected in series, a single pulse of a voltage which is equal to the sum of the individual coil voltage is produced.

While there have been shown and described with reference to preferred embodiments thereof, it will be understood by those skilled in the art that various changes in the form and details of the devices may be made therein without departing from the spirit and scope of the invention.

What is claimed is:

1. In a pulse generator, an output winding, a first magnet, said winding and said first magnet being movable with respect to one another whereby a flux change is experienced in said winding to generate an electrical pulse therein, first means comprising a second magnet fixed with respect to said winding for magnetically biasing said magnet in a datum position, and actuating means for overcoming said first means to cause motion of said magnet with respect to said winding when actuated.

2. In a pulse generator, an output winding, a first magnet, said winding and said first magnet being movable with respect to one another whereby a flux change is experienced in said winding to generate an electrical pulse therein, reset means fixed with respect to said winding adapted to magnetically bias said first magnet in a datum position, and actuating means including a second magnet adapted to overcome said reset means and cause motion of said first magnet with respect to said winding and generate a given pulse in said winding independent of the speed at which said second magnet is actuated.

3. In a mechanically actuated pulse generator, a winding, a first magnet, said winding and said first magnet being movable with respect to one another whereby a flux change is experienced in said winding to generate an electrical pulse therein, reset means comprising a second magnet fixed with respect to said winding and adapted to magnetically bias said first magnet in a datum position, and actuating means including a third magnet adapted, when actuated, to overcome said reset means and cause movement of said first magnet with respect to said winding whereby a given pulse is generated in said winding of one polarity and when released to cause a given pulse of opposite polarity to be energized in said winding by action of said reset means, independent of the speed at which said third magnet is actuated or released.

4. The pulse generator of claim 3, wherein said first and third magnets are arranged within a cylinder and are axially movable therein.

5. The pulse generator of claim 4, wherein said second magnet is positioned intermediate said first and third magnets.

6. A mechanically actuated pulse generator comprising in combination, a cylindrical container having an upper and a lower portion, a winding peripherally wound about the lower portion of said container, a first piston-shaped magnet within the lower portion of said container and axially movable with respect to said winding between a first and a second limiting position whereby a flux change is experienced in said winding to generate an electrical pulse therein, an auxiliary magnet integrally connected to the inner walls of said container intermediate the upper and lower portions thereof and adapted to magnetically bias the first magnet to said first limiting position, and actuating means including a second piston-shaped magnet arranged within the upper portion of said container and axially movable therein, said second magnet when actuated being adapted to overcome the bias of said auxiliary magnet and cause said first magnet to move to the second limiting position whereby a given electrical pulse is generated in said winding independent of the speed at which said second magnet is actuated.

7. A mechanically actuated pulse generator comprising in combination, a cylindrical container having an upper and a lower portion, a covering for each end comprising an apertured plate, a winding radially mounted about the lower portion of said container, a first piston-shaped magnet axially movable between an upper extremity of said lower portion as a first limiting position of travel and the plate on the lower end of said container as a second limiting position of travel whereby a flux change is experienced in said winding by such movement to generate an electrical pulse therein, means fixed with respect to said winding for biasing said first magnet in one of said limiting positions of travel, and actuating means including a second piston-shaped magnet axially movable between the plate on the upper end of said container and a lower extremity of said upper portion adapted to overcome the bias on said first magnet when actuated to move toward said first magnet to cause said first magnet to move from said one to another of said limiting positions of travel whereby a predetermined pulse is generated in said winding independent of the speed at which said second magnet is actuated.

8. The generator of claim 7 wherein said means for biasing said first magnet in one of said limiting positions of travel is an auxiliary magnet integrally positioned in said container intermediate and separating the upper and lower portions thereof.

9. The generator of claim 7, wherein said means for biasing said first magnet in one of said limiting positions of travel is an auxiliary magnet integrally positioned in said container and abutting the apertured plate on the lower end of said container.

10. The generator of claim 9 including a second winding radially mounted about said container in the upper portion thereof and a third piston-shaped magnet axially movable in the upper portion of said container and with respect to said second winding to generate an electrical pulse therein, said third magnet arranged intermediate said first and third magnets wherein actuation of said actuating means causes movement of both said first and third magnets with respect to said first and second windings to generate a predetermined electrical pulse in each of said first and second windings.

11. The generator of claim 7 wherein said actuating means comprises a button slidably mounted through the aperture in the cover on the upper end of said container and is integrally connected to said second magnet.

References Cited in the file of this patent

UNITED STATES PATENTS

2,714,673 Buchmann ---------- Aug. 2, 1955

FOREIGN PATENTS

772,544 Great Britain ---------- Apr. 17, 1957