April 3, 1962 N. NELSSON 3,027,605

HOLLOW WALL CONSTRUCTION

Filed April 29, 1958 2 Sheets-Sheet 1

Fig. 1.

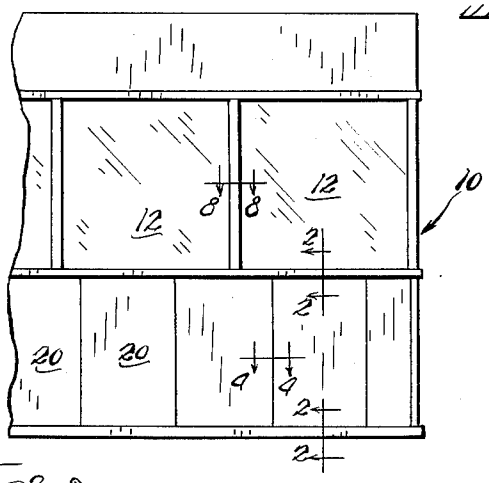

Fig. 6.

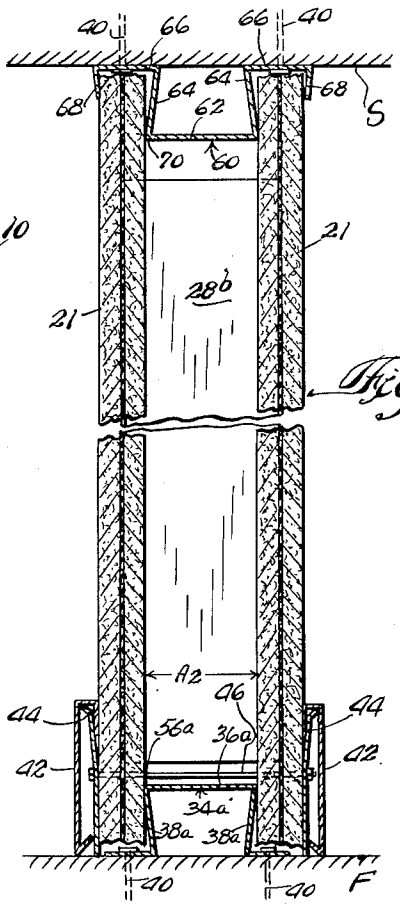

Fig. 7.

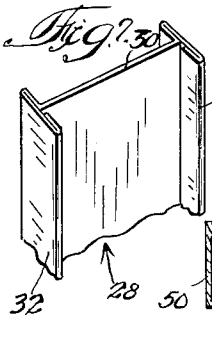

Fig. 2.

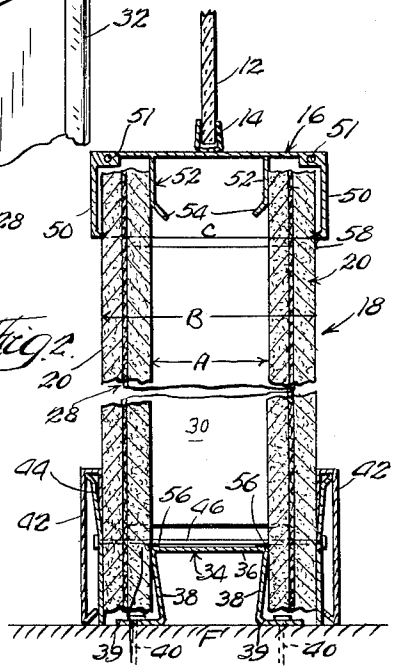

Fig. 5.

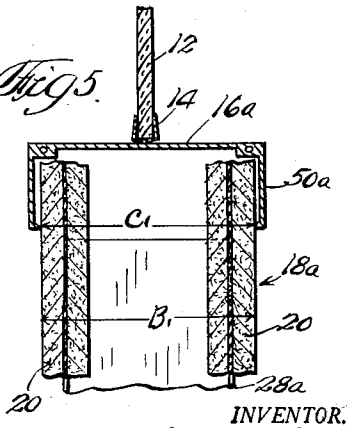

Fig. 4.

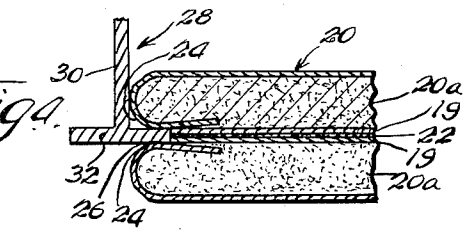

INVENTOR.
Nels Nelsson.

BY.
Olson, Meckelborg & Van Holst.
Pendleton & Newman. Attys.

April 3, 1962 N. NELSSON 3,027,605

HOLLOW WALL CONSTRUCTION

Filed April 29, 1958 2 Sheets-Sheet 2

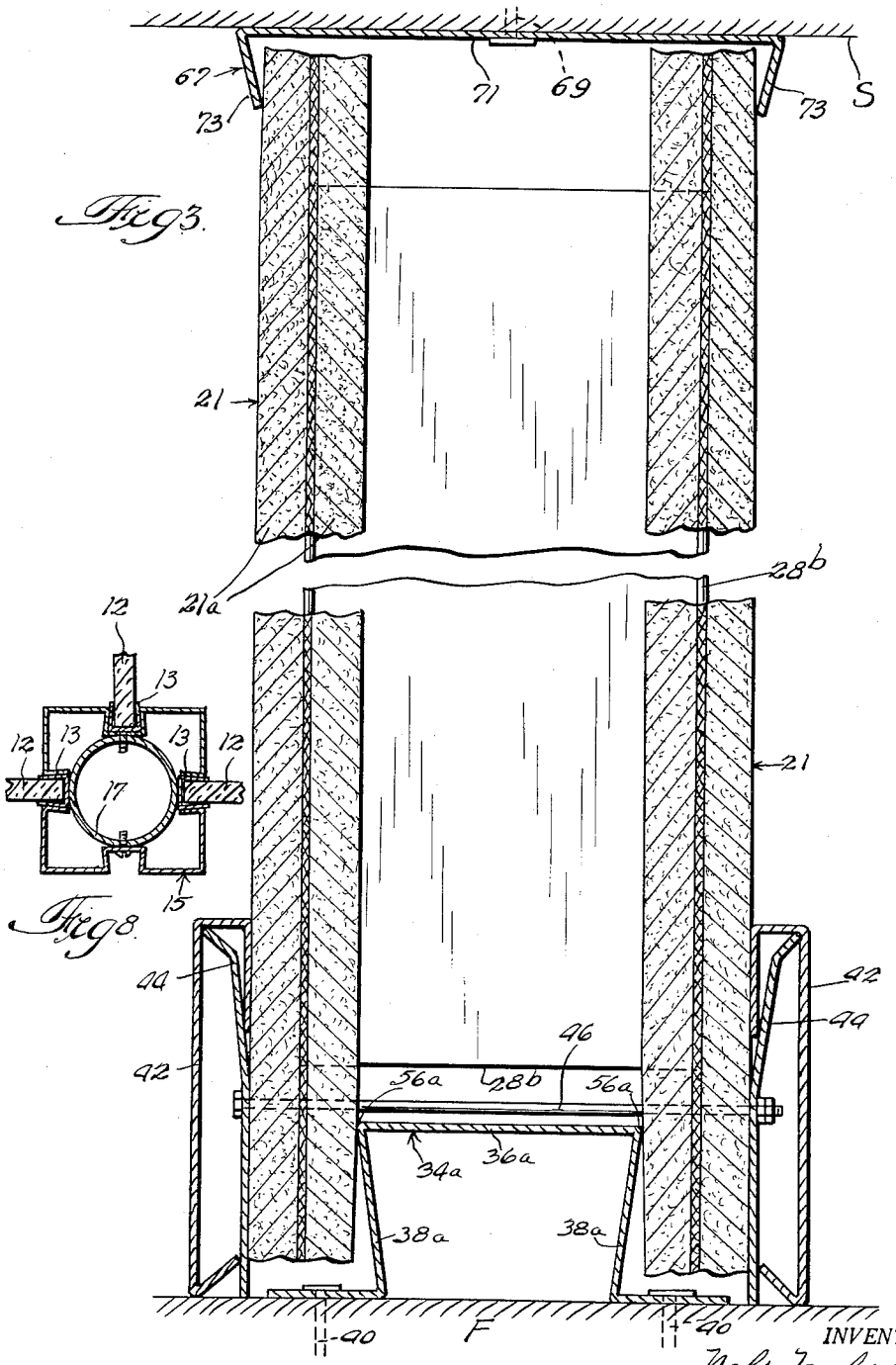

INVENTOR.
Nels Nelsson.
BY.
Olson Mecklenburger von Holst.
Pendleton & Neuman. Attys.

United States Patent Office

3,027,605

Patented Apr. 3, 1962

1

3,027,605
HOLLOW WALL CONSTRUCTION

Nels Nelsson, Chicago, Ill., assignor to United States Gypsum Company, Chicago, Ill., a corporation of Illinois

Filed Apr. 29, 1958, Ser. No. 731,695
2 Claims. (Cl. 20—4)

This invention relates to an improved hollow wall construction and more particularly relates to a hollow wall construction which is constantly maintained in a sturdy condition of assembly.

The erection of hollow wall partitions has previously been a costly and time-consuming operation. The construction of such walls usually entailed the fastening of wallboards to supporting studs by driving nails or other similar fastening means into the studs. Such a method of erection resulted in marring the appearance of the partition faces and required expensive finishing operations for purposes of covering the depressions left by the securing means to provide smooth surfaces. It is apparent that in large housing projects in particular a simple and sturdy partition construction in which such finishing operations may be eliminated would be of great value. Also, in large office buildings or the like a partition construction which may be readily erected and disassembled readily and easily is in great demand.

It is an object of this invention to dispense with the need for securing means for purposes of securing wallboards or the like to supporting stud members.

It is another object of this invention, therefore, to provide a wall or partition construction requiring no finishing operations occasioned by exposed fastening means employed for securing wallboards to supporting studs.

It is a further object of this invention to provide a partition construction employing wallboards which is not only capable of being readily erected but in addition may be readily demountable.

It is another object of this invention to provide a hollow wall or partition construction which is simple in design employing a minimum number of parts and yet so sturdy in construction as to remain rattle-free indefinitely.

Further and additional objects will apear from the following description, accompanying drawings and appended claims.

In accordance with one embodiment of this invention a hollow wall construction is provided which comprises a plurality of wallboard units arranged in abutting edge-to-edge coplanar relation to form parallel, spaced courses of wallboard units which define a hollow wall-type partition.

Each abutting edge of a wallboard unit is provided with an elongate recess or pocket running the length of such edge. Spaced stud members of general H-shaped cross-sectional configuration are interposed between the wallboard courses and retain such courses in spaced substantially parallel relation. Each of the studs interposed between the wallboard courses has a length substantially less than the height of the wallboards engaged thereby. Each stud comprises a central web portion interconnecting two transversely disposed flange sections. The opposed segments of each flange engage the corresponding wallboard slots and effect interlocking between each H-stud flange segment and the wallboard members.

Opposed top and bottom portions of such partition, which extend beyond the end limits of the stud, are engaged by runner members. The upper runner may be fixedly secured to a supporting ceiling or may comprise a cornice if the partition extends only part way to the ceiling, as may be the case when partitions are employed having glass panels incorporated in the upper portion thereof.

2

It has been found that by appropriately dimensioning the stud web portion and elements of the runner members which engage the upper and lower edge portions of the wallboards, a flexing of the wallboard edge portions, extending beyond the end limits of the stud, will occur and thus a binding engagement exists between the wallboards, and the stud and runner members.

For a more complete understanding of this invention reference will now be given to the drawings, wherein:

FIGURE 1 is a fragmentary elevational view of a hollow wall partition which incorporates therein glass panel members;

FIG. 2 is a sectional view taken on line 2—2 of FIG. 1;

FIG. 3 is an enlarged fragmentary sectional view of a partition construction formed in accordance with this invention which extends from the floor to the ceiling and showing the flexure of the upper and lower edge portions of the wallboard courses;

FIG. 4 is a fragmentary sectional view taken on line 4—4 of FIG. 1;

FIG. 5 is a fragmentary sectional view illustrating a modified form of cornice construction which may be employed in the construction illustrated in FIG. 2;

FIG. 6 is a view similar to FIG. 3 but on a reduced scale in which the illustrated partition employs a modified ceiling runner;

FIG. 7 is a fragmentary perspective view of a stud member employed in the subject construction; and

FIG. 8 is a sectional view taken on line 8—8 of FIG. 1.

Referring now more particularly to FIG. 1, the numeral **10** identifies a partition which incorporates therein glass panel members **12**. As is seen more clearly from the sectional view of FIG. 2, the glass panels **12** engage a holder **14** which is secured to the central longitudinal portion of a supporting cornice member **16**. The cornice member overlies the upper edge portion of a hollow wall **18**, the latter being formed by laminated wallboard members **20**, arranged in abutting edge-to-edge relation, as seen in FIGS. 1 and 4, so as to define spaced parallel courses. As is more clearly seen in FIG. 4, each of the members **20** comprises two panels **20*a*** which are secured together by means of an interposed layer of adhesive **22**. Rounded corner portion **24** of each panel **20*a*** and the omission of adhesive at the edge portions of the panels assist in defining a longitudinal slot or recess **26** in the vertical edge of each member. The double thickness of the paper facing **19** enveloping the panel cores in combination with the adhesive layer **22** between the panels form the inner portion of the recess **26**. It is feasible that a single thick wallboard may be employed and a recess milled or otherwise formed in the edge central portion.

Interposed between the opposed courses of abutting members **20** are stud members **28** which have a general H-shaped cross-sectional configuration and are of such a length that the end limits thereof are spaced a substantial distance from the upper and lower edges of the partition, see FIGS. 2, 3, 5, and 6. The reason for the shortened length of each stud will be discussed more fully hereinafter. Each stud **28** is provided with a web **30**, which has formed integrally therewith at opposed longitudinal edges, transversely extending flange portions **32**, as seen more clearly in FIG. 7. These flanges interlock with the wallboard members **20** by being snugly receivable within the recesses **26** formed in the vertical edges of each panel.

Referring once again to FIG. 2, it will be noted that the wallboard courses are maintained in their erect position with the cooperation of floor runner **34**. Runner **34** extends the length of the partition and comprises an elongate web portion **36** which is integrally formed with opposed angle-like portions **38**. Terminal portions **39** are provided which extend laterally outwardly from the lower

edges of portions **38** and rest flush on a floor or other supporting surface F and are secured thereto by means of nails **40** or other equivalent securing means; the latter being spaced at desired intervals along the length of each floor-engaging portion **39** of the floor runner **34**.

Base or trim plates **42** are provided which may be secured to the lower edges of the wallboard members by means of attachment clips **44**, the latter being spaced at desired intervals along the lower edge of the wallboard courses and secured thereto by means of through-bolt-and-nut assemblies **46**, see FIGS. 2, 3, and 6. It will be noted that the through-bolt of each assembly **46** traverses the hollow wall at a point above the floor runner **34** and beneath the lower end of stud **28** so as to avoid engagement with the same. It is also feasible that discrete screw members may be employed for each attachment clip **44** and the same secured and anchored to the adjacent angle-portion **38** of the floor runner.

As previously noted in FIG. 2, the upper portion of the partition wall construction **10** is defined by the cornice **16**. Cornice **16** may be an extruded member formed of aluminum or other suitable material, and is provided with a pair of outer depending clamp portions **50** between which are disposed a pair of inner spaced depending clamp portions **52**, each of the latter having an angularly disposed terminal edge portion **54** to facilitate insertion of a member **20** between corresponding clamp portions **52** and **50**. Longitudinal passageways **51** are arranged along the upper corner portions of the cornice and aid alignment of adjacent cornice sections in conjunction with cooperating pin means insertable therein (not shown).

It should be noted that depending clamp portions **52** may serve to engage an elongate cylindrical member (not illustrated) of proper dimensions so as to be snugly receivable therebetween; such member will serve to maintain the partition sections in alignment as well as reinforce the same against transverse forces. It should also be appreciated that a section of cornice **16** illustrated in FIG. 2 may also be disposed in a vertical plane so as to conceal exposed edges of the wallboard member, such as in a doorway. In such a construction a reinforcing cylinder or other member could be arrnged with the longitudinal axis thereof running along the vertical plane. In either construction the reinforcing member would readily snap into place between clamps **52**.

The sectional view of FIG. 8 illustrates three glass panels **12** maintained in a vertical plane with the assistance of glazing channels **13** mounted on vertical glazing post **15**. Support **17** which may be a hollow pipe as illustrated is snugly received within the post **15** and serves to reinforce same. Post **15** may be an integral member or in two or more parts as illustrated. A plurality of supports **17** which are anchored in the floor and which may extend to and be anchored in the ceiling are disposed throughout the partition construction of FIG. 1 and greatly assist the structural soundness thereof.

In accordance with this invention, in the construction of the hollow wall portion **18** of the partition **10**, the normal interval between the inner surfaces of opposed members **20**, is determined by H-studs **28** and is identified in FIG. 2 by the interval A, which, in this instance, is slightly less than the width of the web portion **36** of floor runner **34**. This slight differential is effected by forming the hollow wall **18** in such manner that the width of the H-stud web **30** is slightly less than the combined normal length defined by the runner web **36** and the thicknesses of the two innermost panels **20***a*. As a result of such dimensional relationship the lower edge portions of the wallboard members **20**, which project beyond the lower end limit of the stud, will be flexed outwardly a slight amount by reason of runner web **36** and, thus, the exposed surface of each wallboard member **20** adjacent the lower edge of the partition will not be in coplanar relation with the central vertical portion of the wallboard members engaged by the stud **28**. Furthermore, this dimensional differential between stud web **30** and runner web **36** will cause the members **20** to firmly engage corners **56** of the floor runner **34**, and thus assure a rattle-free, sturdy hollow wall construction.

Similarly, the interval between the offset lower edges **58** of the cornice clamp portions **50**, which contact the exposed surfaces of members **20**, with slightly less than the normal interval between the outer exposed surfaces of members **20** effected by stud **28**; this interval is identified in FIG. 2 by the letter B. The interval between the offset edges **58** of the cornice clamp portions **50** is identified by the letter C in FIG. 2. Accordingly, cornice **16** will be fabricated with the interval C slightly less than the normal interval B between the exposed surface of central vertical portions of the wallboard members engaged by stud **28**, whereupon the upper edge portions of the wallboard members, which project beyond the upper end of stud **28**, will flex inwardly a slight amount and thus cause the exposed surfaces of the upper edge portions of the members not to be in coplanar relation with the remainder of the exposed surfaces, the spacing between corresponding clamp portions **50** and **52** permit flexing of member upper edge portions. Such outer panel portions define the opposed surfaces of the illustrated hollow wall **18**.

In certain instances, the interval between the cornice clamp portions **52** may be slightly greater than interval A and interval C greater than interval B, whereupon the upper edge portions of the members **20** will flex outwardly instead of inwardly. In either case, a tight rattle-free engagement between the cornice **16** and upper terminal portions of wallboards **20** is effected.

In view of the clamping engagement between terminal portions of the depending clamp members **50** of the cornice and the engaged wall panels **20**, depending clamp portions **52** may not be essential so that the modified cornice **16***a*, illustrated in FIG. 5, may be employed to equal advantage. In FIG. 5 the interval between the offset lower edges of depending clamp portions **50***a* is slightly less than the normal interval B_1 between the outer surfaces of the central vertical portions of the members **20** engaged by stud **28***a*. The floating H-studs **28** and **28***a* provide ample partition strength and assist in retaining the panels **20** in fixed alignment whether in the position shown in FIG. 2 or 5.

The dimensional difference between the parallel wallboard interval as defined by the H-stud web and the interval defined by the wallboard engaging portions of the floor runner or cornice in the wall **18** is determined by the desired degree of clamping and resulting member flexing to be effected by the cornice and floor runners. It has been found that a dimensional difference of about 1/32 of an inch will provide a rattle-free construction.

FIGS. 3 and 6 illustrate partition wall constructions which extend from floor F to ceiling S. Floor runner **34***a* of FIGS. 3 and 6 may be precisely the same as that previously described in the discussion of FIG. 2. Ceiling runner **60**, however, in FIG. 6, is quite different from the cornice construction **16** and comprises an elongate web portion **62** to which is secured converging wall portions **64**. Elongate strip portions **66** are in turn formed integrally with wall portions **64** and are also formed integrally with terminal converging portions **68** which complete the ceiling runner construction.

The width of web portion **36***a* of the floor runner **34***a* is slightly greater than the interval A_2 illustrated in FIG. 6 which defines the interval between the opposed inner surfaces of wallboard members **21**; the latter are formed in precisely the same manner as the panels **20** of FIG. 2 and engage H-studs **28***b* in the same manner described in the above discussion of FIG. 2.

In view of the size relationship between the width of floor runner web **36***a* and the interval A_2, the same tight abutting relationship will be effected at corner portions **56***a* of the floor runner **34***a* of FIG. 6 as is effected in the

construction of FIG. 2 and the outward flexing of the lower edge portions of the wallboard members will result.

The ceiling runner **60** may have its web portion **62** of precisely the same width as the panel interval A_2 in FIG. 6. A tight clamping engagement will be effected between runner **60** and wallboards **21** since the straight line interval between corners **70** of ceiling runner **60** and a vertical plane touching the distal edge of the adjacent converging strip **68** is less than the thickness of the wallboard **21** engaged thereby. It of course follows that the interval between the distal ends of strips **68** is less than the normal interval between the outer surfaces of wallboards **21** and thus, inward flexing of the upper portions of the wallboards between corners **70** and edges **68** will occur.

The enlarged sectional view of FIG. 3 illustrates a partition construction similar to that of FIG. 6. The partition of FIG. 3, however, employs a modified ceiling runner **67** secured to ceiling S by means of nails **69** or other equivalent means. Runner **67** comprises a channel-like member having a web portion **71** interconnecting opposed converging strip portions **73**. To insure a desired clamping engagement with wall boards **21**, the interval between the distal ends of strip portions **73** is slightly less than the normal interval between the outer surfaces of the central vertical portions of the wallboard which interlock with floating H-studs **28*b***. The illustrated exaggerated distortion of the upper portion of the engaged wallboards **21** depicts clamp-like engagement between runner **67** and the flexed wallboard upper edge portion interposed therebetween. The inward flexing of the wallboard upper edge portions is effected by reason of the fact that the upper edge of stud **28*b*** terminates a substantial distance below runner **67**, as is clearly seen in FIG. 3.

Similarly, at the bottom of the illustrated partition wall of FIG. 3 the web **36*a*** of the floor runner **34*a***, which is precisely the same as that of FIGS. 2 and 6, is illustrated as being of greater width than the normal spacing between the inner surfaces of the central vertical portions of opposed members **21** engaged by the H-studs **28*b***.

FIG. 3 depicts an outward distortion of the lower edge portions of members **21** where the same engage corners **56*a*** of the floor runner. Such distortions or flexing of the wallboards and the resulting rattle-free engagements between the wallboards and runners are of course also effected in the constructions of FIGS. 2, 4 and 5.

It is seen, therefore, that a construction has been provided which is particularly adapted for non-load-bearing partitions which enables a sturdy, rattle-free partition to be rapidly erected without the need of employing a plurality of discrete securing means. The provided construction may also obviously be readily disassembled. Securing means are not necessary for purposes of securing the panel members of the partition to a supporting stud interposed between such panels. In view of the absence of such securing means no finishing operations are necessary, as when such means are employed, to cover the same or the depressions made thereby so as to assure a desired smooth wall surface.

As will be noted from the various views in the drawings, the H-stud members may terminate adjacent to, but spaced from, the floor runner or cornice member engaging the terminal portions of the panel members which

are employed in the partition. It is suggested that the H-studs terminate at a distance of approximately six inches from a cornice or runner member.

It is feasible that two discrete wallboards having relieved edge portions may be substituted for each laminated wallboard **20** or **21** above described and the resulting construction will also be sturdy and rattle-free.

The above discussed partition construction in addition to providing the advantages set forth is simple in nature and accordingly reduces the cost of manufacture and construction.

This invention is to be limited only by the scope of the appended claims.

I claim:

1. A partition construction comprising wallboards arranged in spaced, substantially parallel relation, each wallboard having upper and lower edge portions and a central portion, substantially horizontally disposed runner means arranged in spaced, vertically aligned relation and contacting faces of said wallboards at said upper and lower edge portions, and an upright floating stud means disposed intermediate said runner means, the length of said stud means being substantially less than the height of said partition and having the opposite ends of said stud means spaced from each of said runner means; said stud means having opposed, substantially parallel flange portions interlockingly engaging side edge portions of said wallboard central portions, and a web portion interconnecting said flange portions, the distance between the wallboard-face-contacting portions of each runner means being different than the distance between the contacted faces of said wallboards at their central portions whereby to flex the upper and lower edge portions of said wallboards.

2. In a hollow wall partition extending partway between a floor and ceiling, the combination comprising parallel courses of wallboards in edge-to-edge relation and defining spaced surfaces of said partition, said wallboard abutting edges being slotted, floating stud means of H-shaped cross-sectional configuration, having flange portions transversely disposed to an interconnecting web portion, said stud means flange portions interlockingly engaging said wallboard slotted edges, the length of said stud means being substantially less than the height of said partition whereby the upper and lower edge portions of said wallboards project a substantial distance beyond the end limits of said stud means, and cornice means engaging the upper projecting edge portions of said wallboard, said cornice means having a central portion and spaced outer portions depending from said central portion, the spacing between the distal ends of said cornice means outer portions being less than the normal spacing between the outer surfaces of said wallboard engaged by said stud means and effecting flexing of the upper projecting wallboard edge portions toward one another.

References Cited in the file of this patent

UNITED STATES PATENTS

1,951,778	Snead	Mar. 20, 1934
2,154,520	Mackin	Apr. 18, 1939

FOREIGN PATENTS

500,149	Canada	Feb. 23, 1954

UNITED STATES PATENT OFFICE

CERTIFICATE OF CORRECTION

Patent No. 3,027,605 April 3, 1962

Nels Nelsson

It is hereby certified that error appears in the above numbered patent requiring correction and that the said Letters Patent should read as corrected below.

Column 1, line 43, for "apear" read -- appear --; column 3, line 42, for "arrnged" read -- arranged --; column 4, line 14, for "surface" read -- surfaces --; line 44, for "position" read -- partition --; line 52, for "1/32" read -- 1/32nd --; column 5, line 22, for "wall boards" read -- wallboards --; line 25, for "wallboard" read -- wallboards --; line 28, after "depicts" insert -- the --.

Signed and sealed this 4th day of September 1962.

(SEAL)

Attest:

ERNEST W. SWIDER
Attesting Officer

DAVID L. LADD
Commissioner of Patents