STAPLING APPARATUS

Filed Nov. 4, 1957 2 Sheets-Sheet 1

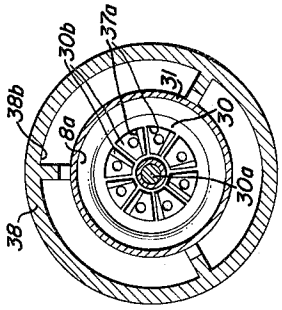

Fig. 4

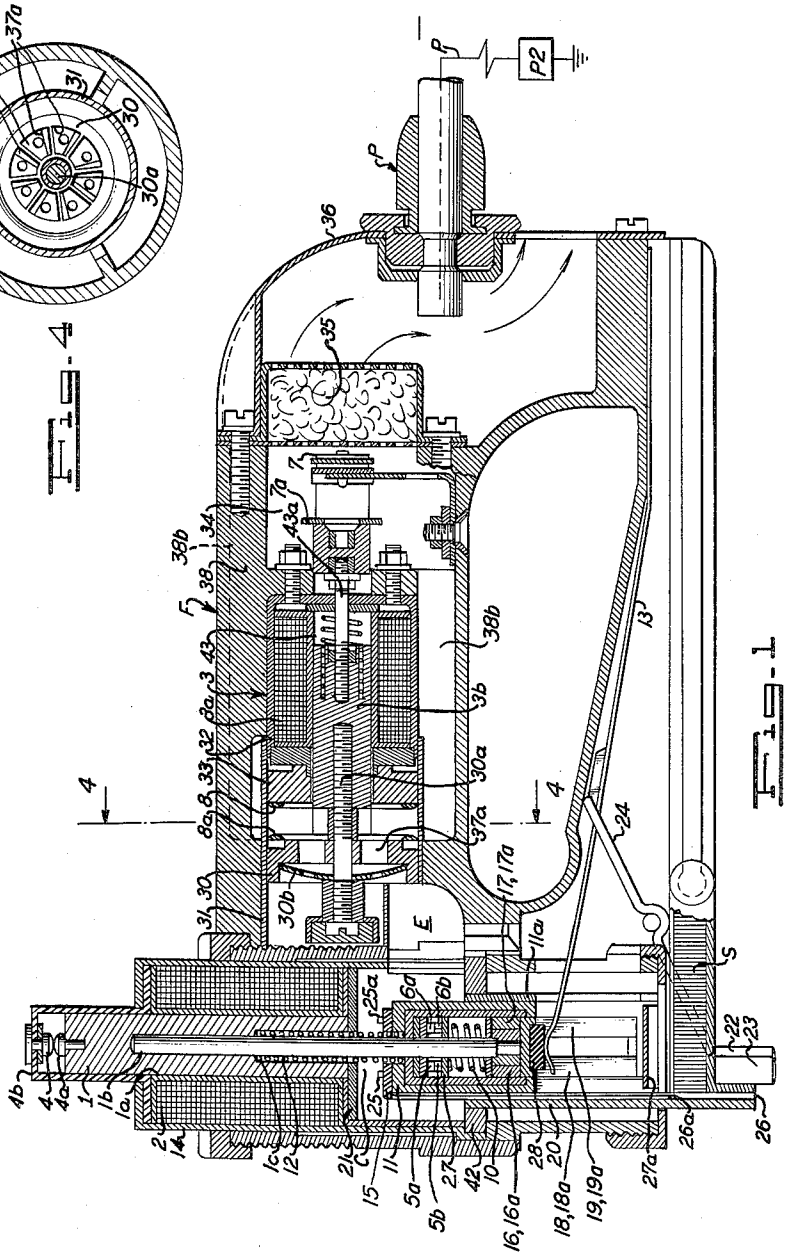

Fig. 1

STAPLING APPARATUS

Filed Nov. 4, 1957 2 Sheets-Sheet 2

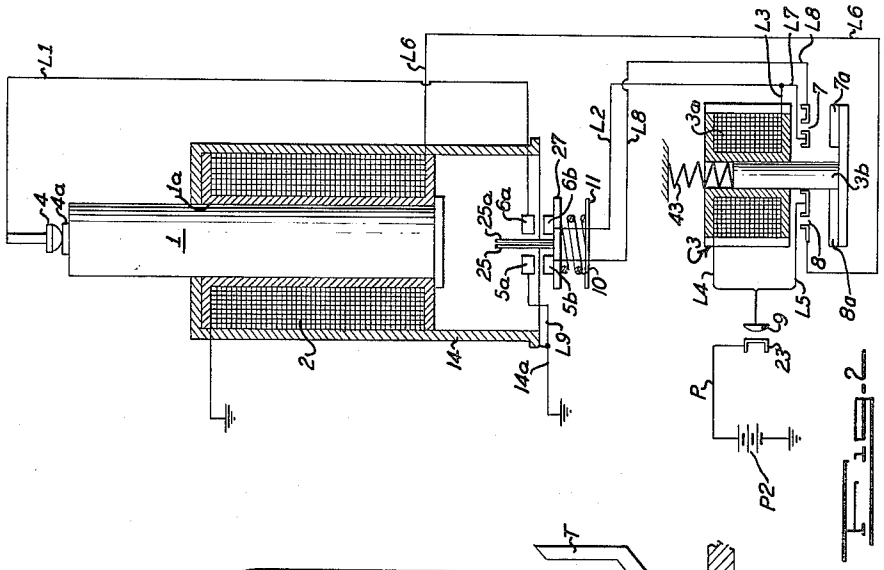

Fig. 2

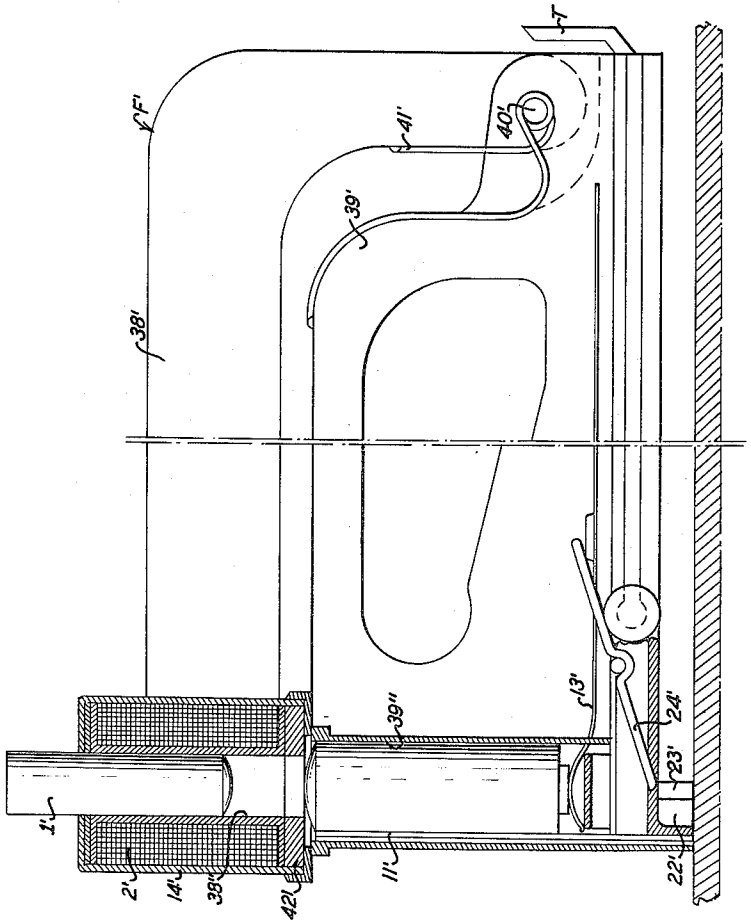

Fig. 1

United States Patent Office

3,017,636

Patented Jan. 23, 1962

1

3,017,636
STAPLING APPARATUS

Wolfgang Koennecke, Eberbach, Neckar, Germany, assignor to Elastic Aktiengesellschaft vormals M. Vogel A.G., Frankfurt am Main, Germany

Filed Nov. 4, 1957, Ser. No. 694,252
Claims priority, application Germany Nov. 3, 1956
5 Claims. (Cl. 1—49)

This invention relates to stapling devices.

It is an object of the invention to provide an improved stapling device.

Another object of the invention is to provide a stapling device adapted for holding multiple staples and for driving these staples singly with a variable number of strokes.

Briefly, in accordance with the invention, there is provided an apparatus comprising a frame having means for accommodating one or more staples or fasteners and further having a fastener driving channel through which the fasteners can be expelled. Moreover, there is provided a driver attached to an anvil movably supported on the frame and within the fastener driving channel for purposes of ejecting fasteners out of said channel. The invention further contemplates the use of a hammer movable independently of the anvil for striking the latter in order to cause the driver to eject a fastener which is aligned with the driving channel. Furthermore, the invention employs electromagnetic principles for actuating the hammer in order to make the same forcibly contact the anvil, whereby the latter performs its function.

The above objects and features of the invention, as well as the advantages thereof, will be better understood from the following detailed description of the preferred embodiment of the invention, as illustrated in the accompanying drawing, in which:

FIG. 1 is a side view substantially in section of an e mbodiment of the invention in connection with which a source of direct-current electrical power is employed;

FIG. 2 is a diagrammatic view illustrating the electrical circuits associated with the embodiment illustrated in FIG. 1; and

FIG. 3 diagrammatically illustrates an embodiment of the invention wherein there is provided a frame comprising pivotally connected sections and in association with which is employed a source of alternating-current electrical power; and

FIG. 4 is a sectional view taken on the line 4—4 of FIG. 1.

The stapling device illustrated in FIG. 1 comprises generally a frame F, in which is supported a hammer 1 shown in its normal position of rest and susceptible of being displaced vertically downwards under the influence of an electromagnetic coil 2, which is actuated as will hereinafter be described. The apparatus further comprises an auxiliary electromagnetic relay 3 the purpose of which will become hereinafter apparent.

Also supported within the frame F is an anvil 11, shown in the position it assumes at the beginning of a stapling operation, the anvil 11 being so positioned that it is struck by the hammer 1 for a vertical displacement in the downward direction.

Attention is directed to the fact that the frame includes elements 1*a* and 11*a*, which define mutually aligned channels wherein the hammer 1 and anvil 11 are accommodated in order that these members are capable of performing their respective functions.

Accommodated within a blind bore 1*c* centrally provided in the hammer 1 is a rod 1*b*, which extends downwardly into the anvil 11 which slidably and centrally accommodates this rod. Encompassing the rod 1*b* is a

2

spring 12, which extends into bore 1*c* and bears on anvil 11. The function of the spring 12 is to urge the hammer 1 into its normal position of rest on completion of each driving operation.

At the top of the hammer 1 are arranged two contacts 4 and 4*a*, the latter of which is supported directly on the hammer 1 and moves therewith. Contact 4 is fixedly mounted on a cap 4*b*, which is of insulating material and which is fixedly supported relative to the frame.

The frame defines a chamber C, into which the hammer 1 descends in order to perform its function of striking the anvil 11. Chamber C at its lowermost extremity is delimited by plate element 42, which defines the lowermost position to which the hammer 1 can descend.

In the frame is provided a driving channel 26 which accommodates a driver 26*a* affixed to the anvil 11 and moving therewith to eject one of a series of staples S, which are fed towards channel 26 by means provided by any conventional magazine arrangement.

Mounted internally of the anvil 11, which has the general form of a cylinder, are sets of contacts 5*a*, 5*b* and 6*a*, 6*b* which are capable of assuming positions whereat they are either engaged or disengaged. Contacts 5*b* and 6*b* are mounted on disc 27 which is movable relatively to anvil 11. The relative positions of contacts 5*a*, 5*b* and 6*a*, 6*b* are controlled through the intermediary of pins 25 and 25*a*, which are slidably accommodated in the top of the anvil 11 and in a support 15 and which have rigid connection with disc 27 as shown in FIGURE 2 so that, upon being struck by the hammer 1, pins 25 and 25*a* cause disc 27 to be lowered, thereby causing spring 10 to be compressed and the contacts 5*b* and 6*b* to be moved apart from contacts 5*a* and 6*a*.

As will be hereinafter explained, it is the function of contacts 5*a*, 5*b* and 6*a*, 6*b* to couple the coil 2 to a source of electrical power and, inasmuch as the contacts 5*b* and 6*b* move with disc 27 and the anvil 11, they are provided respectively with electrical connections to brushes 16, 16*a* and 17, 17*a* movable with anvil 11 and which slidably and continuously engage bus bars 18, 18*a* and 19, 19*a* fixed to frame F, to which electrical connections can be fixedly made. Accordingly, despite the movement of the disc 27 and the anvil 11, provision is made for the feeding of electrical power to contacts 5*b* and 6*b*.

As has been indicated above, the hammer 1 is motivated by electromagnetic forces and, consequently, is of any mechanically strong ferrous material. To provide for a complete magnetic circuit, there is provided, supported on the frame F, a yoke 14 of ferrous material which, with the hammer 1, constitutes a substantially closed magnetic circuit.

In the chamber C, which is defined within the frame as noted above, is provided a piston 21 which is connected to and moves with the hammer 1, so that a movement of the latter causes an expulsion of air from the chamber C. Actually, the hammer 1 contacts the anvil 11 through the intermediary of piston 21, but this has no effect on the desired result, provided that the piston 21 is made of sufficiently rigid material. Chamber C is provided with an exhaust vent, generally indicated at E, the flow of air through exhaust vent E serving a purpose which will hereinafter be indicated. The anvil 11 is made of non-magnetizable material in order to prevent the premature ascent of this part.

Completing the structure of the anvil 11 is the internally accommodated spring 10 situated between the disc 27, to maintain contacts 5*a*, 5*b* and 6*a*, 6*b* normally in engagement, and the driver 26*a*. Adjacent the anvil 11 is a guide portion 20 of frame element 11*a*, which serves the purpose of guiding the driver 26*a*.

It will be moreover noted that the anvil is provided with a lower member **28** which may be made of rubber, capable of descending with the anvil **11** towards a base member **27***a* affixed to the frame. Element **28** is, however, engageable by a leaf spring **13** (FIG. 3), the purpose of which is to raise the anvil **11** to its initial position for commencing a new stapling operation after a previous stapling operation has been completed. The spring **13** will raise the anvil only when the device is not against the work due to elements **22** and **24**. Thus, spring **13** will not raise the anvil during a given driving operation. The strength of spring **13** exceeds that of the spring **12**, so that normally spring **13** is effective to maintain the anvil **11** and driver **26***a* in a non-stapling position when no stapling operation is to be performed and the work is removed, thus permitting insertion of a new staple, and is effective to return anvil **11** to its upper position after the completion of a stapling operation and de-energization of coil **2** and is necessarily maintained ineffective to control the position of anvil **11** when a stapling operation is being performed. In order to control the position of anvil **11** in this manner, there is pivotally mounted on frame F a lever **24**, which is responsive to the positioning of a vertically movable abutment **22** against the body to be stapled, for displacing spring **13** downwardly away from the anvil during a stapling operation. There is also provided on the frame F a second vertically movable abutment **23**, which actuates an electrical switch, as will be hereinafter indicated in greater detail. It will be understood that both abutments **22** and **23** are moved into a position which is flush with the end of the driving channel **26**.

Referring again to the electromagnetic switch **3** which has been noted above, it is seen that this switch comprises an electromagnetic coil **3***a* and a movable armature **3***b*. In conventional manner, the application of electrical power to coil **3***a* causes a displacement of the armature **3***b*. Slidably accommodating the armature **3***b* to the left of coil **3** is a disc member **33**, on which is circularly disposed contact **8**. A further disc **30** is rotatably mounted on a shaft **30***a*, which is fixed in a blind bore provided centrally within armature **3***b*. Contact **8***a* is circularly disposed on disc **30** for engagement with contact **8** on disc **33**. Disc **30** is positioned by vented spring **30***b* to ensure electrical connection of the contacts **8** and **8***a*. Disc **30** is connected to its hub by means of spokes **37***a*, which are inclined relative to shaft **30***a* for the purpose which will be explained hereinafter. All of these latter elements are accommodated within a cylindrical element **31** supported in the frame.

Armature **3***b* is urged normally to the left by a spring **43**, which is effective to move disc **30** to the left and, consequently, disengage contact **8** from contact **8***a*. Spring **43** centrally accommodates a rod **43***a*, the purpose of which is to cause engagement and disengagement of contacts **7**, **7***a* which are mounted in a space **34** conveniently provided so that the contacts **7**, **7***a* may be closed in response to actuation of the coil **3***a*.

Coil **3***a* is accommodated within a magnetizable housing **32** supported in section **38** of frame F, section **38** defining the aforenoted space **34**.

The rearmost end of the frame F is provided with a perforated cap **36**, chamber C discharging via exhaust E and various channels **38***b* included within the support section **38** into the space **34** and thence through a filter **35** and cap **36** to the ambient atmosphere.

It was previously noted in accordance with this embodiment of the invention that the use thereof is contemplated with a source of direct-current electrical power which may be introduced through electrical lead P into the apparatus by means of a conventional lead-in **P1**. It will be assumed, for the purpose of the discussion which follows hereinafter, that the electrically operated elements are connected between power source **P2** and ground, with the frame F of the stapling device grounded to one terminal of the power source P in conventional manner, and that the magnitude of the potential supplied to power source P is sufficient to effect the functions which are hereinafter ascribed to the various elements.

It is to be noted that the functions which are to be performed are the following: Hammer **1** is to descend on anvil **11** and, having applied its force thereto, the hammer is to be returned to its normal position of rest by spring **12** upon de-energization of coil **2** as mentioned heretofore, wherefrom it again descends on the anvil **11** upon re-energization of coil **2**, for the next driving stroke. It is necessary to note that a direct-current source of electrical power is being employed, so that provision need positively be made for enabling the hammer **1** to return to its initial position, and as mentioned heretofore, positive provision is made by means of spring **12**.

Reference is next made to FIG. 2, in which the necessary electrical circuitry associated with FIG. 1 is diagrammatically indicated. As indicated in FIG. 2, yoke **14** is connected to the ground of frame F as at **14***a*. The electrical circuit continues from yoke **14** through element **1***a* to hammer **1**, which makes a sliding electrical contact with element **1***a*, and through contacts **4** and **4***a* via line **L1** to contact **6***a* mounted on anvil **11**. Because spring **10** urges disc **27** upwardly, contacts **5***a*, **5***b* and **6***a*, **6***b* are closed. Line **L1** is connected to line **L2**, which is in turn connected via branch line **L3** to coil **3***a*, and thence via branch line **L4** to contact **9** directly controllable by abutment **23** and connectable to source of direct-current power P. Abutment **23** engages contact **9** to cause contact **9** to be coupled to power source P for coupling lines **L4** and **L5** to power source P.

Consequently, if frame F is being urged against a body to be stapled, abutment **23** is moved upwardly into alignment with the base of the frame F having the opening **26** and connects contact **9** to source P, and coil **3***a* is actuated by means of the circuit described above. With coil **3***a* actuated, armature **3***b* is moved in such a manner as to cause contact **8** to bridge contacts **8***a*. Similarly, contact **7** bridges contacts **7***a*. Electromagnetic relay **3**, is therefore, fully actuated.

The bridging of contact **8***a* causes a continuous circuit to exist between power source P and ground, via contact **9**, branch line **L5**, contacts **8** and **8***a*, line **L6** and coil **2** to ground (undesignated, but shown near top of yoke **14**).

Similarly, a circuit exists between source of power P and ground through the intermediary of coil **3***a*, branch line **L3**, branch line **L7**, contacts **7** and **7**a, line **L8**, contacts **5***a* and **5***b*, and line **L9**.

As a result, coil **3***a* is self-actuating. Therefore, when hammer **1** moves downwardly against anvil **11** in response to the actuation of coil **2**, the disengagement of contacts **4** and **4***a* is of no significance, since this does not interfere with or open the circuit associated with coil **3***a*, which retains contacts **8** and **8***a* in engagement and, therefore, retains the coil **2** in active condition. As a result, hammer **1** continues to be driven downwardly by coil **2**, despite the disengagement of contacts **4** and **4***a* whereby to open the circuit of line **L1**.

When hammer **1** strikes the anvil **11**, it operates through pins **25** and **25***a* to open contacts **5***a*, **5***b* and **6***a*, **6***b*. At this time, hammer **1** has delivered an impact force to anvil **11** and has effectively performed its function. The opening of contacts **5***a* and **5***b* interrupts the only remaining circuit for coil **3***a*, and electrical power thereto is cut off. As a result, armature **3***b* is displaced by spring **43**, to open contacts **8** and **8***a* and deactivate coil **2**. Hammer **1** is then urged by spring **12** upwardly away from the anvil **11**, and contacts **4** and **4***a* are again engaged.

To permit a cylical operation for the same staple, when the hammer **1** achieves its uppermost position which is its normal position of rest, it re-engages contacts **4** and **4***a*, thereby again closing a circuit for coil **3***a* through line **L1** and the associated circuitry, whereupon the operation

repeats itself and a periodic and continuous hammering of anvil **11** is provided until the staple is driven and the work removed. At this time the anvil **11** and driver **26***a* are raised sufficiently by spring **13** to allow insertion of a new staple into the driving channel **26**.

During the movement of hammer **1** towards anvil **11**, air is forced from chamber C through exhaust E and against the inclined spokes **37** of disc **30**. Spokes **37** are inclined in a well known manner so as to form a blading arrangement of the propeller type. As a result of the flow of air against the inclined spokes **37**, disc **30** is slightly rotated, whereupon the relative positions of contacts **8** and **8***a* are modified. The effect of this provision is that subsequent engagements between these contacts cause wear in different positions, and the increased longevity of the device is therefore assured.

In summary, with respect to the first embodiment of the invention, there has been provided a stapling device in which a hammer is repeatedly applied to an anvil, for purposes of driving a given staple from the associated mechanism. A direct-current source of power is employed, and provision is made for returning the hammer to its initial position of operation, and repeated and cyclical operation of the hammer can be effected until the staple is driven and the work removed.

A further embodiment of the invention is illustrated in FIG. 3, where corresponding parts are designated by the same reference numerals as in FIGS. 1 and 2 with the addition of a prime superscript, in connection with which is employed an alternating current course of electrical power.

Briefly, this embodiment of the device comprises a hammer **1'**, operated by an electromagnetic coil **2'** housed in element **14'**, the hammer **1'** operating on an anvil **11'** which is maintained in operating poosition by a spring **13'** controlled by a lever **24'**, as has been described above. Abutments **22'** and **23'** are provided for respectively controlling lever **24'** and closing an electrical circuit in the same manner as has been previously described. Coil **2'** is maintained in position by an armature plate **42'**.

Since an alternating current source of power is being employed, the oscillating movement of hammer **1'** is assured for both of its directions of movement. Its magnitude of movement is, however, fixed and since there are no switches employed in this embodiment of the invention to terminate the movement of hammer **1'**, provision is made by the invention for effecting a sequentially increasing displacement of armature **11'**, as next described. Frame F' is provided in two sections **38'** and **39'**. These sections are pivotally connected by means of pivot **40'**. Section **38'** defines a channel **38''** by appropriately supporting coil **2'**. Channel **38''** guides the movement of hammer **1'**. On the other hand, section **39'** defines a channel **39''** which guides the movement of anvil **11'**.

Sections **38'** and **39'** are urged apart by spring **41'** appropriately engaged therewith. The moving part of these two sections is positively limited by means of a stop T. The operator of the device controls the relative positioning of sections **38'** and **39'** by opposing the force of spring **41'**. Thus, the closer section **38'** is moved towards section **39'**, the greater striking force with which hammer **1'** strikes anvil **11'**. This because, at the closest position, the relative magnetic poles of the hammer **1'** and the anvil **11'** are aligned at the time of driving and the striking force is greatest. Accordingly, provision has been made for successively driving anvil **11'** against a staple to be ejected from the stapling device.

It will be generally noted from what has been stated above that the method of the invention consists of cyclically and continuously hammering an anvil and driver against a staple or like device, in such a manner as to drive the same in increments into the body which is to be stapled. This method can be effected by various devices involving the use of either alternating or direct-current sources of electrical power.

The various features and advantages of the invention will now be apparent from what has been stated above. There will now be obvious to those skilled in the art many modifications and variation of the structure set forth. These modifications and variations will not, however, depart from the scope of the invention, as defined in the following claims.

What is claimed is:

1. Apparatus for driving a fastener into a body by means of a plurality of hammering strokes comprising a frame including means for accommodating the fastener and means for driving the fastener and having a fastener driving channel adjacent thereto for the ejecting of said fastener, an anvil movably supported on said frame adjacent said channel for ejecting the fastener out of said channel, a hammer movable independently of said anvil, and electromagnetic coil encompassing the hammer, said hammer being of ferrous material and being responsive to said coil for making forcible contact with the anvil for ejecting the fastener, a source of electrical power coupled to said coil for activating the same and a switch on the frame responsive to the pressure of the latter against said body for coupling the source to said coil, the hammer having a normal position of rest, and comprising contacts respectively positioned on the hammer and on the frame, said contacts being engaged with the hammer in its normal position, a further set of contacts on the anvil, an electromagnetic relay on the frame, said source being coupled via said relay to said further set and from the latter via the first said contacts to said hammer, the hammer being grounded to complete a first circuit, said coil being connected to ground and connectible via said relay to said source, the engagement of the first said contacts actuating said relay to couple the coil to said source, the engagement of the hammer and anvil controlling said further set of contacts to disconnect the source and coil.

2. Apparatus for driving a fastener into a body by means of a plurality of hammering strokes comprising a frame including means for accommodating the fastener and means for driving the fastener and having a fastener driving channel adjacent thereto for the ejecting of said fastener, an anvil movably supported on said frame adjacent said channel for ejecting the fastener out of said channel, a hammer movable independently of said anvil, an electromagnetic coil encompassing the hammer, said hammer being of ferrous material and being responsive to said coil for making forcible contact with the anvil for ejecting the fastener, a source of electrical power coupled to said coil for activating the same and a switch on the frame responsive to the pressure of the latter against said body for coupling the source of said coil, said apparatus further comprising a spring intermediate the anvil and hammer for providing a normal spacing therebetween, a further spring engaging the anvil for urging the same away from the driving channel opening and toward the hammer, and means on the frame responsive to the engagement of the frame with said body to deactivate said further spring.

3. Apparatus for driving a fastener into a body by means of a plurality of hammering strokes, comprising a frame including means for accommodating the fastener and means for driving the fastener and having a fastener driving channel opening adjacent thereto for the ejecting of said fastener, an anvil movably supported on said frame adjacent to the fastener driving channel for ejecting the fastener out of said opening, a hammer movable independently of said anvil, an electromagnetic coil encompassing the hammer, said hammer being of ferrous material and being responsive to said coil for making forcible contact with the anvil for ejecting the fastener, a source of electrical power coupled to said coil for activating the same, and a relay having a contact provided in circuit with said electromagnetic coil for placement thereof in circuit with said power source, a return device coupled to said contact within said anvil for returning said contact to a

starting position at the end of a work stroke, means on said frame responsive to the pressure of the latter against said body for coupling said power source to said coil and means associated with said relay within said anvil for opening said relay at the end of said work stroke of said anvil to remove said coil from the circuit of said source deactivating the same to return said hammer to its starting position, said return device actuating said contact to couple said coil in circuit with said scource to reactivate said coil.

4. Apparatus as claimed in claim 3, wherein said return device includes a spring.

5. Apparatus as claimed in claim 3, wherein said relay includes a further electromagnetic coil and set of contacts coupled to said source.

References Cited in the file of this patent

UNITED STATES PATENTS

1,604,220	Davis	Oct. 26, 1926
1,694,284	Santa Ana	Dec. 4, 1928
1,807,170	Peterson	May 26, 1931
2,272,533	Svenson	Feb. 10, 1942
2,403,947	Oussani	July 16, 1946
2,572,012	Curtis	Oct. 23, 1951
2,756,426	Campbell	July 31, 1956