Nov. 14, 1961 G. R. MOTT ET AL 3,008,826

XEROGRAPHIC DEVELOPMENT

Filed March 6, 1958

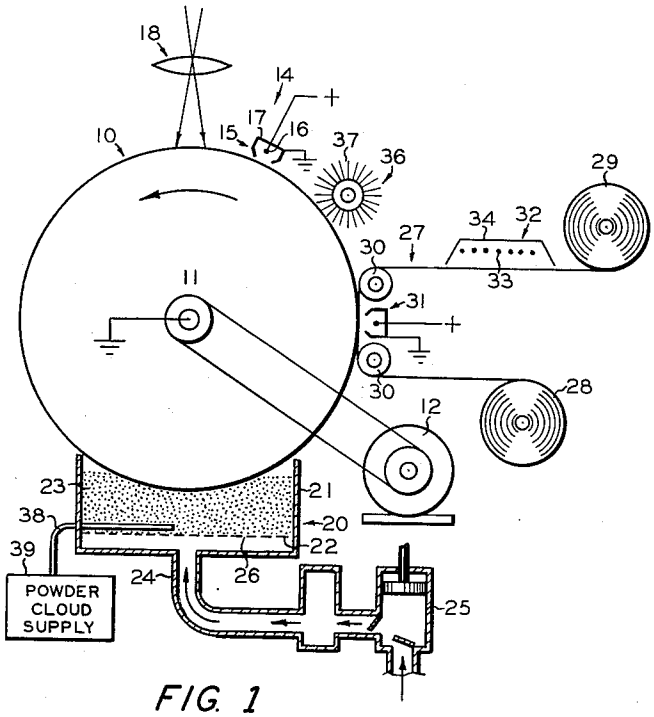

FIG. 1

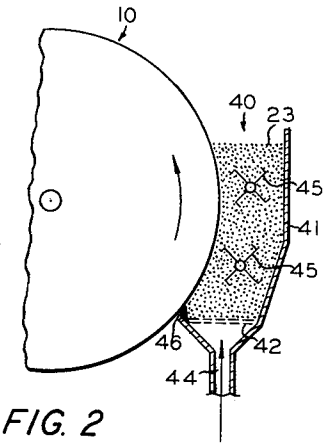

FIG. 2

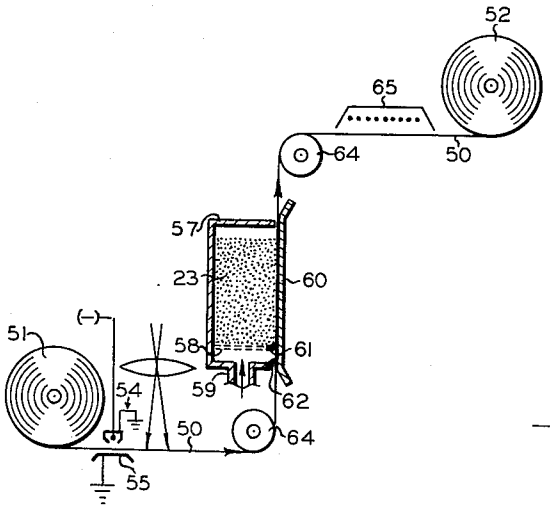

FIG. 3

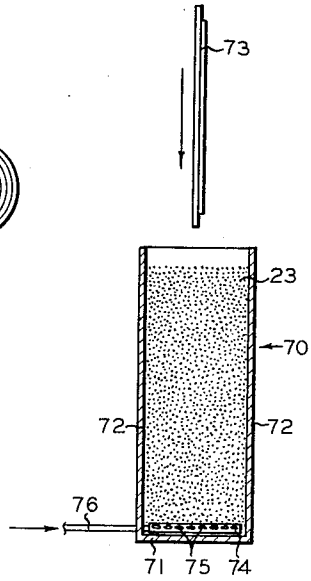

FIG. 4

INVENTOR:
George R. Mott
Ernest H. Lehmann

BY Frank A. Steinhilper
ATTORNEY

United States Patent Office

3,008,826

Patented Nov. 14, 1961

1

3,008,826
XEROGRAPHIC DEVELOPMENT

George R. Mott and Ernest H. Lehmann, Rochester, N.Y., assignors to Xerox Corporation, a corporation of New York

Filed Mar. 6, 1958, Ser. No. 719,581
4 Claims. (Cl. 96—1)

This invention relates in general to the art of electrostatic recording and in particular to the recording of visible images corresponding to electrostatic charge patterns, as, for example, in the art of xerography.

In xerography it is usual to form an electrostatic charge pattern corresponding to information to be recorded, generally by means of the combined action of electric field and exposure to light on a photoconductor. Alternatively, an electrostatic image can be formed by non-optical means such as, for example, by tracing a line of electrostatic charge from a point source adjacent to an insulator or by impressing an electric charge from an adjacent alphanumeric character electrode. In all of these instances an operation of development or electrostatic deposition is employed for visible recording to convert the electrostatic charge pattern or xerographic latent image to a visible pattern or image. Essentially and functionally, the development operation is carried out by presenting to the image surface an electrostatically attractable finely divided material such as, for example, a charged powder, dust, mist, or the like.

In present operations the art of xerographic recording is generally divided into two general types known as line copy recording and continuous tone recording. In line copy recording it is desired to produce a sharply colored line such as a black line on a contrasting background, generally white. In practice and in results achieved, line copy recording is sharply distinguished from continuous tone recording in which various shades of gray or color tones are desired. For line copy recording, it is desirable to produce essentially pure colors on extremely clear background so that the desired development technique calls for both complete deposition in image areas and complete absence of deposition in non-image or background areas. To accomplish this result it has been the practice to employ the developer material or finely particulate material in or on a condensed phase carrier such as generally a solid material or occasionally a liquid. The solid carrier material has usually been preferred for many significant reasons and has taken such forms as a cascading granular carrier, a fur brush, a simulated brush of magnetically carried fibrous structures of iron filings, continuous films or layers coated with a powdered developer material and the like. In the prior instances the various methods of conveying the developer material to the image surface on a solid carrier has had certain varying advantages and disadvantages, but it has been recognized that the granular carrier cascaded across the surface has consistently produced the best quality of dark line images on a clear background and is the method of choice where quality is important. The granular carrier system, however, has had the disadvantage of mechanical complexities and problems related to continuously recirculating the granular carrier so that it can be continuously cascaded across the image surface.

Now in accordance with the present invention the advantages of the two component solid developer are retained without certain of the corresponding mechanical disadvantages by supplying a fluent bed of solid phase carrier developer mixture through which or into which the image surface may be continuously passed. The fluent bed contains essentially a solid phase carrier material preferably in granular form and at least in relatively coarsely divided form made fluent by the continual presence of a gas phase in the developer body. In essence, therefore, the fluent bed comprises a finely divided developer material coated on a relatively more coarsely divided carrier material such as a granular carrier mixed with interspersed air in an amount sufficient to keep the mixture in a fluidized condition whereby it has flow properties of a liquid.

2

The solid developer composition includes an electroscopic powder material comprising finely divided color material including various highly colored dusts, powders, and the like, such as, for example, finely divided pigmented or dyed resins, plastics, and the like. The developer powder will generally be in the order of micron sizes ranging from sizes as high as 20 to 30 microns down to submicron sizes, including particle sizes equivalent to commercially available carbon materials such as carbon blacks. Desirably, the developer powder may be powdered resin materials, preferably thermoplastic, colored with carbon blacks or various colored pigments as disclosed in U.S. Patents 2,638,416 and 2,659,670.

Suitable carrier materials are well known in the art and may include the same carrier materials as are employed for conventional cascade development as disclosed in U.S. Patents 2,638,416 and 2,618,551. In addition, there may be employed carrier materials of smaller particle size such as, for example, finely divided magnetically attractable materials that can be moved to and away from the image surface by magnetic means, or finely divided carrier particles of high specific gravity that will not cling to the image surface because of their relatively high weight. In addition, coarser materials may be used, subject to the functional limitation that they must be of sufficient fineness to be maintained in a fluent state by means of the passage and entrainment of gas.

The general nature of the invention having been set forth, the invention will now be more fully explained by the following specification and drawings in which:

FIG. 1 is a diagrammatic view of a xerographic machine according to one embodiment of the invention;

FIG. 2 is a diagrammatic view of a modified xerographic machine encompassing a development section according to another embodiment of the present invention;

FIG. 3 is a diagrammatic view of a xerographic machine employing an image web such as a photoconductive web;

FIG. 4. is a diagrammatic view of a modified development mechanism.

In FIG. 1 is illustrated a xerographic machine employing one embodiment of this invention. The machine includes an image forming member such as, for example, a xerographic cylinder generally designated **10** and generally including an insulating or photoconductive insulating layer disposed on a conductive backing. The cylinder is rotatably mounted on a suitable axle **11** or other bearing member and is adapted to be rotated by drive means such as, for example, an electric motor **12** or the like. Preferably the cylinder, and in particular its conductive backing, is electrically grounded. The image forming or image receiving surface of the xerographic cylinder **10** is adapted to be rotated past appropriate xerographic processing stations disposed and positioned to form an electrostatic image on the cylinder surface. For example, when used with a photoconductive insulating xerographic image surface, the xerographic processing stations may include means for charging or sensitizing, exposure means, and cleaning means. Illustrated in the figure is a charging station generally designated **14** at which is positioned a corona discharge electrode **15**, desirably one or more high voltage corona discharge wires **16** mounted within a

grounded shield 17 and adapted to be connected to a high voltage source such as, for example, a positive polarity direct current source of several thousand volts. In general the voltage applied to the corona discharge electrode will be sufficient to cause air ionization surrounding the corona wires and it is understood that such a corona discharge potential is generally in the order of several thousand volts and usually 5 to 10 thousand volts as disclosed, for example, in Walkup U.S. 2,777,957.

Positioned next adjacent to the charging station is an exposure station generally designated 18 and including suitable means for projecting or otherwise directing a light or optical image onto the surface of the xerographic drum. The exposure station may include a slit projection mechanism for exposing onto the drum surface a moving projected image of microfilm or the like, and may include means for projecting onto the surface documentary or other information or an image corresponding to the face of a cathode ray tube or the like. As is disclosed in Carlson U.S. 2,297,691, the combination of electric field and exposure to activating radiation forms on the drum surface an electrostatic image capable of being developed or made visible by deposition of finely divided charged particles.

Positioned at a subsequent location around the circumference of the drum is a development station generally designated 20. According to the embodiment of the invention illustrated in this figure, the development station comprises a tray or receptacle 21 adapted to receive a charge of developing material and so positioned that the drum rides in the development tray. Mounted across the bottom of the tray and preferably spaced slightly from the bottom is a foraminous plate 22 adapted to retain and support solid material on the surface and to permit the passage of air or other gas therethrough. A charge of developer 23 is illustrated in position on the tray. Positioned below the porous plate 22 is an air or gas inlet tube 24 operably connected to an air supply means such as a compressor 25 adapted to feed a continuing supply of air or other gas under pressure into the development chamber through the porous plate 22.

The foraminous plate 22 is generally characterized by having a multiplicity of pores or openings extended therethrough, such pores being spaced widely and preferably substantially uniformly across the plate surface. It is furthermore of extreme importance that these pores or openings 26 be sufficiently fine so that they have a high resistance to the flow of air at least sufficiently high so that the plate 22 is substantially more resistant to the flow of air therethrough than is the solid bed of developer 23. It has been found that with porous plates of relatively low flow resistance so that the resistance to air flow is concentrated in the developer head, the air flow becomes channeled into relatively small areas and the bed of developer bubbles rather than remaining fluent. Accordingly, therefore, the foraminous plate or porous material 22 is characterized by high resistance to the flow of air so that generally an air pressure in excess of about 40 pounds per square inch is maintained in the chamber beneath this porous plate.

Positioned subsequently around the surface of the xerographic drum is an image transfer station generally designated 27 including for example a supply roll 28 of transfer material such as, for example, a roll of paper and a take-up roll 29 together with guide means and the like to feed the image transfer material into contiguous relationship with the xerographic drum. As illustrated in the figure, suitable guide rolls 30 may guide and optionally drive the transfer web into contact with the xerographic drum, and transfer means such as, for example, a corona discharge electrode 31 is positioned to transfer the developer image to the image web at the transfer station. Preferably, the transfer means is a corona discharge electrode of substantially the same construction as is located at the charging station 14 although other transfer means may be employed such as the means disclosed in U.S. Patent 2,807,233. For the usual case of direct or positive-to-positive photographic copy the charging electrode 15 and the transfer electrode 31 are of the same polarity and for the opposite situation of photographic reversal the electrodes are of opposite polarity. Optionally positioned near the transfer station and along the line of travel of the transfer web subsequent to the transfer station is a fusing station generally designated 32 and including a plurality of heating elements 33 suitably contained within a housing 34 and adapted to fuse onto the web surface the image that has been transferred thereto. It is understood that suitable vapor fixing means may be employed as disclosed for example in Carlson Patent 2,776,907.

Disposed next adjacent to the transfer station and between the transfer station and the charging station is a cleaning station generally designated 36 and comprising for example a cloth or, preferably, rotatable brush 37 operated by suitable drive means to brush against the xerographic drum surface and remove residual powder therefrom. Suitable brush cleaning apparatus is illustrated in Turner et al. U.S. Patent 2,751,616.

If desired, provision may be made for automatic replenishment of the developer powder or, alternatively the depleted powder may be replaced manually upon inspection and evaluation. A simple replenishment device may comprise an air supply tube 38 feeding from a powder cloud supply 39 to inject a very slow flow rate of powder bearing air into the fluent developer bed, preferably just above the foraminous plate 22.

In FIG. 2 is illustrated a preferred embodiment of the invention wherein the development station is positioned at the side of the drum rather than at the bottom thereof. It has been found by placing the developer station at the side of the drum or along a substantially vertical surface, it is possible to produce very drastically improved quality of image development. When the free surface of the developer bed against which the image is developed is substantially slanted with respect to perpendicular direction one of two situations generally occurs. If the surface slants inwardly and up the flow of air tends to concentrate along the image surface and the development quality is significantly impaired. When the free surface or image development surface slants outwardly and up, then there is a dead spot in the fluent developer bed and again the quality of image development is significantly impaired. With the image surface at a position other than vertical a liquid image development is achieved, but extreme care is required with design perimeter, with flow rates, thickness of developer beds, and the like, in order to achieve proper development. With the developing surface substantially vertical greater freedom of design is possible and in general very significantly improved development quality can be achieved. As illustrated in FIG. 2 a xerographic drum generally designated 10 is positioned to pass through the appropriate xerographic processing stations comparable to those described in connection with FIG. 1 and thence to a development station generally designated 40. Desirably, the drum is of relatively large diameter so that the development area is substantially vertical. At the development station is a developer hopper 41 adapted to contain a supply of developer material 23. Positioned across the bottom of the developer hopper is a foraminous plate 42 generally comparable with the foraminous plate 22 of FIG. 1. An air inlet 44 is suitably connected to an air supply for example, a compressor to maintain a continuing supply of air into the developer hopper. Optionally mounted and positioned within the developer hopper 41 are a plurality of agitating means or paddle wheels 45 operably positioned to maintain the developer supply in constant motion so as to insure the continued absence of channel-

ization. A suitable dust and retaining seal **46** is positioned between the developer hopper and the xerographic drum to prevent the escape of developer material therefrom.

In FIG. 3 is illustrated a modified embodiment of apparatus according to this invention, wherein an electrostatic image is formed and developed on a web of image forming material. Accordingly, in this embodiment of the invention a suitable image of the material **50** passes from a supply roll **51** to a take-up roll **52**. The image material may, for example, be an insulating web such as a web of insulating plastic or the like or a web or roll of thoroughly dried paper or paper coated with an insulating layer such as, for example, paper having a coating of polyethylene, polystyrene, a vinyl resin, an acrylic resin or the like. According to a preferred embodiment of the invention illustrated in FIG. 3 the image forming sheet or web **50** may be a strip of paper coated with a photoconductive insulating layer such as, for example, a binder layer of zinc oxide pigment in an insulating resin, or other binder layer of a photoconductive pigment in an insulating resin. When constructed for such photoconductive coatings the apparatus includes a charging station generally designated **54** such as, for example, a corona discharge electrode of the type described in connection with FIG. 1. For use in conjunction with a zinc oxide photoconductor it is generally preferred that the charging electrode be of a negative polarity. A suitable ground plate **55** is positioned on the opposite side of the path of travel of the photoconductive web. A suitable exposure station designated **56** is positioned and adapted to project an image to be reproduced onto the photoconductive web surface.

A developer hopper **57**, including side, top and bottom walls and open against one face, is positioned adjacent to the image web with the open face toward the image web. A charge of developer material **23** is contained in the hopper and at the open face of the hopper is adapted to rest against the image web **50** so that the image web **50** passes between the open face of the developer hopper and a support plate **60**. Positioned across the bottom of the developer hopper is a plate of foraminous ceramic material **58** adapted to retain and support the developer material and to permit the passage of air therethrough. An air inlet **59** is connected to a suitable air supply source to supply air under mild pressure into the developer hopper and through the foraminous plate. Suitable seals **61** and **62** prevent escape of the developer material around the foraminous plate **51** and out of the developer hopper **57**.

Guide rolls or driving rolls **64** guide and optionally drive the image web **50** from the supply roll **51** past the charging and exposure stations and into contact with the developer material through a heating oven **65** and to the take-up roll **52**.

In FIG. 4 is illustrated a modified developer chamber or container **70** adaptable to be used in conjunction with a xerographic machine such as that illustrated in FIG. 1. The developer container includes an open-topped box or pan having a bottom wall **71** and side walls **72** and adapted to receive a flat xerographic plate **73** dipped into the pan through the open top. Alternatively a rotary drum image surface such as that shown in FIG. 1 may be employed. Mounted near the bottom of the pan is a manifold **74** having a plurality of very fine holes or openings **75** desirably projecting in various directions into the interior of the pan. An air supply inlet **76** feeds air into the manifold and out through the plurality of holes. Desirably, the manifold consists of a plurality of arms, not shown, covering substantially the entire area of the bottom of the pan and adapted to feed a continuing supply of air into and across the base of the pan. A suitable developer supply is contained in the pan and surrounds at least the bottom surface of the xerographic drum.

The invention is intended to operate in conjunction with a two-component xerographic developer generally

comprising a particulate solid carrier material and a toner or developer powder. The carrier material serves the general functions of conveying the toner powder to the image surface and of chaging the toner powder by frictional electrification to a desired polarity. Generally, the carrier material is characterized by being of sufficient size or weight to cause it to be readily removable from the image surface, usually by means of gravity and without additional methods or apparatus for removal. If desired, however, the carrier material may possess magnetic properties whereby it may be conveyed magnetically or removed magnetically from the image surface if too small for unassisted gravity control. A presently preferred developer material consists of granular carrier particles mixed with and coated with finely divided dust or toner particles as disclosed, for example, in Walkup Patent 2,618,551.

It is to be understood that the size, shape and construction of the developing apparatus according to this invention will be interrelated with the nature of the developer material. Similarly, operating conditions such as the flow rate of air or other gas to the developer material will be interrelated with the nature of the material. In illustration of preferred methods and conditions of operation there has been employed a developer material, such as described in the hereinbefore mentioned Walkup U. S. Patent 2,618,551, available commercially from The Haloid Company, Rochester, New York, under the name "XeroX Developer Type 10." Employing this developer it has been found that a bed of the developer 6″ x 6″ scale filled to a depth of 3¼″ can be just barely fluidized by a flow of air therethrough in the order of about 8 cubic feet per minute. Tests have been carried out with foraminous screen materials of different sorts including thin flannel cloth and felt pads having a thickness between about 1/16 and ¼″. With such materials the minimum rate of flow can be achieved in the 6″ x 6″ bed just described in an input air pressure between about 40 and about 50 pounds per square inch. For optimum conditions and in order to assure complete fluidization it is generally desired to operate at an input air pressure somewhat in execess of 50 pounds, and a presently preferred pressure is about 100 pounds per square inch.

Employing the same developer material and using an input air pressure of 100 pounds per square inch, it has been found desirable to use between about ½ and about 5% by weight of toner or developer power in the two-component developer mixture. The presently preferred range of toner concentration is between about 1% and about 3%. Under optimum conditions it is found that the development is substantially free from background deposition, or deposition of the powder material in non-image areas, and proceeds to maximum contrast or deposition in image areas without raising a significant cloud due to the passage of air through the developer bed. When air flow of maximum amount is employed with higher toner concentraitons such as above about 2% it is generally necessary to supply dust filters or other means for controlling a dust cloud.

The present invention is particularly advantageous in small size xerographic apparatus where it is desired to keep the development apparatus and mechanism small and compact and in particular where it is desired to employ the need for circulation and recirculation of large quantities of xerographic developer. In particular, where the image surface is a wide or supporting surface of the developer hopper, and where the top surface of the bed of developer is open it has been found that high quality xerographic images can be developed and that the methods and apparatus of the present invention are peculiarly suited to the aim of developing with the constant quality of xerographic developer in a substantially fixed position.

What is claimed is:

1. A method of recording in response to an input signal corresponding to information to be recorded, comprising forming an electrostatic image on an insulating surface

corresponding to said information to be recorded, passing gas under pressure through a bed of developer material from beneath the bed, said developer material including a solid particulate carrier having finely divided electroscopic power material electrostatically coated on the carrier surface, said gas being passed through the bed of developer at a flow rate sufficient to maintain the developer in the bed in a liquid-like fluidized state, and contacting the image surface with said bed of developer suspended by said gas in said fluidized state.

2. The method of rendering visible an electrostatic image on an insulating surface of a xerographic member comprising immersing said surface in a liquid-like fluidized bed of cascade type xerographic developer maintained in a fluidized bed condition by a gas flow in said developer, said cascade type xerographic developer comprising solid particulate carrier particles and finely divided electroscopic development powder coated on the surface of said carrier.

3. The method of claim 2 in which the insulating surface is maintained developing with a substantially vertical condition while in said fluidized bed.

4. The method of rendering visible an electrostatic image on an insulating surface comprising positioning solid particulate developer material comprising carrier particles and finely divided electroscopic development powder electrostatically adhering to said carrier particles in a container and on a member which is substantially

uniformly permeable to gas and substantially impermeable to solid particles, said member presenting a resistance to a flow of gas therethrough, flowing gas upwardly through said member and into said solid particulate developer material to form said gas and said solid particulate developer material into a liquid-like fluidized suspension in said container, and contacting said electrostatic image on said insulating surface with said fluidized suspension whereby the finely divided electroscopic powder particles are selectively detached from said carrier particles and attracted to said insulating surface and deposit in configuration on said electrostatic image.

References Cited in the file of this patent

UNITED STATES PATENTS

2,297,691	Carlson	Oct. 6, 1942
2,618,551	Walkup	Nov. 18, 1952
2,618,552	Wise	Nov. 18, 1952
2,725,304	Landrigan et al.	Nov. 29, 1955
2,756,676	Steinhilper	July 31, 1956
2,817,767	Rosenthal	Dec. 24, 1957
2,824,813	Fauser et al.	Feb. 25, 1958
2,842,456	Carlson	July 8, 1958

OTHER REFERENCES

Dessauer et al.: Photographic Engineering vol. 6, No. 4, pp. 250–268 (1955).

UNITED STATES PATENT OFFICE

CERTIFICATE OF CORRECTION

Patent No. 3,008,826 November 14, 1961

George R. Mott et al.

It is hereby certified that error appears in the above numbered patent requiring correction and that the said Letters Patent should read as corrected below.

Column 6, line 4, for "chaging" read -- charging --; line 47, for "power" read -- powder --; line 56, for "concentraitons" read -- concentrations --; column 7, line 5, for "power" read -- powder --; line 21, for "developing with" read -- in --; line 22, for "in" read -- developing with --.

Signed and sealed this 17th day of July 1962.

(SEAL)
Attest:

ERNEST W. SWIDER
Attesting Officer

DAVID L. LADD
Commissioner of Patents

UNITED STATES PATENT OFFICE

CERTIFICATE OF CORRECTION

Patent No. 3,008,826 November 14, 1961

George R. Mott et al.

It is hereby certified that error appears in the above numbered patent requiring correction and that the said Letters Patent should read as corrected below.

Column 6, line 4, for "chaging" read -- charging --; line 47, for "power" read -- powder --; line 56, for "concentraitons" read -- concentrations --; column 7, line 5, for "power" read -- powder --; line 21, for "developing with" read -- in --; line 22, for "in" read -- developing with --.

Signed and sealed this 17th day of July 1962.

(SEAL)
Attest:

ERNEST W. SWIDER
Attesting Officer

DAVID L. LADD
Commissioner of Patents