Nov. 14, 1961 G. BOULET 3,008,402

MEANS FOR DISPLACING VERY LARGE AMOUNTS OF AIR

Filed Feb. 23, 1956

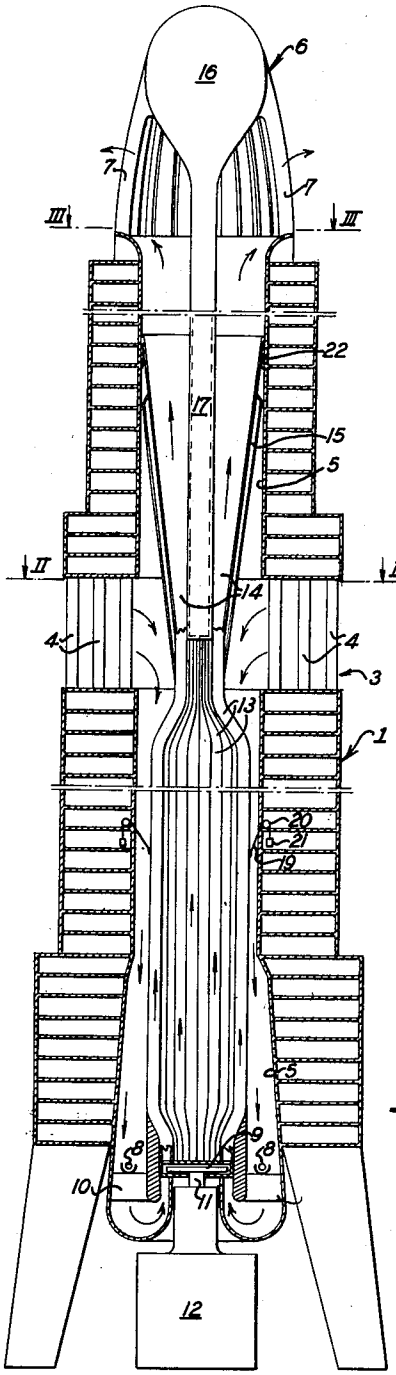

Fig-1

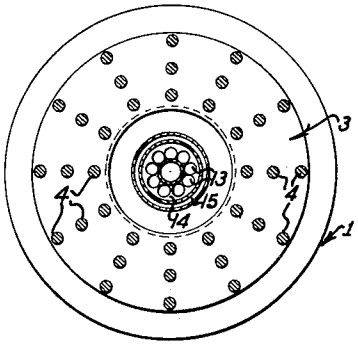

Fig-2

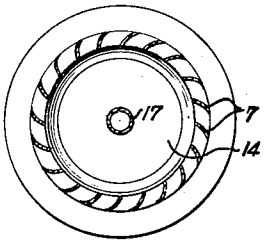

Fig-3

United States Patent Office

3,008,402

Patented Nov. 14, 1961

1

3,008,402
MEANS FOR DISPLACING VERY LARGE AMOUNTS OF AIR

Georges Boulet, Toulouse, France, assignor to Recherches Etudes Production R.E.P., Paris, France, a French company

Filed Feb. 23, 1956, Ser. No. 567,388
Claims priority, application France Feb. 25, 1955
3 Claims. (Cl. 98—33)

The object of the present invention is to provide means having a fixed position for displacing considerable quantities of air, these means being of use for various purposes which may be combined, such as ventilation, production of motive power, dissipation of stagnant zones of CO, CO_2, SO_2, dusts, or hydrocarbons in suspension, or any other suspensions over built-up areas, etc.

These means are of the thermal machine type in which there is a thermodynamic evolution of a continuous air flow through the machine (the family of machines known as gas turbines and continuous firing duct jet engines). All the machines of the above-mentioned known type were designed with a view to furnish energy. They were used either as propelling engines for vehicles or as power sources for driving such stationary machines as electric generators.

In all these cases the object was to provide machines producing with the highest possible thermal efficiency the maximum of energy for minimum weight and size. Thus the object was always to design these machines in such manner that the operating temperatures were as high as possible consistent with materials industrially available, i.e. to reduce as far as possible the air flow through the machine per unit time and, if the machine comprised a turbine, to rotate the latter at the highest possible angular velocity.

It might be said that these machines were of the class in which the ratio

$$\frac{E}{M}$$

between the energy produced and the mass of fluid in circulation from which this energy was obtained always had a high value and that consistent efforts were made to render the latter as high as possible.

The means embodying the present invention essentially differ from said known machines by the fact that they are expressly designed to operate at relatively low temperatures consistent with the use of current materials and consequently by their conception in the form of machines intended to be traversed by considerable masses of air per unit time, which results in machines in which the duct for the gaseous flow has a diameter of several meters, and, when they are intended to provide large quantities of energy, by the fact that they comprise a turbine wheel of large diameter rotating at low angular velocity. In other words, said ratio

$$\frac{E}{M}$$

always has a much lower value than in the known machines for the same value of E (or M).

In particular, it has never been proposed to use a continuous firing duct jet engine for a purpose other than propelling a vehicle. The invention, on the contrary, consists notably in a machine operating as a continuous firing duct jet machine for circulating large masses of air, for example: for ventilation purposes.

If the machine is intended to furnish large amounts of energy, it includes a large diameter turbine wheel which has a diameter of around several metres, a low angular velocity (at the most of the order of some hundreds of

2

revolutions per minute), and traversed by at least a large proportion of the total air flow through the machine. Such a machine is capable of producing considerable motive power suitable for driving any machine such as in particular electric generators which would form, with this turbine wheel, a generating station of very high power.

Structurally, the machine is distinguished also from those of the known type by the provision of a diffuser of very large size, for example at least varying from several tens of metres for the smallest up to several hundreds of metres. The diffuser is preferably disposed vertically, even if the rest of the machine has a horizontal axis, since in this manner it forms a chimney or flue so that the natural draught thereby obtained improves the efficiency of the machine.

Preferably, the thermal machine is of the type described in the U.S. Patent application No. 487,129 filed on February 9, 1955, since such a machine operates at low pressure, without need for a compressor, at relatively low temperatures and with high dilutions of the order of 6 to 20, so that, apart from other features, the turbine wheel, when the machine includes the latter, may be made of steel, preferably ordinary rustless steel, and even of light materials. The maximum temperature is of the order of 165° C. for a dilution of 20 and a heat input of 35 kcal./kg. of air and a temperature of atmospheric air of 15° C. The corresponding ratio E/M of the thermal input E in horsepower to the mass M in kilograms of flowing gas is less than 70.

In a particular arrangement, at least the duct for diffusing the gaseous flow, and preferably the whole of the duct circulating this flow, are disposed vertically and supported by a tower within which the machine is disposed, the turbine wheel, if the machine includes the latter, being then in the lower part of this tower.

This tower may be advantageously constructed in the form of a building having stories used for various purposes, for example living quarters, business offices, etc.

It is obvious that the tower may even serve as a television, radar or radio antenna support, etc.

In the case of the dissipation of the stagnant layer of dust or hydrocarbon suspensions over a built-up area, the installation comprises a tower which rises above the normal altitude of this stagnant layer, the discharge into the atmosphere being effected adjacent the upper end of the tower, that is above the layer, and the intake of the exterior air being substantially at the same level as this layer.

By way of example, to which the invention is in no way limited, an installation comprising one turbine adapted to dissipate the layer of stagnant dust above built-up areas has been shown in the accompanying drawing, wherein:

FIG. 1 is a vertical sectional view through the common axis of the turbine and its supporting tower;

FIG. 2 is a sectional view taken along line II—II of FIG. 1, and

FIG. 3 is a sectional view taken along line III—III of FIG. 1.

In this embodiment, the reference numeral 1 designates a vertical tower divided into superimposed stories in the form of a sky-scraper several hundred meters high whose central part is hollow. The shape in plan of the tower is therefore annular, the outside wall having a circular or any other shape, for example a star shape. At an altitude depending on the altitude of the stagnant layer to be dissipated, the annular part is provided with an opening so as to put the central hollow part of the tower in communication with the exterior. This open part 3 extends in this embodiment completely around the

periphery of the tower whose upper part is supported by vertical columns or posts **4** (FIGS. 1 and 2) fixed at their bases to the lower part of the tower.

The hollow central part of the tower contains a duct **5** which is applied against the annular wall of the tower and whose interior is heat insulated from the exterior. This duct forms the outer jacket of the turbine, extends axially of the tower and is provided with apertures at the level of the inlet opening **3**. This duct terminates at its upper ends in the form of a dome **6** which surmounts the tower and is provided with lateral outlet apertures or openings **7**. The general arrangement of the turbine is the same as that described in the aforementioned patent application and needs no further description. However, it should be mentioned that an oxycatalyser block **10** is disposed between the burner or heat input supply **8** and the turbine wheel **9** situated within the duct **5**. The shaft **11** of this turbine wheel extends downwardly from the duct **5**, which is closed, into a compartment **12** where it is coupled to some utilization means, not shown, such as an electric generator and the like. A nest of tubes **13**, which forms a heat exchanger, extends along the interior of the duct **5** and is traversed by the gas flow from the turbine wheel **9**. The tubes **13** communicate, substantially at the level of the air inlet openings **3**, with a diffuser **14** whose flared end has a maximum diameter corresponding to the inside diameter of the duct **5** to which it is connected in a gastight manner, for example by a circular connection **22** of the gasometer type. The part of the duct **5** extending above this connection guides the hot gases issuing from the turbine wheel whereas the lower part ducts the cold air to the turbine wheel.

The diffuser **14** has, as shown, a double wall forming a water jacket **15**. The water heated in the latter may be used for any purpose, for example for heating the stories of the tower, feeding a hot water supply, etc. For the same purpose, the upper part of the dome contains a flask or chamber **16** which is downwardly extended by a large tube extending axially and downwardly through the duct **5** and the diffuser **14** to the small-diameter portion or neck of the latter where it is connected in a gastight manner to the wall of the diffuser, for example by a gasometer connection **23** which provides a pressure-tight connection while permitting expansion. The nest of tubes **13** consists of rigid tube sections which are disposed end to end and are capable of sliding with respect to one another owing to the provision of pressure-tight sliding or flexible connections. Each tube section, and the diffuser **14**, is suspended by flexible connections **19** which are passed round pulleys **20** supported on the tower and to which are attached balancing counterweights **21** which transfer the weight of the nest of tubes to the supporting structure section by section.

As shown in FIG. 3, the outlet apertures **7**, through which the gases pass into the atmosphere, and the air inlet openings **3** may be partitioned off by guide vanes **24**. Similarly, they may also be provided with movable screens capable of partially closing in an adjustable manner these apertures, so that in the event of wind the kinetic energy of the latter may be utilized for feeding the inlet apertures under pressure, or arranging a pressure drop at the outlet, etc.

Although specific embodiments of the invention have been hereinbefore described, many modifications and changes may be made therein without departing from the scope of the invention as defined in the appended claims.

What I claim is:

1. Apparatus for moving large masses of air from a first level above the ground to a second level higher than said first level comprising a multi-story building extending upwardly from the ground to said second level, said building having an outlet opening at the top thereof and

having an inlet opening in the side thereof at said first level; a continuous flow jet engine in which the ratio E/M of the thermal input E in horsepower to the mass M in kilograms of flowing gas is less than 70; means for supporting said jet engine vertically in said building; said jet engine including a combustion zone located at the bottom of the building, a burner in said combustion zone, inlet duct means extending vertically from the combustion zone to said inlet opening in the side of the building, a turbine supported by the building near the bottom of the building and receiving the gases passing from said combustion zone, and vertically disposed outlet duct means extending from said turbine to said opening in the top of the building to discharge the gases, said outlet duct means including a diffuser portion near the upper end thereof.

2. Apparatus for moving large masses of air from a first level above the ground to a second level higher than said first level comprising a multi-story building extending upwardly from the ground to said second level, said building having an outlet opening at the top thereof and having an inlet opening in the side thereof at said first level; a continuous flow jet engine in which the ratio E/M of the thermal input E in horsepower to the mass M in kilograms of flowing gas is less than 70; means for supporting said jet engine vertically in said building; said jet engine including a combustion zone located at the bottom of the building, a burner in said combustion zone, inlet duct means extending vertically from the combustion zone to said inlet opening in the side of the building, a turbine supported by the building near the bottom of the building and receiving the gases passing from said combustion zone, and vertically disposed outlet duct means extending from said turbine to said opening in the top of the building to discharge the gases, said outlet duct means including a diffuser portion near the upper end thereof and a portion below said diffuser portion disposed in heat exchange relation with said inlet duct means.

3. Apparatus for moving large masses of air from a first level above the ground to a second level higher than said first level comprising a multi-story building extending upwardly from the ground to said second level, said building having an outlet opening at the top thereof and having an inlet opening in the side thereof at said first level; a continuous flow jet engine in which the ratio E/M of the thermal input E in horsepower to the mass M in kilograms of flowing gas is less than 70; means for supporting said jet engine vertically in said building; said jet engine including a combustion zone located at the bottom of the building, a burner in said combustion zone, a large inlet duct extending vertically from the combustion zone to said inlet opening in the side of the building, a turbine supported by the building near the bottom of the building and receiving the gases passing from said combustion zone, and vertically disposed outlet duct means extending from said turbine to said opening in the top of the building to discharge the gases, said outlet duct means including a diffuser portion near the upper end thereof and a plurality of vertical pipes below said diffuser portion disposed within said large inlet duct.

References Cited in the file of this patent

UNITED STATES PATENTS

2,109,818	Colquhoun	Mar. 7, 1938
2,538,739	Troller	Jan. 16, 1951
2,623,356	Coanda	Dec. 30, 1952
2,700,830	Wolfe	Feb. 1, 1955
2,783,613	Von Zborowski	Mar. 5, 1957

FOREIGN PATENTS

118,650	Great Britain	Sept. 12, 1918
951,942	France	Apr. 25, 1949