Nov. 7, 1961 W. H. MAVITY 3,008,118

PLUG CONTACTOR

Filed March 25, 1959

Fig. 1

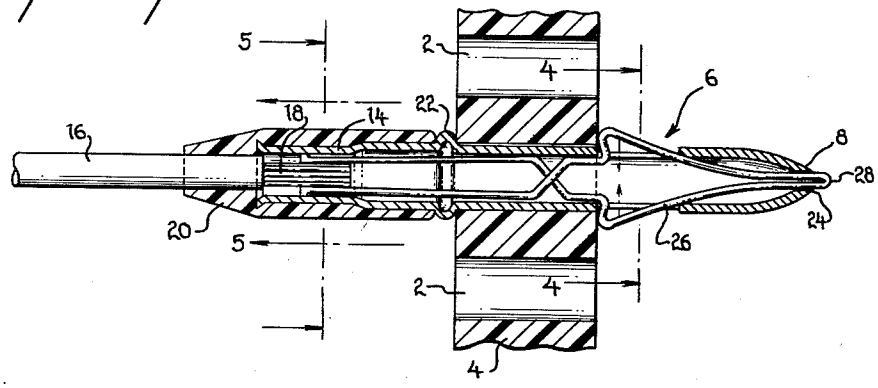

Fig. 2

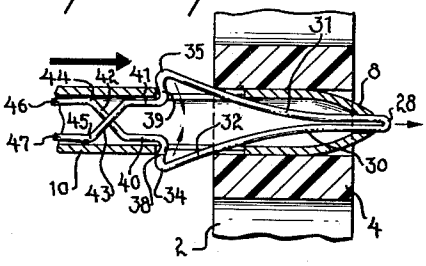

Fig. 3

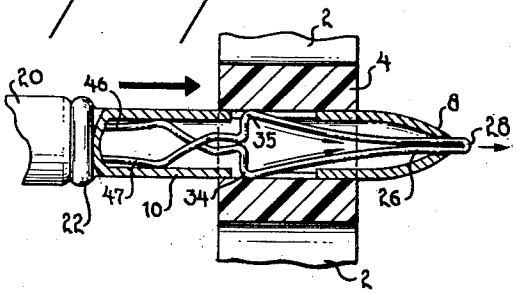

Fig. 5

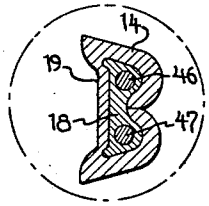

Fig. 6

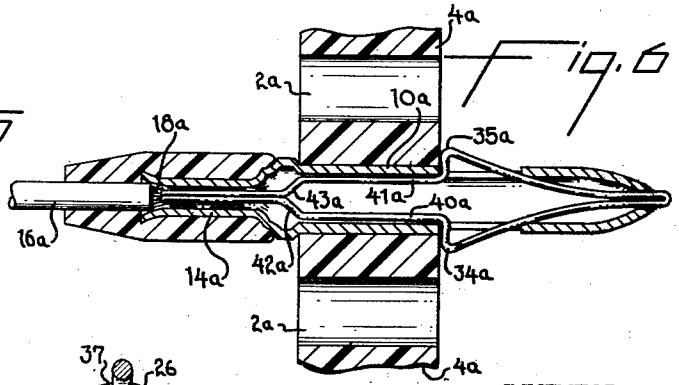

Fig. 4

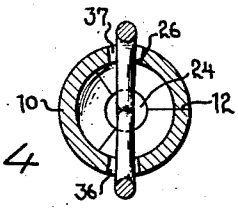

INVENTOR.
William H. Mavity
BY
Curtis, Morris & Safford

United States Patent Office

3,008,118

Patented Nov. 7, 1961

1

3,008,118
PLUG CONTACTOR

William H. Mavity, Camp Hill, Pa., assignor to AMP Incorporated, Harrisburg, Pa.

Filed Mar. 25, 1959, Ser. No. 801,944
3 Claims. (Cl. 339—217)

This invention relates to plug contactors for use with the plugboard or circuit connecting panel of an electrical calculating or accounting machine or the like, and more particularly to a spring detent system securing the plug from being pushed from the plugboard by ordinary pressures on the nose of the plug, but permitting withdrawal from the plugboard by a pull on the rear portions of the plug.

The detent systems of the prior plugs of the type described are of complex design, generally including multiple parts which are expensive in manufacture and to incorporate in assembly in the plug body. It is among the objects of the present invention to provide a spring detent system for such a plug embodied in a single piece of inexpensive material and simple design, which piece may easily and quickly be assembled in a plug body. Another object of the invention is the provision of a plug of the type described which is simple and economical in construction while being rugged in use and foolproof in operation.

Other objects and attainments of the present invention will become apparent to those skilled in the art upon a reading of the following detailed description when taken in conjunction with the drawings in which there are shown and described several illustrative embodiments of the invention; it is to be understood, however, that these embodiments are not intended to be exhaustive nor limiting of the invention but are given for purposes of illustration in order that others skilled in the art may fully understand the invention and the principles thereof and the manner of applying it in practical use so that they may modify it in various forms, each as may be best suited to the conditions of a particular use.

In the drawings:

FIGURE 1 is a longitudinal section view of an embodiment of a plug contactor incorporating features of the present invention, the plug being fully inserted in a plugboard;

FIGURE 2 is a fragmentary longitudinal section view of the plug of FIGURE 1 illustrating the action of the spring detent system during insertion of the plug in a plugboard aperture;

FIGURE 3 is a view similar to FIGURE 2 in a further stage during insertion of the plug;

FIGURE 4 is an enlarged sectional view taken along line 4—4 of FIGURE 1;

FIGURE 5 is an enlarged sectional view taken along line 5—5 of FIGURE 1; and

FIGURE 6 is a view similar to FIGURE 1 illustrating a modified form of a plug contactor.

The particular type of plug contactor to which this invention relates is especially adapted for use in the plugboard wiring system of an electrical accounting or calculating machine or the like, which system typically includes a fixed plug board carrying a set of permanent contacts arranged in rows and columns. A movable plugboard removably carrying a corresponding set of plug contactors is arranged to bring the sets of contact elements into engagement so as to complete the electrical circuits desired.

Referring now to FIGURES 1 through 5, a plurality of apertures **2** of plugboard **4** receives a set of plug contactors, such as the plug generally designated at **6**, in an array each for interengaging at its projecting nose **8**

2

a corresponding contact in the contact set of the fixed plugboard, not shown.

Plug **6** comprises a hollow cylindrical sleeve or shell **10** of a conductive metal, such as tin-plated brass, preferably rolled up from flat sheet stock into tubular form with a butt seam **12** extending longitudinally of the sleeve, FIGURE 4. At its rearward end, the left-hand end as viewed in FIGURE 1, sleeve **10** is provided with integral means **14** by which the conductor **16** is mechanically and electrically attached to the plug. Preferably attaching means **14** is formed into a ferrule from an initially U-shaped cross-section configuration, the ferrule being tightly crimped around wire core **18** of the conductor, FIGURE 5, by cold forging techniques conventional in the art as illustrated, for example, in Patent No. 2,600,012, issued June 10, 1952, to James C. Macy. To take up any metal of the ferrule in excess of that required to encompass wire core **18**, and to align the wire core more nearly coincident with the plug axis, the anvil die, not shown, utilized in forming the crimp may have a central rib to form a longitudinally extending indentation **19** in the bottom of the crimp.

An insulating sheath **20** of a suitable resin such as polyvinyl chloride preferably is molded around the rear end of the plug and adjacent portions of the insulation of conductor **16**. Sheath **20** insulates the ferrule or attaching means **14** and supports the adjacent portion of conductor **16** to increase its resistance to bending fatigue while conveniently serving as a handle for manipulating the plug.

At the rearward end of the cylindrical body of sleeve **10** adjacent the forward end of sheath **20**, an integral circumferential bead **22** is provided, the bead being disposed so as to engage the face of plugboard **4** adjacent edge portions of an aperture **2** to act as a stop for limiting movement of the plug into the plug board.

Forwardly, nose **8** smoothly converges to present a rounded tip except for a small opening **24** at the very tip in alignment with the longitudinal axis of the plug for purposes to be explained.

Disposed within sleeve **10** to provide the spring detent system of the plug is a spring **26** which is arranged to render the plug capable of being relatively easily inserted and withdrawn by sheath **20** or conductor **16**, but ordinarily incapable of being dislodged from the plugboard by forces applied to the nose of the plug except under very violent conditions where it may be preferred to lose the detent latch rather than risk extensive damage to the plug or plugboard. In general, spring **26** may be formed of any spring material of any suitable cross-sectional configuration which is resistant to crumpling on axial loading, for example, steel piano wire.

As shown in FIGURE 1, the forward portion of spring **26** is generally V-shaped, the bight **28** extending into opening **24** and presenting a smoothly rounded tip from which the legs **30** and **31** of the V extend for a short distance in closely spaced relation axially of the plug and then diverge to merge smoothly into the forward legs **32** of V-shaped ear or detent portions **34** and **35** respectively. A pair of diametrically spaced longitudinal slots **36** and **37** in the forward portion of sleeve **10**, and spaced from bead **22** a distance slightly greater than the plugboard thickness, provide openings through which detents **34** and **35** project for engaging behind the aperture edges on the front face as bead **22** comes into abutment with the rear face of the plugboard.

The rear legs **38** and **39** of detents **34** and **35** extend laterally of the longitudinal axis of the plug for substantially parallel disposition relative to the plugboard face on insertion of the plug. The ends of legs **38** and **39** lead into short segments **40** and **41** which run parallel to the plug axis and adjacent the inside wall of sleeve **10** to de-

fine with legs **30** and **31** a pair of stops for limiting the outward projection of detents **34** and **35**. From stop segments **40** and **41**, portions **42** and **43** of spring **26** cut diagonally across the inside diameter of sleeve **10** and are joined at knees **44** and **45** to legs **46** and **47** which extend rearwardly of the plug and are anchored to sleeve **10** in any suitable fashion, such as by crimping the ends thereof with wire core **18** in ferrule means **14**, FIGURES 1 and 5, so as to fix the longitudinal position of knees **44** and **45** adjacent the opposite wall of sleeve **10** from detents **34** and **35** respectively.

On assembling the plug, spring **26** is inserted through the rear of sleeve **10** until detents **34** and **35** protrude through slots **36** and **37** as bight **28** enters opening **24**, legs **30** and **31** being formed with an initial bias tending to open spring **26** slightly more than the diameter of sleeve **10** to assure protrusion of detents **34** and **35**. The ends of legs **46** and **47** are then laid along ferrule means **14**, upon which wire core **18** may be crimped therein before the molding of sheath **20** as desired.

As thus constructed and assembled, each side of spring **26** from knees **44** and **45** to bight **28** in action is similar to that of a bow spring, one end of which is anchored or fixed in position and the other end being free to slide along the plug axis in a defined path of travel which approximates the cord line of the bow that is, the line including the ends of the bow. Detents **34** and **35** are positioned at the point of greatest departure of the bow springs from their respective cord lines. For convenience in illustrating the spring action, reference will be made to one side only of spring **26**, for example, the bow spring from bight **28** to knee **44** including leg **30**, detent **34**, stop segment **40**, and diagonal portion **42**. On insertion of the plug the sloping forward leg **32** of detent **34** engages the edges of aperture **2**, FIGURE 2, to initiate a camming action tending to flatten or decrease the general curvature of the bow, ultimately resulting in the detent being fully depressed, FIGURE 3. As bead **22** engages the rear plugboard face, slot **36** passes out of aperture **2** permitting detent **34** to spring out of sleeve **10**, FIGURE 1, whereupon lateral leg **38** is positioned along the front face of the plugboard thereby latching the plug. During this action the end of the bow defined by knee **44** remains substantially fixed in position while the other end, at bight **28**, moves outwardly of opening **24** on flattening the bow, but returns to its initial position when the bow recovers on full insertion of the plug.

To withdraw the plug it is necessary only to pull rearwardly on cord **16** or sheath **20** which applies an eccentric loading to the bow spring tending to flatten it, that is, the reaction of pulling lateral leg **38** against the front face of the plugboard tends to rotate detent **34** around knee **44**. As the free end of the bow, or bight **28**, is constrained to travel axially of the plug, the loading and resultant flattening of the bow spring thus tends to depress detent **34**. Furthermore, on rotation lateral leg **38** assumes an inclined aspect to the forward edge of aperture **2** producing a camming-in force component in addition to the camming influence had by rearward movement of the forward edge of slot **36** relative to the sloping forward leg **32**, thus to depress detent **34** fully and allowing withdrawal of the plug. In this connection it will be appreciated that by varying the slope, relative to the plug axis, of legs **32** and **33**, the force required to insert the plug may be varied; and that the force required to withdraw the plug relative to the insertion force may be varied as desired by changing the length of diagonal portions **42** and **43**, or by inclining leg portions **38** and **39** more or less from perpendicular relation relative to the plug axis.

When any attempt is made to unseat the plug by pressure applied to the nose, the effect is simply to urge detents **34** and **35** more forcefully into latching engagement with the plugboard. This effect is achieved through any one of several modes of action. First, as to each bow spring defined by the sides of spring **26**, any force applied to the plug nose has a major component at the free end of the bow, or bight **28**, which acts in a direction along the cord line of the bow. Since the distal end of the bow is fixed, the only result can be a tendency to increase the curvature or buckle the bow further outwardly, which is in a direction to sustain detents **34** and **35** in latching position. Alternatively, in order for detents **34** and **35** to be depressed it is necessary that, short of complete internal collapse of the spring, bight **28** moves outwardly of opening **24**, as has been explained, which is contrary to the direction the applied force is urging it. Again, any force applied to bight **28** is directly transmitted along legs **30** and **31** to jam lateral legs **38** and **39** more tightly against the plugboard face, from which it can be seen that substantial resistance to dislodgement of the plug will be offered even where the inside ends of the spring are not anchored to the plug sleeve.

From the foregoing it will be appreciated that bight **28** need not protrude in the rest position of spring **26** from nose **8** as shown, but may be flush to the same effect. In addition, if it be assured that at least initially the edges of the plugboard aperture exert no inward camming component on the detents, as by arranging lateral legs **38** and **39** to lie parallel to the plugboard face, or to have a slight reverse inclination, adequate strength of spring **26** assures destruction of the plug or the plugboard before the plug will unseat on pressure applied to the plug nose. Under certain conditions of use, however, it may be desirable that the plug be released prior to its destruction, in which event lateral legs **38** and **39** may be slightly inclined to the plug axis as desired.

In the embodiment shown in FIGURE 6, the characteristics and configuration of the spring detent system are generally the same as that of the embodiment of FIGURE 1, like parts being correspondingly numbered but with a letter suffix. It will be noted, however, that segments **40*a*** and **41*a*** extend as far as possible rearwardly in sleeve **10*a*** along the same side of the plug as detents **34*a*** and **35*a*** respectively. Short diagonal segments **42*a*** and **43*a*** lead the ends of the spring into ferrule attaching means **14*a***.

As thus constructed, the fixed end of each bow spring merely has been transferred to the forward end of ferrule means **14*a*** and nearer the plug axis. The spring, however, is simpler to form and to insert. Further, it is essentially immaterial where segments **40*a*** and **41*a*** are caused to lie in sleeve **10*a*** upon crimping the spring ends and wire core **18*a*** in ferrule means **14*a***.

From the foregoing, it will be seen that the embodiments of the invention described in detail are comprised of a minimum number of parts which may easily and quickly be assembled in achievement of the objectives aforesaid. Other embodiments, of course, will occur to those skilled in the art. For example, it will be apparent that one side only of spring **26**, providing a single detent **34** or **35**, may be employed with good results.

I claim:

1. A plug contactor comprising a sleeve having a rounded front portion and a ferrule means at the back portion for attaching a conductor wire to the plug, an opening in said front portion substantially coaxial with the longitudinal axis of the plug and a slot in the sidewall of said sleeve, stop means on the rear portion of said sleeve for limiting movement of the contactor into a contactor-receiving aperture, and an integral detent spring disposed in said sleeve including a generally arcuate forward portion having one end disposed adjacent the sidewall of said sleeve diametrically from said slot and the other end extending into said opening, a V-shaped detent intermediate the length of said arcuate portion and biased to protrude through said slot, and a leg member extending rearwardly of said sleeve from said one end, the end of said leg member adapted to be disposed and fixed with the conductor wire in said ferrule means.

2. A plug contactor comprising a sleeve having a rounded nose, an opening in said nose substantially smaller in diameter than the sleeve and positioned coaxial with the longitudinal axis of the plug and a slot in the sidewall of said sleeve, and a wire detent spring disposed in said sleeve including a generally arcuate portion having one end extending into and slidable in said opening, the other end of said arcuate portion being disposed against the internal sidewall of the sleeve at a point along a line diametrically located relative to said slot, a V-shaped detent intermediate the length of said arcuate portion and biased to protrude through said slot, the rearward side of said detent relative to the plug nose extending substantially perpendicular to said axis, and a stop segment extending rearwardly in said sleeve integrally from said detent and engageable with the sidewall of said sleeve to limit the protrusion of said detent.

3. A plug contactor comprising a sleeve having a rounded nose, an opening in said nose substantially smaller in diameter than the sleeve and positioned coaxial with the longitudinal axis of the plug, a pair of diametric slots in the sidewalls of said sleeve, and a wire detent spring disposed in said sleeve including a generally V-shaped

forward portion with the apex of the V defining a bight extending into said opening, the legs of the V adjacent said bight being slidable in said opening, a pair of generally V-shaped detents integral with the respective legs of the V and biased to protrude through said slots, stop segments extending rearwardly in said sleeve integrally from said detents and engageable with the sidewalls of said sleeve adjacent said slots respectively to limit the protrusion of said detents, and leg segments extending rearwardly and diagonally in said sleeve integrally from said stop segments to engage the sleeve sidewalls diametrically from the slot through which the associated detents project.

References Cited in the file of this patent

UNITED STATES PATENTS

2,624,774	Cunningham	Jan. 6, 1953
2,748,367	Schelke et al.	May 29, 1956
2,787,771	Francis	Apr. 2, 1957

FOREIGN PATENTS

64,979	Denmark	Nov. 4, 1946