Oct. 10, 1961 R. E. POETHIG ET AL 3,003,325

GAS DISPENSING SYSTEM

Filed Oct. 31, 1957 4 Sheets-Sheet 1

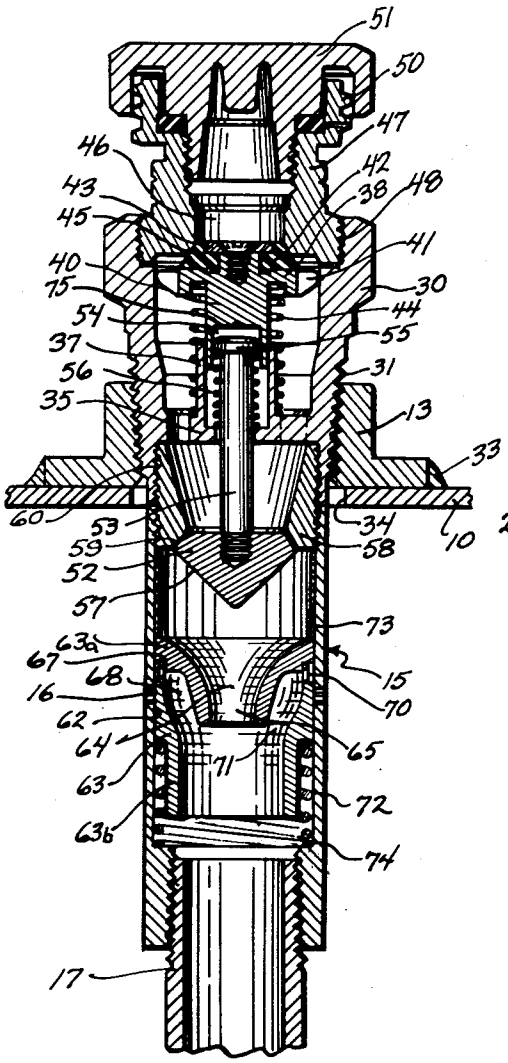

Fig. 2

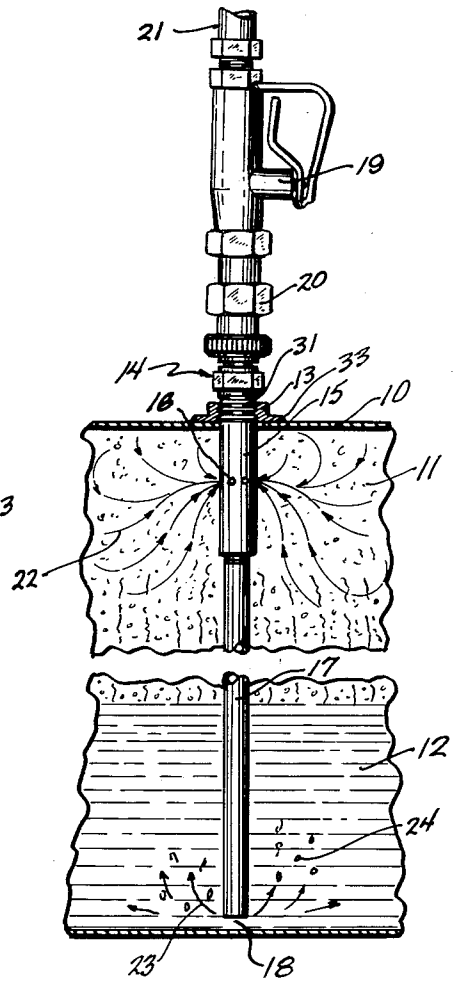

Fig. 1

INVENTORS
Robert E. Poethig &
Theodore A. St. Clair
BY
Watson W. Harbaugh
Atty.

GAS DISPENSING SYSTEM

Filed Oct. 31, 1957 4 Sheets-Sheet 2

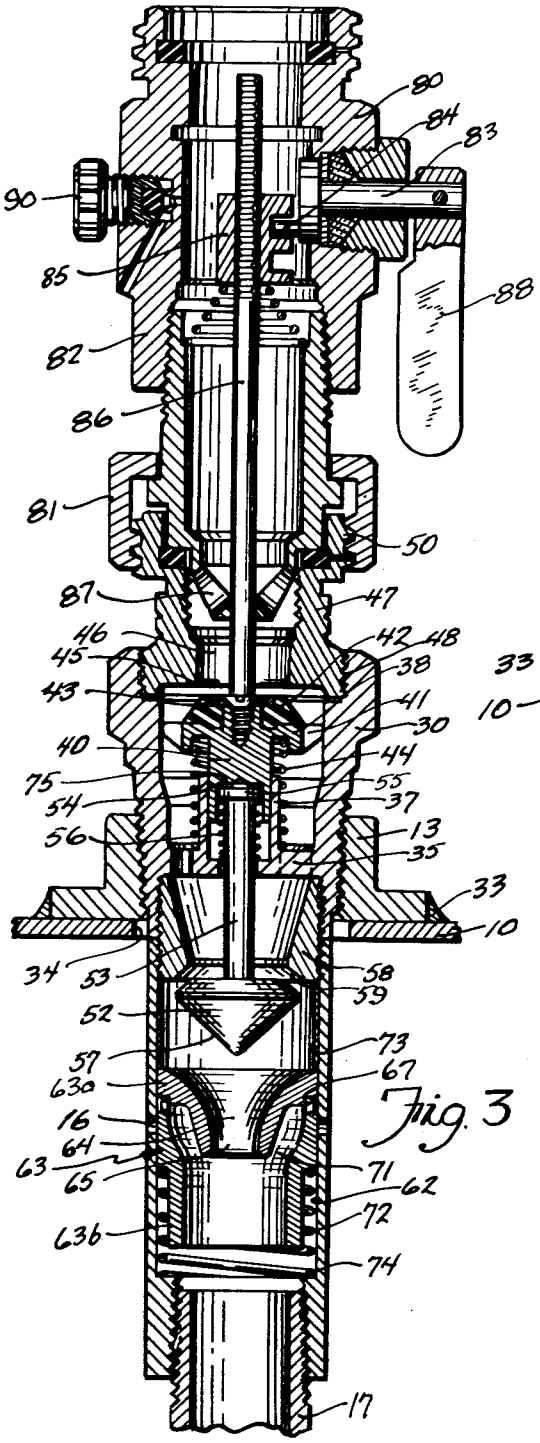

Fig. 3

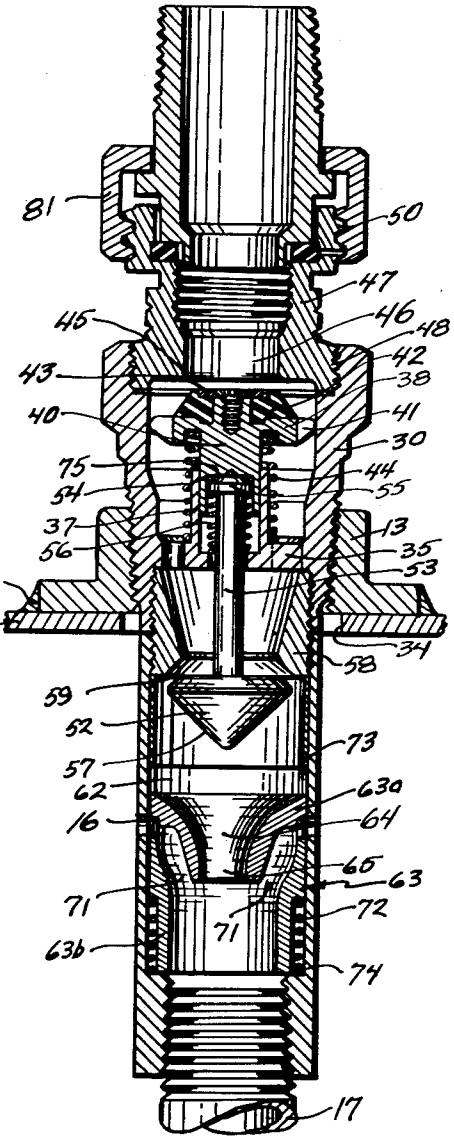

Fig. 4

INVENTOR.
Robert E. Poethig &
Theodore A. St. Clair
BY
Oraton D. Harbaugh
Atty.

GAS DISPENSING SYSTEM

Filed Oct. 31, 1957 4 Sheets-Sheet 3

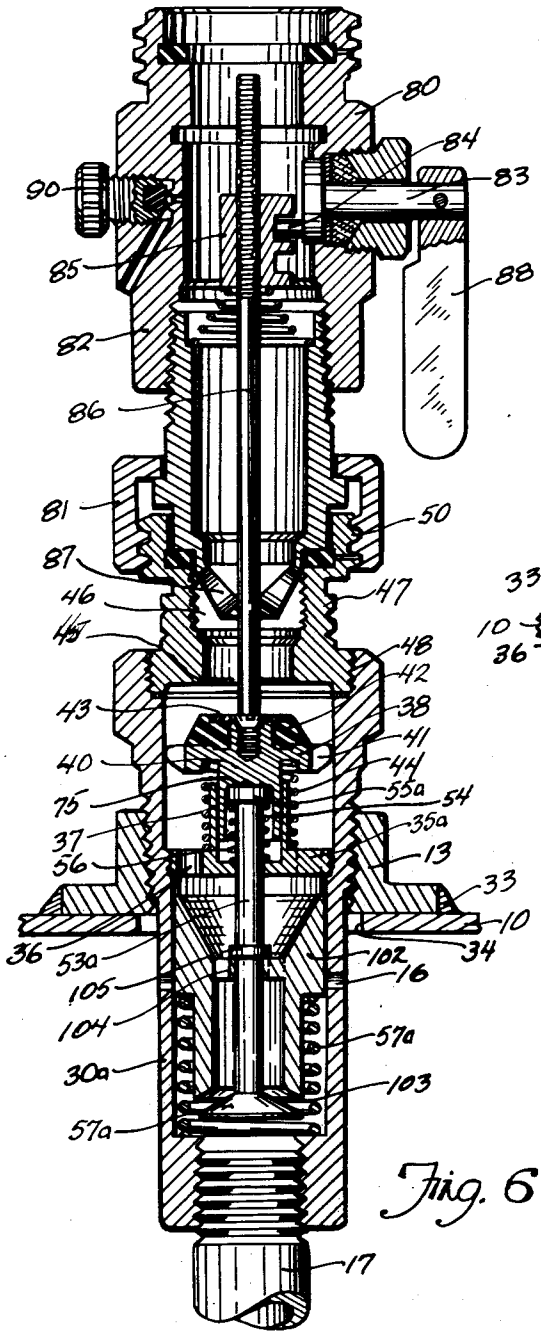

Fig. 6

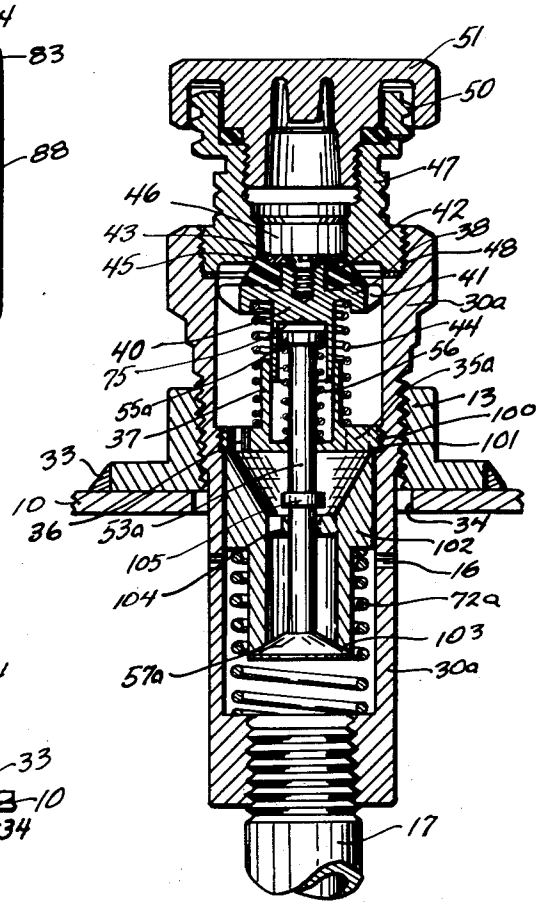

Fig. 5

INVENTORS
Robert E. Poethig &
Theodore A. St. Clair
BY
Watson D. Haubaugh
Atty.

GAS DISPENSING SYSTEM

Filed Oct. 31, 1957 4 Sheets-Sheet 4

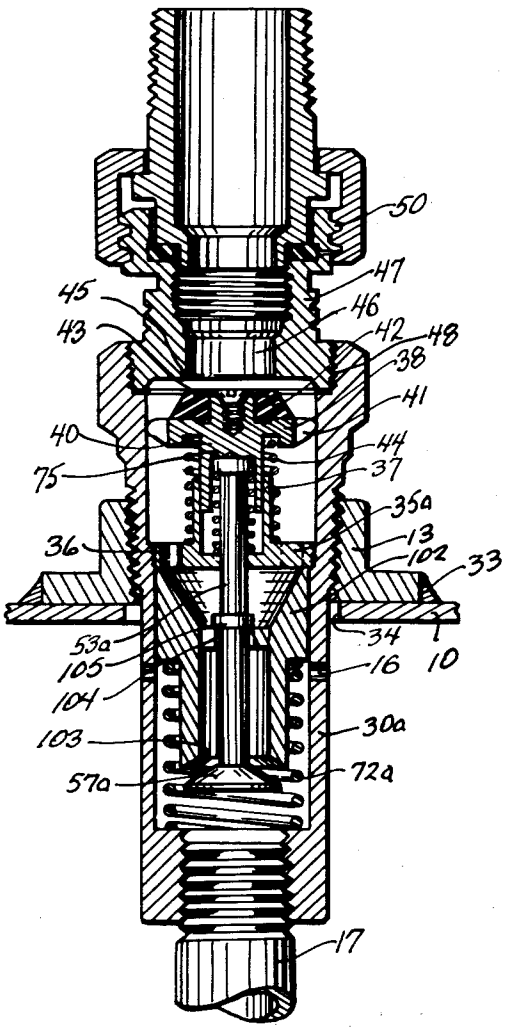

Fig. 7

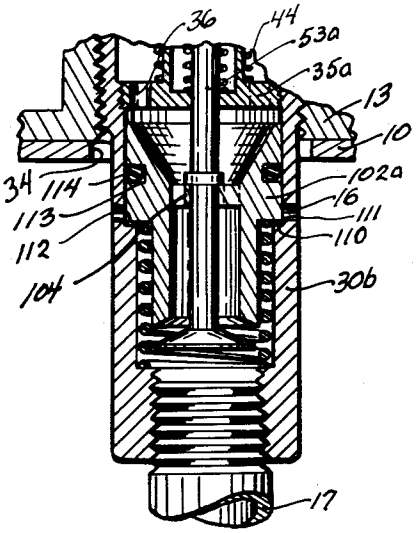

Fig. 9

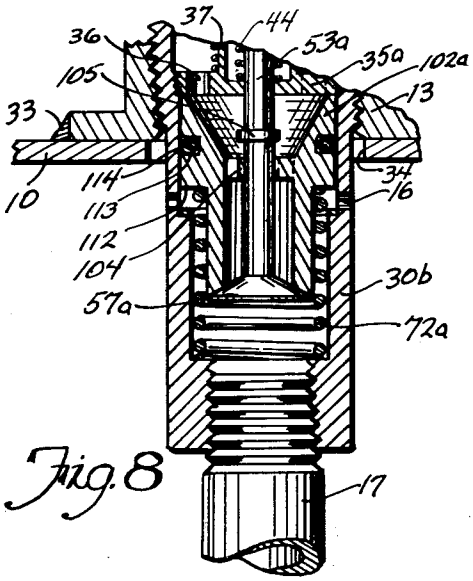

Fig. 8

INVENTORS
Robert E. Poethig &
Theodore A. St. Clair
BY
Watson D. Harbaugh
Atty.

United States Patent Office

3,003,325

Patented Oct. 10, 1961

1

3,003,325
GAS DISPENSING SYSTEM

Robert E. Poethig, Glenview, and Theodore A. St. Clair, Deerfield, Ill., assignors to The Bastian-Blessing Company, Chicago, Ill., a corporation of Illinois

Filed Oct. 31, 1957, Ser. No. 693,772
16 Claims. (Cl. 62—55)

This invention relates to liquefied gas storing and dispensing systems and valve controls and more particularly to a method and apparatus which are primarily directed to improvements in the filling and withdrawal of liquefied gas such as liquefied petroleum gas, for example, in a pressure storage tank.

When liquefied gas storage tanks have been replenished conventionally under high pump pressures with a single pipe connection to the tank, the vapor present in the tank is rapidly compressed. This is particularly true where a dip pipe is used to fill, educt and evacuate the tank. The temperature of the compressed gas also goes up and unless the compressed gas is liquefied it becomes increasingly difficult to inject replenishing fluid into the tank.

In order to condense the vapor its sensible heat must be reduced and its latent head of vaporization must be removed. Although there is some heat absorption and precipitation on the inside metal surfaces of the tank and at the surface of the body of liquid already present in the tank, this is not enough. Furthermore, stratification quickly occurs at these surfaces because of the heavy inertness of the vapor and liquid and greatly reduces heat absorption from the vapor at these points. As the result the vapor present in the tank is compressed far more rapidly than it can be liquefied and the increasing pressure decreases the efficiency of the pump and lengthens the time of filling operation.

Various attempts have been made in the past to prevent the pressure rise in a storage tank. One of these is to provide a separate line for vapor return to the replenishing tank to balance pressures between the receiving or storage tank and the supply tank. However, the amount of fuel actually delivered is difficult to compute because of the fact that there is no quick and effective way to determined just how much vapor was returned to the supply tank.

Another way has been to bleed the vapor to atmosphere during filling operations but this has been found to be highly dangerous. Still another way is to employ refrigeration equipment but this is expensive and cumbersome.

Another way is to spray the liquid into the vapor space of the storage tank and although quite satisfactory it involves extra flow controlling valves which in one way or another reduce the flow characteristics of the system due to the valve area restricting the flow passageway. In this connection reference is hereby made to application Serial No. 527,522, now Patent Number 2,813,402.

With the foregoing considerations confronting the industry, a principal object of the invention is to provide a method and apparatus by which a tank may be filled to capacity at a continuously high rate of full flow with only the connection of a filler hose to the storage tank.

A further object of the invention is to prevent any substantial increase in vapor pressure within the tank during filling operations with the liquid being introduced at full speed directly to the bottom of the tank.

A further object of the invention is to aspirate the vapor from the vapor space and intermingle it intimately with replenishing liquid to absorb the latent heat of vaporization from the vapor and return it to the tank below the liquid level therein to assure full liquefaction

2

thereof within the liquid body already present in the tank.

A further object of the invention is to displace positively and progressively the vapor present in the top of a receiving tank and to drive it into intimate contact with the liquid contents of the tank simultaneously with filling operations. The invention is further characterized by an arrangement in which vapor present in a storage tank is pumped into intimate contact with the liquid present in the storage tank during the filling operations through the same conduit by which liquid is educted from the tank.

An additional object of the invention is to provide a simple apparatus for carrying vapor into intimate contact with the liquid contents of a tank which can be received through a single opening in the tank and can also serve as an eduction conduit for liquid eduction. These being among the objects of the invention other and further objects will become apparent to those skilled in the art from the following description taken in conjunction with the accompanying drawings in which the reference characters relate to similar parts and in which:

FIG. 1 is an elevational view, in section of a tank equipped with an apparatus constructed in accordance with the present invention showing diagrammatically the action occurring during filling operations;

FIG. 2 is an enlarged vertical section of the construction shown in FIG. 1 under resting conditions;

FIG. 3 is an enlarged sectional view of the arrangement shown in FIG. 1 with the operative elements being shown in the positions they assume while liquid is being educted from the tank;

FIG. 4 is an enlarged sectional view of the construction shown in FIG. 1 with the operative elements shown in the respective positions which they assume under the filling operations depicted in FIG. 1;

FIGS. 5, 6 and 7 are enlarged vertical sections of a modification of the invention used as shown in FIG. 1, FIG. 5 shows the resting condition thereof, FIG. 6 shows the operative elements in the positions which they assume during liquid eduction, and FIG. 7 the operative elements in the positions they assume under filling operation;

FIGS. 8 and 9 disclose another embodiment of the invention in which the dip pipe conduit is completely and positively sealed from the aspiration ports during liquid eduction, FIG. 8 showing the operative elements in their resting positions and FIG. 9 showing the operative elements in the positions they assume under liquid eduction.

The invention contemplates, in general, a combination liquid fill and liquid eduction dip pipe or tube having openings near the top of a storage tank and a venturi member slidable in a compartment in the tube to open and close these openings depending upon the direction of the flow of liquid through the tube. When the replenishing liquid is being driven into the tank the openings are placed in communication with the throat of the venturi so that vapor is aspirated from the top of the tank to mix with the liquid beyond the venturi opening and be carried thereby to the bottom of the tube where it is carried into the liquid already present in the tank to assure its liquefaction. The tube is mounted upon fittings in communication with valve arrangements such as those shown in said application and includes a modification in which the lowermost of two filler valves when present may be contoured to accentuate the venturi action or may be so constructed and arranged as to cooperate with the venturi member in its operation.

In FIG. 1 a tank **10** is shown in which liquefied petroleum gas is stored in its vapor phase at the top thereof as at **11** and in its liquid phase at the bottom thereof as

at 12. A threaded flange 13 welded to the tank over a tank opening 34 provides an opening into which is threaded a filler valve fitting 14 which is representative of any one of a number of types of tank fittings employing filler valves as well as dispensing valves. Depending from the fitting is a dip tube comprising an upper housing 15 having lateral openings 16 therein and a pipe 17 connected to the bottom of the housing and extending downwardly to a point adjacent to the bottom of the tank as indicated at 18. To the outer end of the fitting is connected a fil valve 19 and a hose coupling 20 carrying a filler hose 21 through which liquefied petroleum gas is supplied in its liquid phase and is driven by pump pressure into the fitting 14 and down the dip tube 17 into the tank 10.

Also shown in FIG. 1 is the action of the vapor and the liquid as represented by arrows 22 and 23 along the vapor bubbles 24. With the embodiments herein described vapor 11 is drawn into the openings 16 from the tank as indicated by arrows 22 by a venturi action taking place inside of the housing 15. The vapor thus aspirated is mixed with the incoming liquid and is at least partially liquefied and passes down the pipe 17 to the bottom from which it flows outwardly into the tank again as indicated by arrows 23. If any vapor remains it bubbles upwardly through the liquid 12 as indicated by vapor bubbles 24 and is liquefied thereby before it reaches the surface of the liquid 12.

The details of construction of the filler valve and venturi arrangement of FIG. 1 is shown in FIGS. 2, 3 and 4 wherein the fitting comprises a body 30 externally threaded as at 31 to be received in sealed relationship in the flange 13 which in turn is welded as at 33 to the tank 10 around the tank opening 34. Integrally formed with the body 30 is a spider 35 having flow passages 36 therethrough surrounding a central portion that is elongated to provide a cylindrical wall 37 which serves both as a guide and a mounting for the two axially spaced filler valves employed in the fitting.

The outermost filler valve 38 has a cylindrical stem 40 received in guided relationship in the cylindrical wall 37 and is cut away around the periphery thereof as at 41 for the free flow of liquid therepast between the valve and the wall of the body 30. The upper end of the valve 38 is provided with a valve seat 42 held in place by a nut and washer assembly 43. A retainer body 47 is threaded into the upper opening in the valve body as at 48 and at its lower end has a seat 45 formed at the lower end of a passage 46 therethrough. A spring 44 resting at one end against the spider 35 urges the valve 38 upwardly against the seat 45 to provide a normally closed filler valve controlling the flow of liquid into and out of the body 30. The upper end 50 of the retainer body is provided with an Acme-type thread and adapted to receive in sealed relationship a hose coupling 20. Normally the filler valve (FIG. 2) is closed to atmosphere at the top by a closure cap 51 threaded into the coupling 47.

The lower valve 52 is threaded to a bolt-like stem 53 having a head 55 received in a cavity 54 provided for it at the bottom of stem 40 of the valve 38. The head 55 is forced upwardly by a spring 56 disposed between the head and the bottom wall of the cylinder 37 or spider 35 to urge the valve 52 to a normally closed position against the valve seat 59 formed on the lower end of a male coupling 58 with enough lost motion between the head 55 and the stem 40 to permit both valves to close freely. The coupling 58 is threaded for an upper portion of its length into the bottom of the valve body 30 as at 60 and the lower end of the male coupling has threaded thereon the housing 15 in supported relationship. Preferably the lower end of the valve member 57 is tapered downwardly as indicated to provide a partial flow control contour for liquid passing around it and into the housing 15.

The interior of the housing 15 has a cylindrical wall 62 in which is slidably mounted a venturi element 63 preferably made of two parts, namely, an upper element 63*a* and a lower element 63*b*. The upper element 63*a* has a tapering throat 64 terminating in a partially reduced diameter 65 as disposed within the confines of the lower element 63*b*. The tapered portion 64 provides a nozzle or venturi throat through which liquid is forced downwardly from the filler valve body 30. The lower element may move separately but preferably is welded to the upper element as at 67 to provide a passageway 68 between the venturi throat 64 and the outer wall of the lower element 63*b* which has castellations or holes 70 located between the two elements that open upon the cylindrical wall 62 of the housing 15. The passageway 68 communicates as at 71 at an angle to the path of flow of liquid being injected through the filler body. Liquid thus flowing through the nozzle 64 creates a vacuum or a partial vacuum condition in the area 71 and passageway 68 to draw vapor 11 from the tank 10. A spring 72 surrounding the lower end of the lower element 63*b* urges the venturi element 63 against a stop 73 which is located as by brazing at a point where the openings 16 through the wall of the housing are located below and out of communication with the castellations 70 when the venturi element is resting against the stop 73. The lower end of the spring 72 is held in place by a shoulder 74 above the upper end of the pipe 17 and thus being under a compression only enough to normally urge the venturi member upwardly yields to permit the downward movement of the venturi member 63 when liquid is being forced through the nozzle 64. The downward movement of the venturi element is limited by the shoulder 74 also and at a predetermined point where the castellations 70 are in communication with the openings 16.

In operation when a filler hose 21 is secured to the filler valve 30 as shown in FIG. 4 and the liquefied gas is forced to flow inwardly to the tank in its liquid phase the injection pressure opens the upper valve 38 which in turn engages as at 74 the upper end of the stem 53 and positively displaces the lower valve 57 to its open position and both valves are held open by the inrushing liquid. The force of this liquid forces the venturi member down as shown in FIG. 4 and the partial vacuum generated at 71 aspirates the vapor from the top of the tank, mixes it with the liquid and carries it downwardly through the pipe 17, absorbs some of the latent heat of vaporization to liquefy the vapor and carries that which is not liquefied into the body of liquid 12 where full liquefaction of the aspirated vapor is assured.

Once the flow of the replenishing liquid into the tank is terminated the valves and the venturi element resume the positions shown in FIG. 2.

In the event, however, it is desired to withdraw liquid from the tank then an evacuation attachment or insert is connected between the hose and the filler valve as indicated in FIG. 3 wherein an insert or fitting 80 is fastened to the hose at the upper end by means of a coupling (not shown) and to the filler valve at the bottom end thereof by a coupling 81.

The evacuation insert or fitting 80 comprises a body 82 in which a shaft 83 is rotatably mounted to carry a crank 84 on the inner end thereof which operates in a crosshead 85 to reciprocate a pushrod 86 whose lower end extends outwardly beyond an aperture nozzle portion 87. A lever handle 88 operates the shaft 83 to move the pushrod 86 upwardly to a position permitting the closure of the filler valves and downwardly to a position positively displacing the valves to open them as though there were liquid being forced into the tank as already described. When thus opened the valves permit liquid to flow from the bottom of the storage tank 10 outwardly through the pipe 17, through the venturi element 63, the two valves, the evacuation fitting 80 and into the hose 21. With this flow, however, the spring 72

forces the venturi element upwardly whereby the openings **16** are closed so that vapor will not be entrained at the same time that the liquid is being educted.

A substantial volume of liquefied petroleum gas remains in the valve fitting **82** after filling operation has been completed and the filler valves returned to closed position by the handle **88**. Consequently a bleed valve **90** is provided as shown to vent the evacuation fitting of dangerous pressures before loosening the union nut **81**.

In the remaining FIGS. 5 to 9, modifications are shown in which the lower check valve of the filler valve assembly cooperates with the opening at the bottom of the venturi element as a valve seat. In these embodiments the aspiration ports are normally open and the venturi element is positively displaced to close same when the filler valves are positively opened by the evacuation fitting operated for that purpose when the tank is being evacuated.

In FIGS. 5 to 7 the body **30***a* is an integral one down to the pipe **17** and is threaded at **100** to receive the spider **35***a* therein to serve as a stop **101** for the upper limit of movement of the venturi element **102** as well as carry the stems of the filler valves **38** and **57***a* in guided relationship. The venturi element **102** is machined at its lower end as at **103** to form a valve seat and thereabove is provided with a spider **104** which serves as a combination guide for the valve stem and stop for controlling the position of the venturi member. The stem **53***a* of the lower filler valve **57***a* is elongated to extend down through the spider **104** of the venturi member to carry the valve **57***a* and operate same with respect to the valve seat **103**.

A collar **105** is located upon the stem above the spider **104** so that positive downward movement of either the valve **57***a* or valve stem **53***a* causes the collar to engage the spider **104** and carry the venturi member **102** downwardly against the effort of the compression spring **72***a* for the purpose of closing the aspiration ports **16** if a movement of the stem **53***a* exceeds the mere opening of the valve **57***a* that occurs during filling operations. In this connection it is to be noted that a lost motion between the spider **104** and the collar **105** is provided which is enough to permit the valve **57***a* to open sufficiently for filling operations without closing the ports **16**. The flow of the liquid out of the valve seat **103** around the valve **57***a* aspirates vapor from the tank into the valve compartment of the housing where it is mixed with the incoming liquid and carried down through the pipe **17** and back to the tank as liquid. Such a position of valve is shown in FIG. 7 where the embodiment disclosed is shown coupled with a filler hose coupling.

In FIG. 6, however, where it is desired to withdraw liquid from the tank the evacuation coupling **82** is attached as already described, and the pushrod **86** actuated downwardly to displace the filler valves downwardly a distance in excess of the filler opening of the valve **57***a*. The stop **105** engages the spider **104** and carries the venturi member to a position closing the ports **16** to prevent vapor from being entrained in the liquid being withdrawn from the tank.

Considering now FIGS. 8 and 9 it will be appreciated that in the manufacture of the valves described manufacturing tolerances would be maintained which would permit a certain amount of looseness between the venturi element and the wall of the housing in which it slides. These will permit some vapor in the top of the tank to seep through the openings **16** and be entrained in liquid being evacuated from the tank. However, if such is objectionable with some pumping or service conditions the embodiment illustrated in FIGS. 8 and 9 may be employed wherein the housing **30***b* is provided with a shoulder **110** just below the openings **16** and a sealing washer **111** is disposed thereon to engage a shoulder **112** on the venturi member **102***a* in sealed relationship. Furthermore, a circumferential groove **113** is provided upon the venturi member **102***a* above the openings **16** and in

this groove is mounted an O-ring **114** made of a resilient elastomer which provides a sealing relationship with the inner wall of the housing **30***b*. In FIG. 8 where the position of the parts are shown in a resting condition the openings **16** are in communication with the interior of the housing **30***b*, the venturi member being urged upwardly away from the sealing relationship at the shoulder **110** to provide for aspiration of vapor. The venturi member will remain in this position under the effort of the spring **72***a* during resting conditions and also during filling operations at which time the valve **57***a* would assume the position illustrated in FIG. 7 where the flow of incoming liquid aspirates vapor from the interior of the tank through the openings **16**.

In the event liquid is to be evacuated from the tank as when an evacuation fitting **82** is employed as already described, the relative positions of the elements are shown in FIG. 9 in which the contact made by the shoulders **112** and **110** upon opposite sides of the sealing ring **111** seals the openings **16** from the interior of the chamber on one side and in the O-ring **114** located above the openings **16** seals the openings from the interior on the other side. With this arrangement no vapor can seep into the liquid being educted from the tank.

In order to explain the invention only a filler valve type fitting has been shown in connection with the venturi member and its function. Other types may embody the venturi member. In the event a type is used which has other valved outlets for liquid withdrawal purposes it will be apparent that the space between the valve **57** and the venturi element **63** in FIG. 2 need only be open for this purpose. Such an arrangement would involve a valve fitting such as that disclosed in said application in which the filler valves are located in the valve housing body above a service conduit outlet and the venturi would be located in a housing either integral with or attached to the main housing where it is located below a service outlet.

Furthermore, it will be readily apparent to those skilled in the art that various and further modifications could be made in the devices disclosed which embody the invention without departing from the scope of the invention which is commensurate with the appended claims.

What is claimed is:

1. In combination, a tank for storing liquefied gas under its vapor pressure and flow control means mounted in sealed relationship at an opening in the tank for filling and educting liquefied gas from the tank through a single conduit comprising a filler valve, an aspirating device and a dip tube extending to a point adjacent the bottom of the tank, said device including a housing interconnecting the filler valve and dip tube and having a central passage therein forming a part of said conduit in communication at its top with said filler valve and at its bottom with the dip tube and having a laterally opening port in the side thereof intermediate its top and bottom in communication with the tank near the top thereof, venturi means in said passage including a member mounted in said housing for relative axial movement with respect thereto and having a venturi throat in communication with said filler valve and said dip tube, said member defining in part a passageway in communication with said throat on the side thereof adjacent to said dip tube, an upper stop means and a lower stop means for limiting said relative movement between a position closing said port and a position opening said port to said passageway, said member and housing being disposed in said port opening position during the flow of replenishing liquefied gas in said passage entering from said filler valve, and means normally urging said member in a direction opposing the flow of replenishing liquefied gas.

2. In combination, a tank for storing liquefied gas under its vapor pressure and flow control means mounted in sealed relationship at an opening in the tank for filling and withdrawing liquefied gas from the tank through a single conduit comprising a filler valve, an aspirating de-

vice and a dip tube extending to a point adjacent the bottom of the tank, said device including a housing interconnecting the filler valve and dip tube and having a central passage therein in communication at its top with said filler valve and at its bottom with the dip tube and having a laterally opening port in the side thereof intermediate its top and bottom in communication with the tank near the top thereof, venturi means including a member mounted in said housing for relative axial movement with respect thereto and having a venturi throat in communication with said filler valve and said dip tube and defining in part a passageway in communication with said throat on the low pressure side thereof adjacent to said dip tube, an upper stop means and a lower stop means for limiting said relative movement between a position closing said port and a position opening said port to said passageway, and means normally urging said member in a direction opening said port, said member and housing being disposed in said port opening position during the flow of replenishing liquefied gas in said passage entering from said filler valve.

3. In combination, a tank for storing liquefied gas under pressure, a filler valve mounted at an opening in the tank, and a device for filling and educting liquid from said tank, said device comprising housing means communicating with the filler valve, a central passage in said housing means, one end of said passage forming an inlet connected to said filler valve for the introduction of replenishing liquefied gas under pressure into said tnak and the other end forming an opening spaced from said inlet, a dip pipe communicating with said opening and extending to a point adjacent to the bottom of the tank to place said passage in communication with said tank, said housing means having a horizontally directed radial port formed in the side thereof intermediate said inlet and said opening, means slidably mounted in said housing means for relative axial movement with respect thereto to open and close said radial port including a venturi member, an upper stop means and a lower stop means on said housing means for limiting said relative movement between a position closing said radial port and a position opening said radial port, said slidable means and housing means cooperating to close said port under pressure of withdrawn liquefied gas entering said passage through said opening, and means normally urging said slidable member and housing means into their relative position normally closing said port.

4. For use in combination with a tank for storing liquefied gas under pressure, a valve assembly for liquefying vapor within the storage tank during the filling of said tank with liquefied gas under pressure comprising a plurality of tubular members slidably mounted one within the other for relative axial movement therebetween and defining a flow passage axially therethrough, one of the members defining an inside wall upon which the other one slides, one end of the passage defining an inlet opening for liquefied gas entering the tank, the other end defining an outlet opening, a dip tube connected to said outlet opening and extending to a point adjacent to the bottom of the tank, the outside one of said members having a port therein intermediate said openings, an upper stop means and a lower stop means on said outside member upon opposite sides of said port for limiting movement of the inner one of said members from a normal relative position in which said port is opened by said inner member to another relative position in which the port is covered by said inner member, an element defining a venturi throat interconnecting said openings and a valve seat facing said outlet opening, conduit means for interconnecting said throat and port when said port is open, a spider carried by one of the members having a co-axial bore and a plurality of openings therearound formed therein for permitting flow of fluid through the passage, a stem axially slidable in said bore, a valve disc fixed on the lower end of the stem adjacent to the outlet opening to close against said valve seat, spring means urging closure of said valve disc, spring means urging relative movement of said members in a direction opening said port, and a dip tube secured to said external member to connect the outlet opening to a point adjacent to the bottom of the tank, the fluid pressure of replenishing fluid entering the passage from the inlet holding said disc away from contact with said valve seat and the fluid pressure of outgoing fluid as urging said disc against said valve seat and said members to their said normal position.

5. In a liquefied gas storing and dispensing system, a tank for storing liquefied gas under pressure and having a valve receiving opening in a wall thereof, and a dip tube extending to a point adjacent the bottom thereof, a combination filler and eduction valve assembly mounted in said opening and connected to said dip tube for liquefying vapor in the tank during filling thereof with liquefied gas comprising an elongated housing, a central passage in said housing, one end of said housing forming an inlet for said passage to receive replenishing liquefied gas introduced under pressure and the other end of said housing forming an outlet to said passage from said tank through said dip tube, a plurality of circumferentially spaced radial ports adjacent said inlet formed in said housing near the top of the tank, a venturi element in said passage having a throat interconnecting said openings disposed in sealing contact with said housing above said ports, and means slidably mounted in said passage for movement in said passage in a direction opening said ports for communication with said passage at a point proximate to said throat on the side thereof adjacent to said outlet, and spring means normally urging the last said means to a position closing said ports.

6. In combination, a tank for storing liquefied gas under pressure, a filler and flow control valve assembly mounted at an opening in said tank comprising a housing carrying a dip tube extending to a point adjacent the bottom of the tank, a central passage formed in said housing, said housing being formed with a plurality of circumferentially spaced ports, means mounted within said passage for closing said ports and having a venturi throat dividing said passage into two zones, said one of said zones being in communication with one end of said housing to receive replenishing fluid and the other of said zones being in communication at the other end of said housing with a point near the bottom of the tank through said dip tube to receive liquid educted from the tank, said ports opening into said one of said zones near the top of the vessel, a check valve in said passage opening in the direction of flow of replenishing fluid through said passage, said means including a slidable element disposed within said housing for relative movement in said housing to effect opening of said ports when the pressure in said one zone is greater than the pressure in said other zone, a spring normally moving said element to open said ports, and means actuated by said check valve, upon the opening of said valve for actuating the first mentioned means to close said ports when said valve is opened a predetermined distance.

7. In a liquefied gas storing and dispensing system a tank for storing liquefied gas under pressure and a spray filler and eduction valve assembly mounted on said tank, said valve assembly comprising a housing, a central passage formed in said housing opening outside of the tank at one end and at a point adjacent the bottom of the tank at the other end, a filler valve disposed within said passage adjacent said outside opening and adapted to be opened by the pressure of inflowing replenishing liquid to afford flow of the liquid therearound and into an inlet zone, a radial port through the wall of the housing, a venturi member slidably disposed within said passage and movable to close said ports, said venturi member having a venturi throat and a passage leading thereto including an opening registering with said port when liquid under pressure is introduced into said passage through said inlet, said venturi member receiving a stem, a spring normally urging said stem to carry said opening of the

venturi member into register with said port to open the port, a check valve carried by the venturi member at the lower end of said stem for cooperation with a seat formed in the bottom wall of said venturi member whereby upon the manual displacement of said stem and said check valve the venturi member and check valve are separated and the ports closed to provide a path therethrough for educting liquefied gas from the tank.

8. A valve assembly for mounting in a fluid passage comprising a tubular housing having a flow passage extending axially therethrough and defining an inside wall for the housing, one end of the passage defining an inlet, the other end of the passage defining an outlet opening, said housing having a port through the side of the housing intermediate said inlet and outlet openings, a sleeve axially slidable in said passage and being of sufficient axial length to cover said port and having a throat therethrough of reduced diameter, conduit means for connecting said port in communication with said throat adjacent said outlet opening, check valve means including a valve seat element on said sleeve facing said outlet opening and a valve element engaging said valve seat element and movable in the direction of said inlet opening to close against said seat, spring means for urging said valve element to said closed position, spring means for urging said sleeve to a position opening said outlet port, filler valve means in said inlet opening, and means interengaging said valve means for displacing said valve element to open said check valve means when said filler valve means is open, and means limiting movement of said valve element and the sleeve in the direction of said outlet opening to a position closing said port.

9. A valve assembly for mounting in a fluid passage and comprising a filler and a vapor condensing device, said device including a housing, a filler valve in said housing, said housing having a chamber in communication with the filler valve at one end and defining an opening at the other end, said housing having a port through a side wall of the chamber, venturi means in said chamber having a throat in communication with said filler valve and said opening and a passage interconnecting said port and said throat at a point adjacent to said opening, means slidable in said housing for closing said port actuated by said filler valve when opened a predetermined distance.

10. A valve assembly for mounting in a fluid passage comprising a tubular housing defining an elongated flow passage one end defining an inlet opening and the other end an outlet opening, an aspiration port through the side of said tubular housing intermediate its ends, a venturi sleeve axially slidable in said passage for movement between positions opening and closing said aspiration port and having a venturi throat therethrough for providing communication between said inlet and outlet openings, shoulder means on the housing above said outlet opening defining a stop determining the port closing position of the sleeve, means for urging said sleeve into engagement with said shoulder, and conduit means for interconnecting said port with said throat at the end thereof adjacent to said outlet opening when said sleeve is in the position of opening said port.

11. A valve assembly for mounting in a fluid passage comprising a tubular housing defining an elongated flow passage one end defining an inlet opening and the other end an outlet opening, an aspiration port through the side of said tubular housing intermediate its ends, conduit means in said passage including a sleeve in said passage having a venturi throat therethrough for providing communication between said inlet and outlet openings and a second sleeve axially slidable in said passage for movement between positions opening and closing said aspiration port and defining with the first sleeve an aspiration passage interconnecting said port with said throat at the end thereof adjacent to said outlet opening when said second sleeve is in a position of opening said port, shoulder means on the housing above said outlet opening defining a stop determining the port opening position of the second sleeve, and means for urging said sleeve into engagement with said shoulder for placing said aspiration port and aspiration passage in communication with each other.

12. A valve assembly comprising a tubular housing defining an elongated flow passage one end defining an inlet opening and the other end an outlet opening, an aspiration port through the side of said tubular housing intermediate its ends, a sleeve axially slidable in said passage for movement between positions opening and closing said aspiration port and having a venturi throat therethrough for providing communication between said inlet and outlet openings, shoulder means on the housing above said outlet opening defining a stop determining the port opening position of the sleeve, means for urging said sleeve into engagement with said shoulder, conduit means for interconnecting said port with said throat at the end thereof adjacent to said outlet opening when said sleeve is in the position of opening said port, a valve seat element carried by said slidable sleeve, a valve stem extending through said throat towards said inlet opening and carrying a valve cooperating with said valve seat element, and resilient means urging said stem to close said valve.

13. A valve assembly for mounting in a fluid passage comprising a tubular housing of two tubular members interconnected by a coupling member and defining an elongated flow passage one end defining an inlet opening and the other end an outlet opening, an aspiration port through the side of said tubular housing intermediate its ends on the outlet opening side of said coupling member, a sleeve axially slidable in said passage for movement between positions opening and closing said aspiration port and having a venturi throat therethrough for providing communication between said inlet and outlet openings, shoulder means on the coupling member above said outlet opening defining a stop determining the port closing position of the sleeve, means for urging said sleeve into engagement with said shoulder, and conduit means for interconnecting said port with said throat at the end thereof adjacent to said outlet opening when said sleeve is in the position of opening said port, said coupling member terminating at the bottom in a valve seat member, and a filler valve element cooperating with said valve seat.

14. A valve assembly comprising a tubular housing defining an elongated flow passage one end defining an inlet opening and the other end an outlet opening, an aspiration port through the side of said tubular housing intermediate its ends, a sleeve axially slidable in said passage for movement between positions opening and closing said aspiration port, conduit means in the passage having an aspiration inducing throat therethrough for providing communication between said inlet and outlet openings, shoulder means on the housing defining a stop determining the port opening position of the sleeve, means for urging said sleeve into engagement with said shoulder, means for interconnecting said port with said throat at the end thereof adjacent to said outlet opening when said sleeve is in the position of opening said port, a valve seat element carried by said slidable sleeve, a valve stem extending through said throat towards said inlet opening and carrying a valve cooperating with said valve seat element, resilient means urging said stem to close said valve, a stop means on said valve stem engaging said sleeve for moving said sleeve against said sleeve urging means to close said port and open said valve against said resilient means.

15. A valve assembly comprising a tubular housing defining an elongated flow passage one end defining an inlet opening and the other end an outlet opening, an aspiration port through the side of said tubular housing intermediate its ends, a sleeve freely slidable in said passage for movement between positions opening and closing said aspiration port, aspiration means having a throat for pro-

viding communication between said inlet and outlet openings, stop means on the housing determining the port opening position of the sleeve, means for urging said sleeve into engagement with said stop means, conduit means for interconnecting said port with said throat at the end thereof adjacent to said outlet opening when said sleeve is in the position of opening said port, means for moving said sleeve to its position closing said port, and means between said sleeve and housing on opposite sides of said port for sealing said port from the flow passage when said sleeve is in a position closing said port.

16. A valve assembly for mounting in a fluid passage and comprising a filler valve and a vapor condensing device, said device including a housing having a chamber in communication with the filler valve at one end and defining an opening at the other end for said chamber, said housing having a port through a side wall of the chamber, a sleeve member slidably mounted in said chamber to move from a position uncovering said port towards said opening to a position covering said port, means urging said member towards said filler valve to uncover said port and including a stop element located on one side

of said port, means for obstructing the flow of fluid through said sleeve including a valve element and a valve seat element in said housing one of which is carried by said member and the other of which is moved towards said opening by said filler valve, said other element having a lost motion stop element engaging said member to displace it towards said opening to close said port, said other element being movable towards said filler valve to engage said one valve element when said port is uncovered.

References Cited in the file of this patent

UNITED STATES PATENTS

571,692	Schneible	Nov. 17, 1896
1,421,840	Schmidt	July 4, 1922
1,421,845	Schmidt	July 4, 1922
2,574,022	Dahl	Nov. 6, 1951
2,784,561	Postlewait	Mar. 12, 1957
2,802,492	Gosselin	Aug. 13, 1957

FOREIGN PATENTS

622,148	Germany	Nov. 21, 1935
1,081,893	France	June 16, 1954