June 6, 1961 A. L. WAXMAN 2,986,973

LOW-RECOIL, VARIABLE-RANGE MISSILE PROJECTOR

Filed Sept. 20, 1954

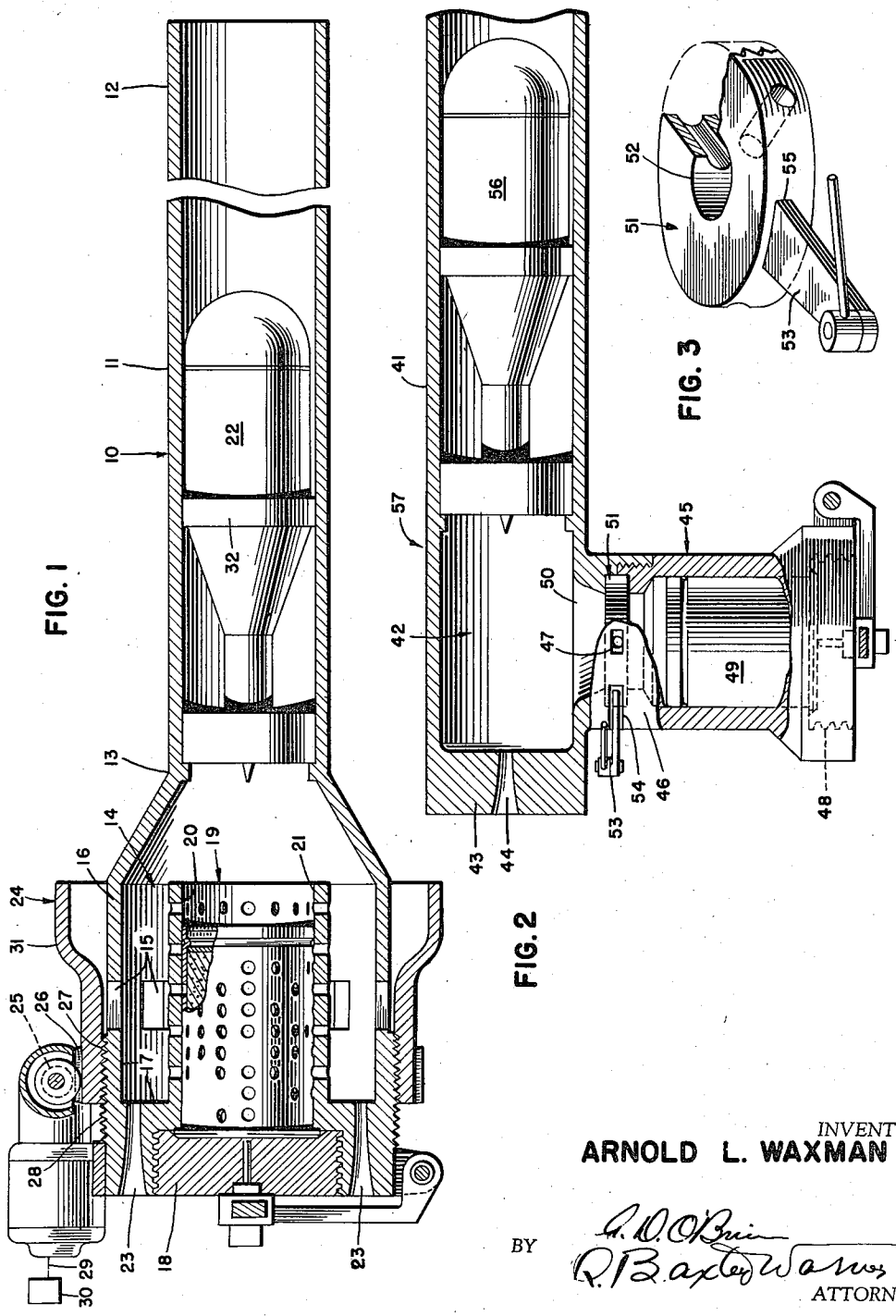

INVENTOR
ARNOLD L. WAXMAN

BY G. D. O'Brien
R. B. Baxter Warner
ATTORNEYS

United States Patent Office

2,986,973

Patented June 6, 1961

1

2,986,973

LOW-RECOIL, VARIABLE-RANGE MISSILE PROJECTOR

Arnold L. Waxman, Albany, N.Y., assignor to the United States of America as represented by the Secretary of the Navy

Filed Sept. 20, 1954, Ser. No. 457,320
3 Claims. (Cl. 89—1.7)
(Granted under Title 35, U.S. Code (1952), sec. 266)

The invention described herein may be manufactured and used by or for the Government of the United States of America for governmental purposes without the payment of any royalties thereon or therefor.

The present invention relates to a low-recoil, variable-range missile projector and more particularly to a low-recoil, variable-range missile projector for antisubmarine warfare which is provided with exhaust gas venting structure to selectively vary the range of the missile while maintaining optimum water entry and underwater trajectory.

Present missile projectors for combating submarines are generally fixed launchers with respect to train and elevation and variations in range can be obtained in a mortar-like method only by changing the amount of launching explosive to be fired. This system is inadequate in that the launching explosives have to be prepacked to fulfill different range requirements, and as each range requires a certain amount of explosive, the number of total ranges possible are severely restricted. The limited ranges afforded by this type of projector necessitate the hazardous operation of maneuvering the attack vessel within the range of the projector in order that the missile can be successfully exploded within an effective proximity to the underwater target.

The prior art antisubmarine missile projectors have the additional disadvantage of being restricted to a relatively small weight missile because their stationary structures cannot effectively counteract large recoil forces.

The present invention is believed to overcome the above-mentioned deficiencies now present in missile projectors for antisubmarine warfare by the provision of a projector which has a low recoil and a variable range made possible by novel structure which allows controlled venting of exhaust gases of the propellent explosive.

An object of the present invention is the provision of a projector for antisubmarine ordnance having controllable means for the escape of propellent gas forces from the expansion chamber to the atmosphere to vary the missile range.

Another object is to provide a low-recoil missile projector which enables a missile to have a fixed angle of water entry and underwater trajectory at various ranges.

A further object of the invention is the provision of means for varying the range of a projected missile without a change in the weight or amount of explosive propellant and without changing the elevation of the barrel of the projector with respect to the horizontal.

A further object is the provision of a relatively light-weight projector in comparison with the weight of the projectile launched.

A still further object of the present invention is the provision of a projector for launching mortar-type ammunition having a remotely controlled range varying system.

Other objects and many of the attendant advantages of this invention will be readily appreciated as the same becomes better understood by reference to the following detailed description when considered in connection with the accompanying drawings wherein:

FIG. 1 is a longitudinal sectional view partly in elevation of a preferred embodiment of the invention;

2

FIG. 2 is a similar view of a modified form of the missile projector; and

FIG. 3 is a perspective view, partially broken away, of the valve and associated linkage.

The present invention is a depth charge projector which has a smooth bore barrel attached to a pressure vessel, such as an expansion chamber, having circumferentially spaced openings or vents through the wall thereof to vent to the atmosphere propellent gas from the pressure vessel. The projectile range may be controlled by varying these vent openings. Escape ports through the after section of the breech serve to counteract much of the recoil of the projector by permitting the escape of propellent gas forces rearwardly to the atmosphere.

Referring now to the drawings, wherein like reference characters designate like or corresponding parts throughout the several views, FIG. 1 illustrates a preferred embodiment wherein a missile projector **10** has a barrel **11** with muzzle end **12** and a chamber end **13**. The barrel **11** is attached at its chamber end **13** to an expansion chamber **14** having circumferentially spaced vents **15** through the wall **16** thereof leading to the atmosphere. Concentrically spaced from the inner surface **17** of expansion chamber **14** and engaged to the inner surface of a breech plug **18** is a powder case receiver **19** having perforations in the cylindrical wall **20** thereof and being open at the forward end **21** of the receiver just aft of the barrel **11**. The cylindrical wall **20** of the powder case receiver **19** extends longitudinally forward of the vents **15** to act as a baffle to direct propellent gas forces toward the barrel **11** and behind a projectile **22** in barrel **11**. As the initial thrust force of the explosion of a powder charge pushes the projectile **22** through the barrel **11**, the propellent gas is directed rearwardly around the exterior of wall **20** of powder case receiver **19** in the space between the outer surface of the powder case receiver **19** and the inner surface **17** of the expansion chamber wall **16** and through the breech plug **18** via expansion chamber venturi ports **23** axially bored therethrough.

A variation in range of the projectile **22** is obtained by controlling the opening size of vents **15** by a valve such as a sleeve **24** mounted on the outside of wall **16**. The sleeve **24** moves longitudinally on said wall **16** over the vents **15** to open or close them fully or partially by means of an actuating mechanism such as worm gear **25** engaging exterior threads **26** on sleeve **24** to rotate the sleeve on interior threads **27** which are meshed with a threaded portion **28** of the expansion chamber wall **16**. The worm gear **25** is suitably connected by linkage **29** to a range control master **30** at a removed position from the projector **10**. The sleeve **24** is provided with a forwardly open integral bell flange **31** to direct the expelled gases forwardly thus to some extent compensate for the tendency toward overcompensation for the recoil energy at shorter target ranges.

The impulse ammunition used as an explosive propellent force may be of the type commonly used in launching depth charges from mortar or bomb type projectors. The propelling charge is normally contained in a cartridge case having a forward disk and end wad and, on firing the propelling charge, the disk retains the gas of the initial explosion to promote a build-up of pressure in order that a proper pressure for efficient combustion is established and that, when released, the pressure will overcome the inertia of the projectile to start its expulsion.

The projectile best adapted for ammunition for the present invention is the bomb type, vane stabilized depth charge having the front end, or ogive, of a blunt curvature. The blunt nose of the projectile is chosen because it best retains the water entry and underwater trajectory characteristics desired.

A faired nose projectile has the inherent fault of resurfacing due to the forces of the water against the nose curved surface. The projectile **22** may have a gas seal ring such as ring **32** in close tolerance with the barrel bore to prevent the propellent gases from going forward around the projectile rather than pushing behind the projectile.

A modification of the projector of FIG. 1 is the projector illustrated in FIG. 2 which has a barrel **41**, an expansion chamber **42** connected to the after end of barrel **41**, and a breech plug **43** closing the end of the expansion chamber **42** and having a venturi port **44** axially bored therethrough. A laterally extending side member **45** is attached to the expansion chamber **42** to receive a powder charge in the outermost portion thereof. The cylindrical wall **46** of the side member **45** has radially spaced vents **47** located adjacent to and equidistant from the expansion chamber and the side member juncture **50**. A hatch **48** is provided in the end of side member **45** to receive the propellent charge **49**. A three-way valve **51**, as shown by FIG. 3, rotatably secured within the side member **45** in a plane perpendicular to the longitudinal axis of the side member so as to cooperate with the vents **47** to vary the openings thereof to the atmosphere. The centrally located passage **52** of three-way valve **51** connects the side member with expansion chamber **42**. Valve **51** is rotated by either a manually or electrically operated lever arm **53** which extends from the exterior of the side member through slot **54** to a rigid connection **55** with rotatable valve **51**.

Range selection is procured in the projector modification of FIG. 2 by adjusting the vent opening by valve **51** to allow a quantity of propellent gas to escape therethrough. The main force of the propellent gas continues through the passage **52** to expansion chamber **42** and thence to the barrel **41** to expel the projectile **56**. Recoil of the projector **57** is counteracted by the provision of venturi port **44** which allows the rearward escape of propellent gas.

Obviously many modifications and variations of the present invention are possible in the light of the above teachings. It is therefore to be understood that within the scope of the appended claims the invention may be practiced otherwise than as specifically described.

What is claimed is:

1. A low-recoil, variable-range missile projector comprising a barrel, an expansion chamber having a venturi port axially extending through the rear thereof and connected to said barrel, a powder case receiving member laterally attached to said expansion chamber by a valve containing means intermediate said expansion chamber and said powder case receiving member, said valve containing means having radially spaced vents located through the wall thereof, a valve rotatably mounted within said valve containing means having an opening axially therethrough to allow passage of gases from said powder case receiving member to said expansion chamber and further having a plurality of ports positioned to be in alignment with said radially spaced vents when the valve is in a predetermined position, and means to adjust said valve whereby the alignment of the missile projector is unaffected by variable venting of burning gases to the atmosphere.

2. A low-recoil, variable-range missile projector as in claim 1 wherein said means to actuate the valve comprises a lever arm connected to said valve and extending outwardly through a slotted opening in the wall of said powder case receiving member.

3. A low-recoil, variable-range missile projector comprising, a barrel, an expansion chamber connected to said barrel and having a venturi port axially extending through the rear thereof, a powder charge receiving member laterally attached to said expansion chamber by a casing means, said casing means having radial vents, an annular valve rotatably mounted within said casing means and having openings extending radially therethrough, said openings being so arranged as to fall in alignment with said vents when the valve is rotated into a predetermined position, said valve having an actuating member attached thereto and extending through a slotted opening in the wall of said powder charge receiving member for rotating said valve to produce variable venting of burning gases to the atmosphere.

References Cited in the file of this patent

UNITED STATES PATENTS

1,299,136	Davidson	Apr. 1, 1919
1,322,980	Wale	Nov. 25, 1919
1,559,183	Rimailho	Oct. 27, 1925
2,093,058	Savani	Sept. 14, 1937
2,094,305	Savani	Sept. 28, 1937
2,378,735	Shaffer	June 19, 1945
2,417,983	Holman et al.	Mar. 25, 1947
2,444,949	Musser	July 13, 1948

FOREIGN PATENTS

404,186	Great Britain	Jan. 11, 1934