March 21, 1961 L. E. LINDSEY 2,975,997

SUSPENSION CLAMP FOR CONDUCTORS

Filed Aug. 1, 1958

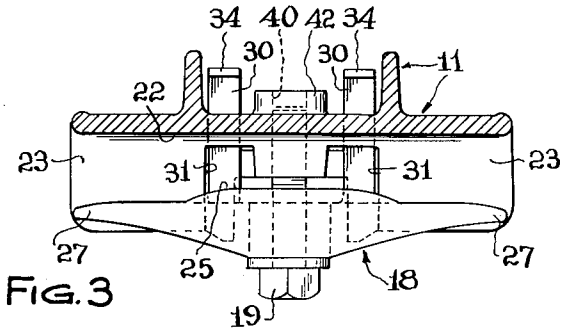

FIG. 3

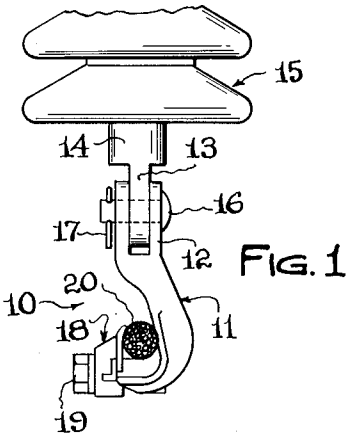

FIG. 1

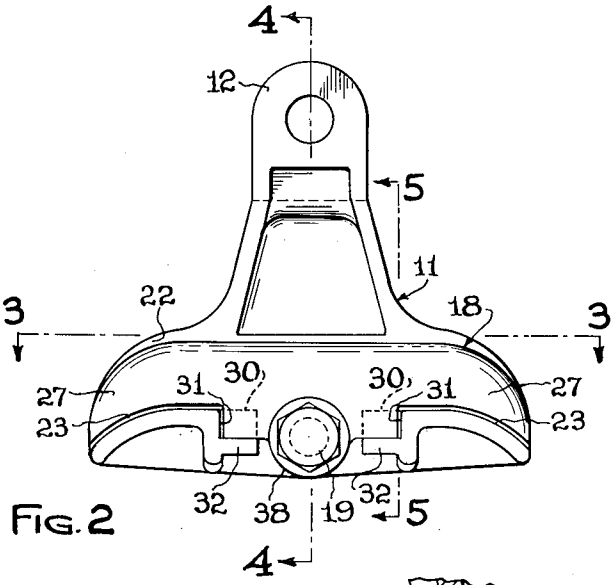

FIG. 2

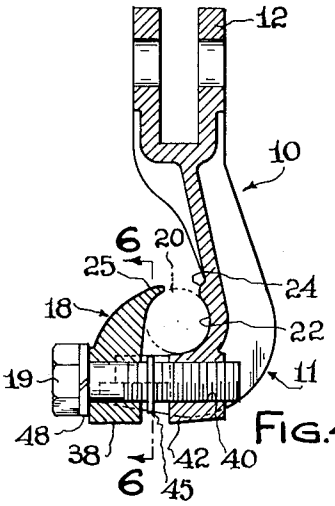

FIG. 4

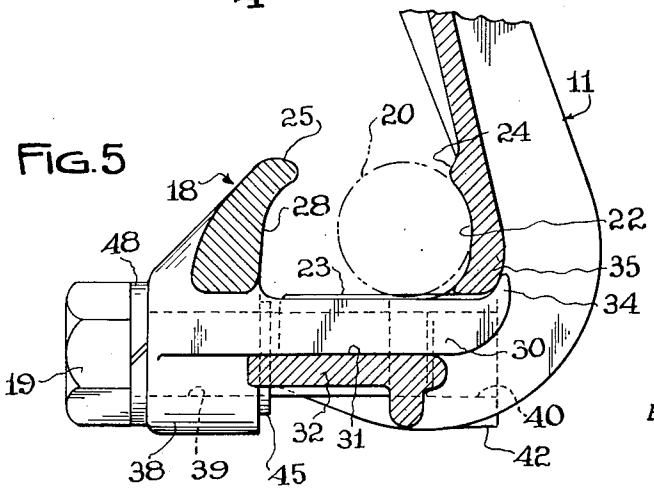

FIG. 5

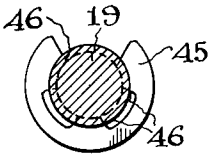

FIG. 6

INVENTOR.
L. E. LINDSEY
BY
ATTORNEY.

United States Patent Office

2,975,997

Patented Mar. 21, 1961

1

2,975,997

SUSPENSION CLAMP FOR CONDUCTORS

L. E. Lindsey, 2262 E. Mountain St., Pasadena, Calif.

Filed Aug. 1, 1958, Ser. No. 752,613

10 Claims. (Cl. 248—63)

This invention relates to cable clamps and more particularly to an improved safety conductor suspension clamp for use on transmission lines and is particularly adapted for servicing and replacing high tension conductors while hot.

In the servicing of high tension conductors of power transmission lines, it is ofttimes necessary or desirable to remove a conductor temporarily while servicing the supporting tower or while replacing the suspension insulator without, however, interrupting the operation of the transmission line. This operation necessitates a lineman approaching the conductor clamp and loosening it to permit removal of the conductor as well as in the replacement of the conductor and the retightening of the clamp at the conclusion of the operation. This is an extremely hazardous task at best, and various proposals have been made heretofore for clamps incorporating a maximum number of safety features for the workmen. Despite these efforts, available clamps are subject to numerous objections as well as to the malfunctioning and misfunctioning of the safety features provided. Such malfunctioning and misfunctioning are intolerable in an acceptable clamp.

For example, prior clamps, though utilizing a single clamping fastener device between the relatively moving parts lack automatic aligning features assuring that the parts are in proper alignment should it be necessary for the workmen to insert the fastener while the clamp is hot. Likewise, prior clamps lack positive security means guarding against accidental detachment of the fastener during loosening of the clamp. Although prior clamps have been proposed using a single moving jaw member, there has been inadequate safeguards preventing the accidental detachment of this part should the fastener become detached, with the possibility a hot conductor might escape from the clamp due to accidental detachment of the movable jaw member.

Another shortcoming of prior suspension clamps has been the location of the movable jaw member on the inner or main body side of the conductor clamping position with the result that the loosening of the clamp provides inadequate leeway for removal of the conductor as well as for its replacement after servicing.

The present invention provides a conductor suspension clamp specifically designed to obviate the aforementioned and other shortcomings and disadvantages of prior suspension clamps. The main body of the clamp is of generally J-shape as viewed transversely of the conductor to be supported and includes an outer movable jaw coextensive in length with the fixed jaw and adjustable laterally relative thereto. The movable jaw features a pair of guide fingers having upturned ends formed to have interlocking engagement with the main body and to be detachable therefrom only when pivoted upwardly into virtual contact with the main body before disengagement of the parts is possible, thereby providing positive assurance against accidental detachment of the parts. Another feature of the design is that the movable

2

jaw member is so designed that the weight of the conductor when present in the clamp prevents movement of the clamping jaw toward a disengaging position.

Accordingly, it is a primary object of the present invention to provide an improved conductor suspension clamp featuring new and improved safety features equally effective in protecting personnel and equipment.

Another object of the invention is the provision of a new lightweight suspension clamp of the side opening type having a movable jaw incapable of being separated except by movement through a predetermined non-linear path relative to the main body.

Another object of the invention is the provision of a two-piece suspension clamp specially designed for servicing while the supported conductor remains hot, and wherein the clamping jaws are movable between closed and open positions, the latter affording a maximum of clearance for the removal and insertion of a hot conductor without possibility of any part becoming detached.

These and other more specific objects will appear upon reading the following specification and claims and upon considering in connection therewith the attached drawing to which they relate.

Referring now to the drawing in which a preferred embodiment of the invention is illustrated:

Figure 1 is a transverse sectional view across a transmission line closely beside a suspension clamp according to the present invention;

Figure 2 is a side view of the clamp on an enlarged scale as viewed from the movable jaw side of the clamp;

Figure 3 is a transverse sectional view taken along line 3—3 on Figure 2;

Figure 4 is a longitudinal sectional view taken along line 4—4 on Figure 2;

Figure 5 is a fragmentary transverse view on an enlarged scale taken along line 5—5 on Figure 2; and

Figure 6 is a fragmentary view on an enlarged scale taken along line 6—6 on Figure 4 showing details of the safety keeper for the threaded fastener.

Referring more particularly to Figure 1, there is shown a preferred embodiment of the suspension clamp designated generally **10** having a main body **11** of generally J-shape. Body **11** is provided at its upper end with a clevis **12** connectable to the tongue **13** of stud **14** at the lower end of a multiple section high-tension insulator **15**. Clamp **10** is held to tongue **13** by means of a pin **16** locked in assembled position by cotter pin **17**. Clamp **10** includes, in addition to main body **11**, a movable clamping jaw **18** held assembled to the main body, as by cap screw **19**, and cooperating with the main body in securing the high tension conductor cable **20** in place therein.

Referring briefly to Figures 2 to 6, it is pointed out that J-shaped main body **11** has a relatively long conductor seating channel **22** formed in the open side of its fixed jaw, the opposite end of its bottom wall being curved downwardly at **23** providing a generally saddle-shaped seat for the conductor. As is best viewed in Figures 4 and 5, the side wall of channel **22** is curved to form a surface conforming generally with the adjacent side of conductor **20**, this surface including a generally longitudinally extending rib **24** effective to prevent the cable from rising out of the seating channel by excessive tightening of the movable jaw **18** or other cause. It will be understood that rib **24** cooperates with the inturned upper rim or lip **25** of movable jaw **18** in holding the cable positively secured within the clamp when fastener **19** is fully tightened.

Movable jaw **18** includes ears **27, 27** at its opposite end conforming generally to the length and curvature of the juxtaposed surface areas of channel **22** including its curved end portions **23**, as is best shown in Figure 2. The inner longitudinal side wall **28** of the jaw extends

generally vertical but projects along its upper inner edge to form lip 25. Projecting laterally from the inner lower portion of side wall 28 of the movable jaw are a pair of parallel fingers 30, 30 (Figures 2, 3 and 5) which project generally horizontally in the operating position of the clamp and fit loosely through a transverse slideway 31 opening through the hooked portions of main body 11. Slideway 31 includes a pair of horizontal flanges or ledges 32 which underlie and support fingers 30. It will be recognized that fingers 30 are sufficiently long to permit wide opening of movable jaw 18 to the position shown in Figure 5 and include curved upturned ends 34 cooperating with the rearward end wall 35 of transverse guideway 31 to hold the movable jaw positively locked against withdrawal from the clamp except by movement of the jaw through a non-linear path.

An enlarged section or boss 38 centrally of jaw 18 is provided with a loose fitting opening 39 for the shank of cap screw 19, this opening being in axial alignment with a threaded bore 40 for the cap screw formed in a boss 42 (Figure 4) located vertically below suspending clevis 12 and between flanges 32, 32 of slideway 31. As is best shown in Figure 5, the bottom surface of conductor supporting channel 22 normally lies somewhat above the upper surfaces of fingers 30 in order that clamping jaw 18 may be freely moved along slideway 31 without interference from the conductor.

To safeguard the possibility of accidental detachment of fastener screw 19 when loosening clamp 18, there is provided a spring keeper 45 (Figures 4, 6) comprising a crescent-shaped ring having three tangs 46 formed to seat in the trough portion of the threads on cap screw 19. It will be understood that the keeper ring is so proportioned as to be assembled over the threaded shank of the cap screw by a press fit. Tangs 46 grip the thread so firmly that the keeper can be threaded therealong only with difficulty. Keeper ring 45 is snapped into assembled position on the cap screw shank to lie closely adjacent the inner side wall 28 of bars 38 when cap screw 19 and its lock washer 48 are positioned against the outer end of boss 38. Consequently, any attempt to unscrew cap screw 19 further from the position of the parts shown in Figure 5 will bring the face of keeper 45 against the adjacent portion of wall 28 causing the cap screw to turn with difficulty thereby apprising the operator that the screw has been turned to its outermost position. Since the friction between tangs 46 and the screw threads is greater than that between the surface of the keeper and jaw wall 28, it is impossible to thread the keeper along the screw by continuing to turn the cap screw.

The mode of operation of the described suspension clamp will be obvious from the foregoing detailed description of its structure and the functions of the several parts. Let it be assumed that conductor 20 is in place on a transmission line and that power is flowing along the conductor. If servicing of suspension insulator 15 is required, a lineman ascends the tower and, using the prescribed protective equipment, applies a wrench to screw 19 loosening it so that jaw 18 can be moved to the fully opened position shown in Figure 5. The distance between rib 24 and clamp lip 25 is then at a maximum and provides a wide mounted gap through which the conductor can be lifted by means of suitable poles handled by linemen at ground level.

After the required service work has been performed and a check has been made to assure that jaw 18 is fully open, hot cable 20 is re-elevated by the poles and lowered into clamp channel 22 through the wide gap provided between rib 24 and lip 25. If during this maneuver the conductor should be brought into contact with the outer end of jaw 18, this jaw cannot be pivoted upwardly or shifted materially out of open position because of the retaining action provided by cap screw 19.

Let it be assumed, however, that through negligence the lineman has neglected to assemble keeper spring 45 over the shank of cap screw 19 and that the cap screw has been unthreaded from bore 40 in the main body. In these circumstances, jostling of the clamp in an attempt to reseat the conductor can displace cap screw 19. If this loss should go undetected and the lineman in attempting to insert the hot conductor should strike the underside of jaw 18, it would be possible to tilt the jaw upwardly through the open top side of guideway 31 with the upturned ends 34 of fingers 30 pivoting about lip 35. However, even though this pivotal movement is in a direction to detach jaw 18, it is impossible to detach the jaw solely by the lifting force applied by a conductor while being elevated. This is because the jaw cannot be detached from the guideway until lip 25 is substantially in contact with the vertical leg of main body 11. Appreciably prior to reaching this pivotal position, the weight of the jaw will have caused the jaw to slide from the conductor and to fall downwardly along an inclined path through the open rear end of guideway 31 to bypass the conductor whereupon the jaw will tilt by gravity into seated position on ledges 32. Accordingly, the described clamp is foolproof in every respect and under no happenstance is a dangerous condition possible.

If attempts to reinstall the hot conductor should result in partial closure of jaw 18, the jaw will normally be forced to open position by elevating the conductor against the upper portion of the stem of the clamp and then allowing it to fall into contact with rib 24 and lip 25 whereupon the weight of the conductor will force the movable jaw into open position. Thereafter, the cap screw 19 is tightened to clamp the conductor rigidly into place.

Should it become desirable for any reason to replace a damaged jaw while the clamp remains attached to insulator 15, it is first necessary to remove keeper 45 which may be done using a special service tool provided for this purpose. Thereafter, cap screw 19 is removed allowing jaw 18 to be withdrawn to its extended open position after which the jaw is pivoted vertically about lip 35 until jaw lip 25 substantially contacts the vertical leg of the clamp. Not until this position is reached is it possible to withdraw hooked end 34 past lip 35 by an upward and outward lifting movement away from the stem of the clamp.

Reassembly of a new jaw is effected in reverse order. As the new jaw comes to rest against ledges 32 of slideway 31, opening 39 in boss 38 is automatically aligned with threaded bore 40 in the main body and provides a guide for the expeditious reassembly of the cap screw, an operation which may be done quickly and with a minimum of effort without any particular attempt being made to align the shank of the screw with its mating threads 40.

While the particular foolproof safety suspension clamp for use on high tension lines herein shown and disclosed in detail is fully capable of attaining the objects and providing the advantages hereinbefore stated, it is to be understood that it is merely illustrative of the presently preferred embodiments of the invention and that no limitations are intended to the details of construction or design herein shown other than as defined in the appended claims.

I claim:

1. A suspension clamp for use in suspending high tension conductors comprising a main body hook having a clevis adapted to be pivotally connected to an insulator, said body hook having a transverse horizontally disposed slideway provided at its inner end with a threaded opening for seating the threaded end of a clamping bolt, a unitary conductor clamping member extending crosswise of said slideway and movable therealong, said clamping

member forming one lateral side of said main body hook and being shaped to cooperate with the oppositely contoured juxtaposed surface of said main body to clamp and hold a conductor rigidly in place therebetween, said clamping member having integral guide means freely slidable along said slideway and so shaped as to permit wide-range movement of said member laterally toward and away from the clamping surface of said main body, and a clamping bolt separable from said jaw and having threaded engagement with said main body for holding a conductor rigidly clamped between said main body and said clamp jaw.

2. A suspension clamp as defined in claim 1 characterized in that said clamping member and said main body have interengaging portions arranged to provide limited free movement of the jaw member between fully open and fully closed positions and effective to hold said main body and clamping member locked against disassembly so long as a conductor is present therebetween while permitting disassembly when a conductor is not present.

3. A suspension clamp as defined in claim 1 characterized in that said clamping member and said main body have interengaging portions so shaped and arranged as to permit disassembly of said clamping member from the normally prevailing operating position of the clamp only by lifting said clamping member through a predetermined path while a conductor is absent from said clamp and traversing the position normally occupied by the conductor.

4. A suspension clamp as defined in claim 1 characterized in that said main body and said clamping member have interengaging portions for holding the same in conductor-supporting position relative to one another independently of said clamping bolt whereby the accidental loss of said bolt does not present a hazard or permit a live conductor to fall from said clamp.

5. An electrical conductor suspension clamp for use with high tension transmission lines, said clamp comprising a hook-shaped main body adapted to be pivotally suspended, said body having at its lower end an elongated conductor supporting portion traversed by a horizontally disposed slideway and support for a conductor clamping jaw having portions juxtaposed to and supplementing the conductor supporting portion of said main body in holding a conductor captive within said clamp, a jaw having portions thereof extending loosely along said slideway and including portions engageable with the lower portions of a conductor to prevent substantial upward movement of said jaw so long as a conductor is present, said jaw being freely movable upwardly relative to said main body when a conductor is not present and being disengageable from said body while in a predetermined upwardly pivoted position.

6. A suspension clamp as defined in claim 1 characterized in that said main body and said jaw member include interengaging portions for holding said jaw member in lateral alignment with the juxtaposed side of said main body while permitting said jaw member to be lifted

upwardly through a non-linear path relative to said main body so long as a conductor is not supported within said clamp.

7. A suspension clamp as defined in claim 6 characterized in that the interengaging portion of said jaw member includes a pair of fingers projecting laterally from one side thereof and spaced from one side thereof spaced to lie along the opposite side walls of the transverse slideway through said main body, said main body having a threaded opening parallel to said slideway and between said fingers for a clamping bolt, and said jaw having a clamping bolt opening therethrough aligned with said threaded opening.

8. A suspension clamp as defined in claim 7 characterized in that the interengaging portion of said jaw member comprises a pair of parallel fingers having upturned ends, said fingers being disposed to either side of a clamping bolt operable to clamp a conductor between juxtaposed surfaces of said jaw and main body, and means for holding said bolt detachably assembled to one of said body and jaw members irrespective of whether the relatively rotated threaded portions of the clamping bolt are engaged.

9. A side-opening two-piece suspension clamp having a main body provided with an upwardly opening clevis, the opposite lower end of said main body having an elongated conductor supporting channel extending generally parallel to the side walls of said clevis and having rounded downturned ends, said channel being open fully along one lateral side, a transverse horizontal opening through said main body centrally below and opening into the bottom of said channel, a movable jaw member having guide and retainer fingers slidable along said transverse opening and a clamping jaw extending along the open side of said channel, and threaded fastener means separable from said jaw for adjustably locking said movable jaw in position to clamp a conductor in place in said channel.

10. A side-opening clamp as defined in claim 9 characterized in that said main body and the upper lip edge of said movable jaw are shaped to guide a conductor downwardly into said channel as the conductor is lowered, said fastener means including means effective to cam the clamp parts to open position as an incident to the loosening of said fastener means.

References Cited in the file of this patent

UNITED STATES PATENTS

255,700	Thomson	Mar. 28, 1882
380,178	Brown	Mar. 27, 1888
1,373,421	Graham	Apr. 5, 1921
1,523,597	Lang	Jan. 20, 1925
1,850,021	Marrone	Mar. 15, 1932
2,026,260	Tarbox	Dec. 31, 1935
2,175,974	Shurtz	Oct. 10, 1939
2,787,775	Sorflaten	Apr. 2, 1957

FOREIGN PATENTS

575,483	France	Apr. 23, 1924