Dec. 20, 1960 A. SCHLUMPF ET AL 2,965,214

HANGER TRANSFER DEVICE IN PARTICULAR IN DRIERS FOR LONG-SIZE ALIMENTARY PASTE PRODUCTS

Filed June 4, 1957 2 Sheets-Sheet 1

Fig.1

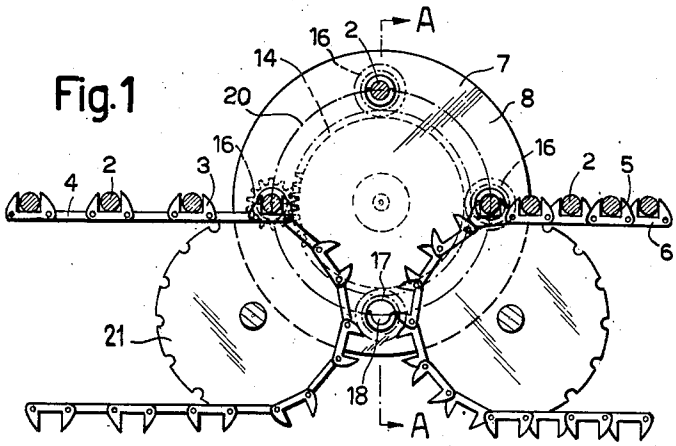

Fig.2

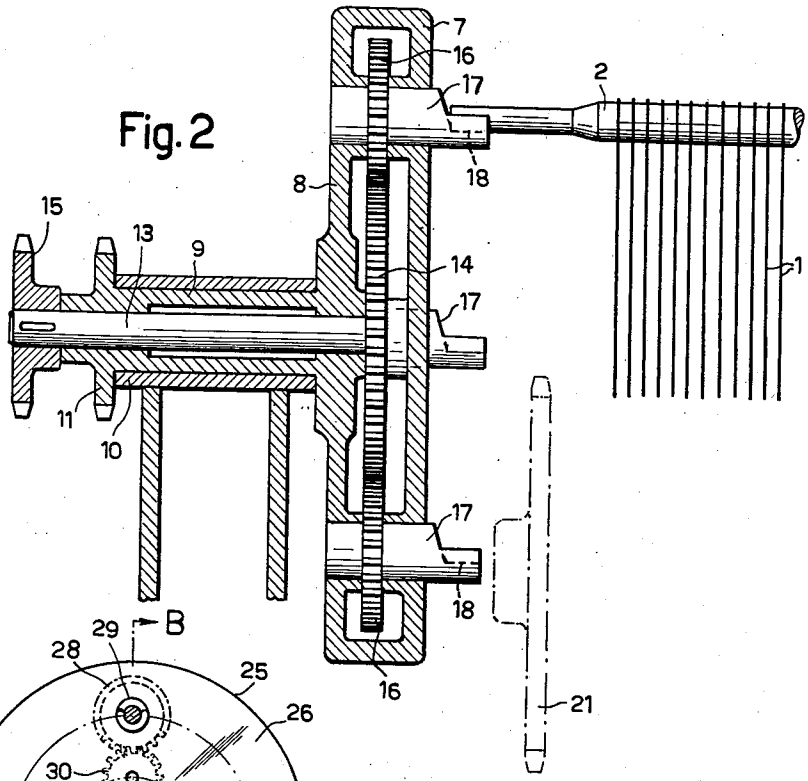

Fig.3

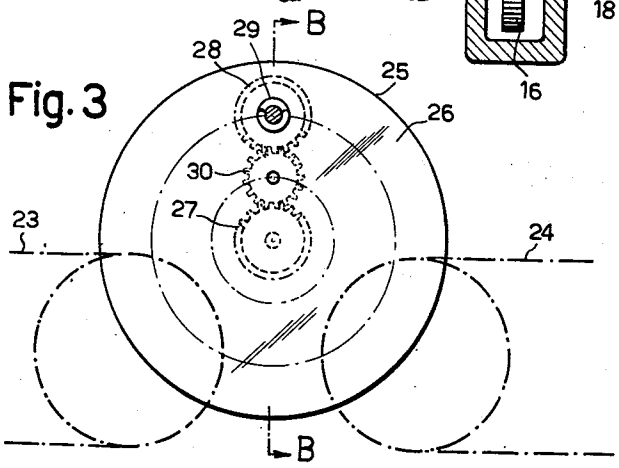

ALBERT SCHLUMPF
MARIO DANIOTTI
INVENTORS

BY C. P. Goepel
their ATTORNEY

Dec. 20, 1960 A. SCHLUMPF ET AL 2,965,214

HANGER TRANSFER DEVICE IN PARTICULAR IN DRIERS FOR LONG-SIZE ALIMENTARY PASTE PRODUCTS

Filed June 4, 1957 2 Sheets-Sheet 2

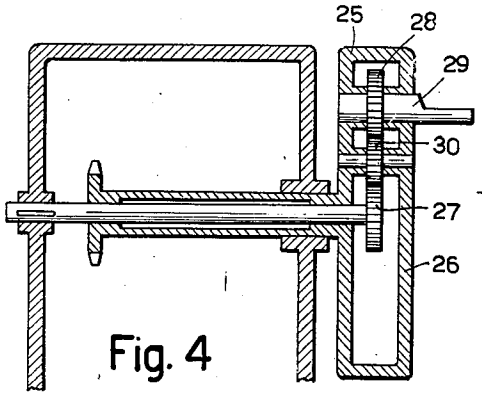

Fig. 4

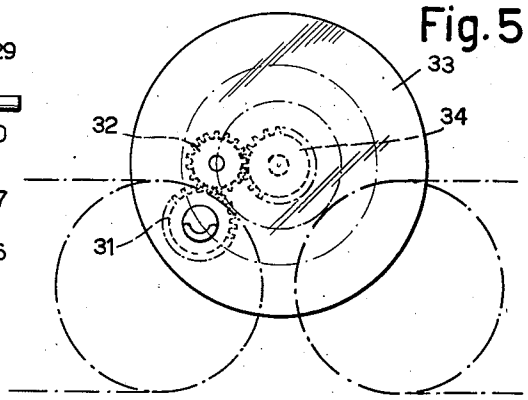

Fig. 5

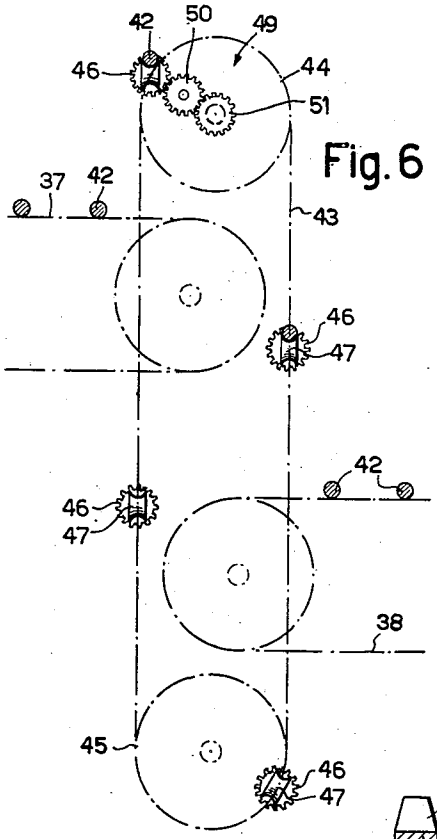

Fig. 6

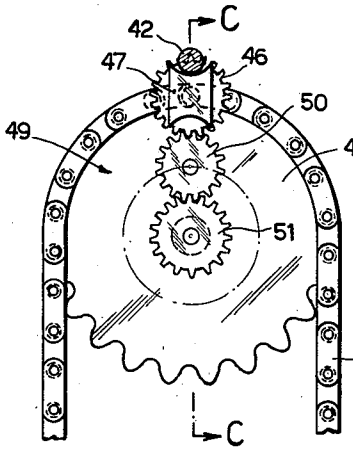

Fig. 7

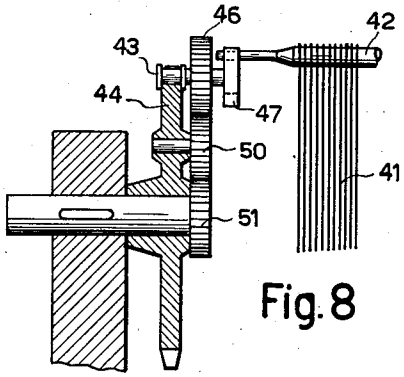

Fig. 8

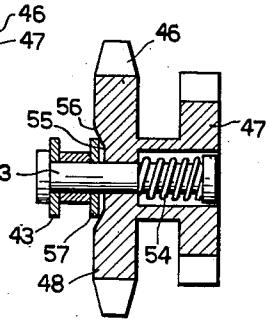

Fig. 9

INVENTORS:
ALBERT SCHLUMPF
MARIO DANIOTTI
BY C. P. Goepel
their ATTORNEY

United States Patent Office

2,965,214

Patented Dec. 20, 1960

1

2,965,214

HANGER TRANSFER DEVICE IN PARTICULAR IN DRIERS FOR LONG-SIZE ALIMENTARY PASTE PRODUCTS

Albert Schlumpf, Uzwil, Switzerland, and Mario Daniotti, Milan, Italy, assignors to Gebrueder Buehler, Uzwil, Switzerland, a firm of Switzerland

Filed June 4, 1957, Ser. No. 663,524

Claims priority, application Switzerland June 5, 1956

1 Claim. (Cl. 198—25)

Long-size food-paste products, such as spaghetti, after extrusion conventionally are hung from hangers which carry them through the various drying units. These hangers are transported by chain conveyers between which transfer devices have to be provided in which the hangers should perform only a translatory movement, since upon a partial rotation of these hangers about their axes the arrangement of the products to be dried is disturbed, which event, for example in the case of freshly extruded goods, would lead to a difference in length between the two legs of the spaghetti.

The present invention discloses a transfer device in which the hangers execute a pure translation, and in which it is assured that the drivers or dogs are always in the proper position when seizing a hanger. The present invention thus relates to a transfer device between two chain conveyers for hangers, in particular hangers for long-size food-paste products such as spaghetti. This transfer device is characterized in that it comprises on each side at least one driver for the hanger ends, which driver is integral with a planetary wheel of a planetary gearing unit, the transmission ratios being so chosen that the driver performs a pure translation or, in other words, that any imaginary plane attached to the driver always remains parallel to itself.

The invention, by the use of a conveying chain within the transfer device, further affords the possibility of delivering or handling the hangers between two chain conveyers spaced relatively far apart from each other.

The use of the invention is, however, not confined to the drying of food-paste products, but may be extended to all the transfer devices in which the goods to be conveyed have to execute a purely translatory movement.

Various forms of the invention are shown, by way of example, in the drawings, in which—

Fig. 1 is a schematical side view of the device according to the invention; Fig. 2 shows a section, on a larger scale, on the line A—A of Fig. 1; Fig. 3 schematically shows another form, similar to Fig. 1; Fig. 4 is a section on the line B—B of Fig. 3 on a somewhat smaller scale; Fig. 5 schematically shows a further form, similar to Fig. 1; Fig. 6 schematically shows the use of a chain in the device between two spaced-apart chain conveyers; Fig. 7 depicts a portion of Fig. 6 in a larger scale; Fig. 8 shows a section on the line C—C of Fig. 7; and Fig. 9 is a section through the chain and a driver in a loose strand of the conveying chain.

The hangers 2 (Figs. 1 and 2), from which are hung spaghetti 1, are transferred from the carriers 3 of a first chain conveyer 4 on to the carriers 5 of a second chain conveyer 6. Between the two chain conveyers 4 and 6 is disposed the transfer device which comprises a planetary gearing unit 7 on each side or at each end of the hangers 2. The web 8 of gearing 7 is mounted in the machine casing 10 and on a hollow shaft 9 driven by a sprocket 11 at n_w revolutions per minute. In hollow shaft 9 is mounted the shaft 13 of a sun wheel 14 which

2

has t_s teeth and is driven by a sprocket 15 which has a speed of n_s revolutions per minute. In web 8 are mounted planetary wheels 16 of which each has t_p teeth. The wheels 16 mesh with sun wheel 14 and are integral with pickup and transfer dogs or drivers 17 which have sockets or troughs 18 for the ends of the hangers 2. The speeds n_s satisfy the requirement:

$$n_s = n_w\left(1+\frac{t_p}{t_s}\right)$$

Upon rotation of web 8, the dogs 17 travel in the circular path lifting the hangers 2 from chain conveyer 4 of which the idler wheel 21 is indicated in Fig. 2. The dogs 17 move the hangers 2 on to chain conveyer 6. The movement of the chain conveyers 4, 6 is, of course, synchronized with that of web 8, for example by chains and a gear drive (not shown) in order that, when one of the hangers 2 on conveyer 4 arrives in the path 20, a dog 17 is present for gripping the hanger. By virtue of the relation indicated above between the number of revolutions n_w and n_s (sun wheel 14 rotates at a somewhat higher speed than web 8) we attain that the dogs 17 rotate relatively to web 8 but execute a pure translation in space.

In the first form of invention (Figs. 1, 2) the hangers 2 are spaced farther apart on conveyer 4 which is disposed, for example, on a hanger loading machine, than on conveyer 6 which, for example, runs into a drier. Such difference is attained by making the speed of conveyer 6 lower than that of conveyer 4. It is also possible to drive conveyer 4 stepwise.

In the second form of invention (Figs. 3 and 4) the transfer device is interposed between two chain conveyers 23 and 24. Web 25 of the planetary gearing 26 rotates about a stationary sun wheel 27. In web 25 is mounted a planetary wheel 28 to which is fixed a dog 29. Web 25 carries another planetary wheel 30 which on one hand meshes with wheel 28 and, on the other hand, with sun wheel 27. In order that dog 29 performs a pure translation in space, the number of teeth of wheel 28 is equal to that of sun wheel 27.

In the third form of invention shown in Fig. 5, of which the mode of operation corresponds to that shown in Figs. 3 and 4, a saving in space requirements is possible, since the centers of the planetary wheels 31, 32 are not situated on a radius of web 33, so that the outside diameter of the latter may be decreased. Numeral 34 designates the sun wheel.

In the fourth form of invention shown in Figs. 6–9, the two chain conveyers 37, 38 are widely spaced apart. For the purpose of transferring the hangers 42, from which are hung the goods 41, a conveying chain 43 is used in the transfer device. Chain 43 is trained over sprockets 44, 45. Planetary wheels 46, to which are fixed dogs 47, are secured to chain 43. Sprocket 44 is formed as web of a planetary gearing unit 49. While one of the wheels 46 passes sprocket 44, it meshes with a further planetary wheel 50 which is mounted on sprocket 44 and which also meshes with a stationary sun wheel 51. Wheels 46 and 51 have the same number of teeth. For this reason, dog 47 executes a pure translation when passing by sprocket 44.

When dog 47 does not rotate on sprocket 44 and, thus, does not mesh with planetary wheel 50, its position with respect to chain 43 has to be positively defined, which for example is ensured by the construction shown in Fig. 9. Dog 47 which here is fixed to planetary wheel 46, is mounted on the extended chain pin 53. A spring 54 urges dog 47 against chain 43. On the end face 48 of wheel 46 is provided a diametral recess 55 of which the slightly slanted edge 56 defines the position of dog 47 with respect to the longitudinal sides of chain link 57. On

meshing with planetary wheel **50**, planetary wheel **46** has to rotate. The wedging effect of the slightly slanted edge **56** against the longitudinal sides of chain link **47** overcomes the force of spring **54**, and wheel **46** is axially moved until it can freely rotate. Upon being unmeshed or disengaged from planetary wheel **50**, planetary wheel **46** snaps back into a definite position with respect to conveying chain **43**.

We claim:

In a material handling apparatus, a first chain conveyor defining a feed path, a second chain conveyor defining an extension of said path, a pair of aligned planetary gearing units positioned in opposed relation with their common axis extending intermediate said conveyors, said planetary gearing units each comprising a sun wheel having t_s teeth, means for driving the wheel at n_s revolutions per minute, a web coaxially mounted with the sun wheel, means for driving the web at n_w revolutions per minute, at least one planetary wheel rotatably mounted in the web and having t_p teeth meshing with the teeth

of the respective sun wheel, and a pickup dog rigidly connected to said planetary wheel for engaging one end of a hanger advanced by the first conveyer and for depositing the hanger on the second conveyer, the transmission ratio between the sun wheels and the webs of each gearing unit being so selected as to satisfy the requirement

$$n_s = n_w\left(1+\frac{t_p}{t_s}\right)$$

whereby said hangers during their movement from said first conveyor to said second conveyor do not rotate about their own axes.

References Cited in the file of this patent

UNITED STATES PATENTS

1,194,932	Baker	Aug. 15, 1916
1,959,799	Potthoff	May 22, 1934
2,583,847	Hummel	Jan. 29, 1952