March 1, 1960 P. DONALDSON 2,927,311

PORTABLE CONTAINERS PROVIDED WITH THEFT ALARM DEVICES

Filed Dec. 10, 1957 3 Sheets-Sheet 1

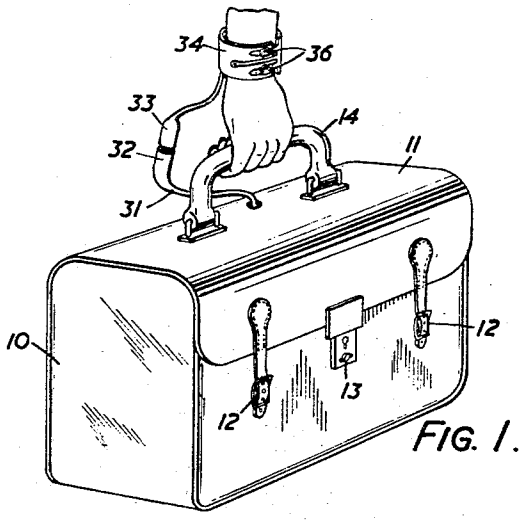

FIG. 1.

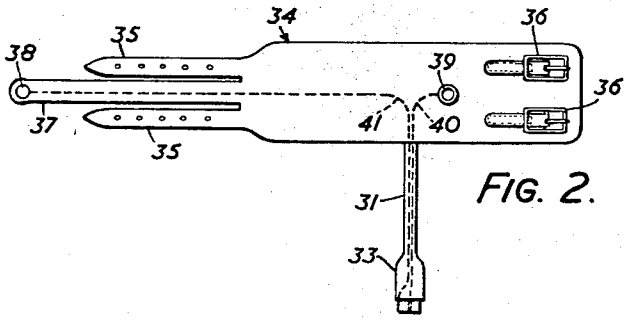

FIG. 2.

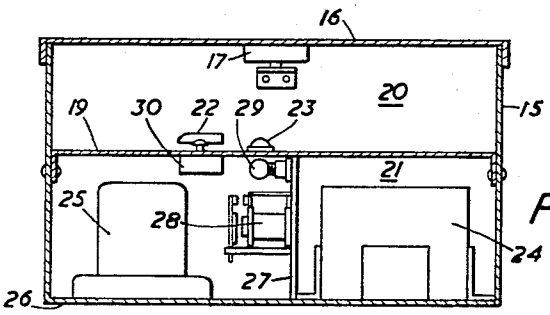

FIG. 3.

INVENTOR
PETER DONALDSON

BY
Watson, Cole, Grindle & Watson
ATTORNEYS

PORTABLE CONTAINERS PROVIDED WITH THEFT ALARM DEVICES

Filed Dec. 10, 1957 3 Sheets-Sheet 2

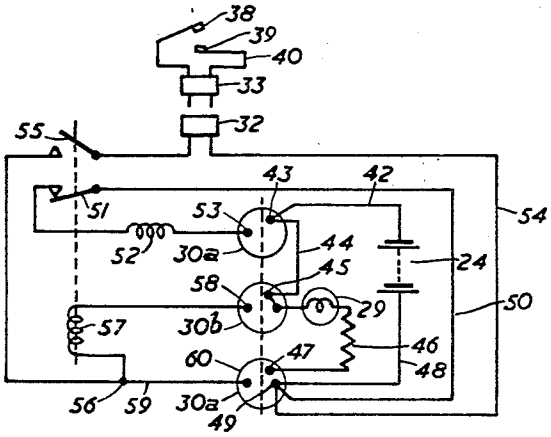

FIG. 4.

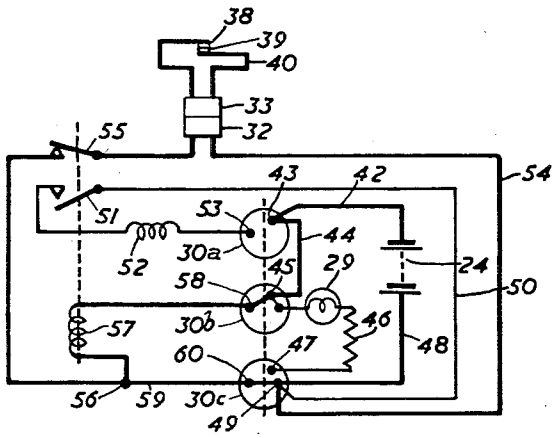

FIG. 5.

INVENTOR
PETER DONALDSON

BY
Watson, Cole, Grindle & Watson
ATTORNEYS

March 1, 1960 P. DONALDSON 2,927,311

PORTABLE CONTAINERS PROVIDED WITH THEFT ALARM DEVICES

Filed Dec. 10, 1957 3 Sheets-Sheet 3

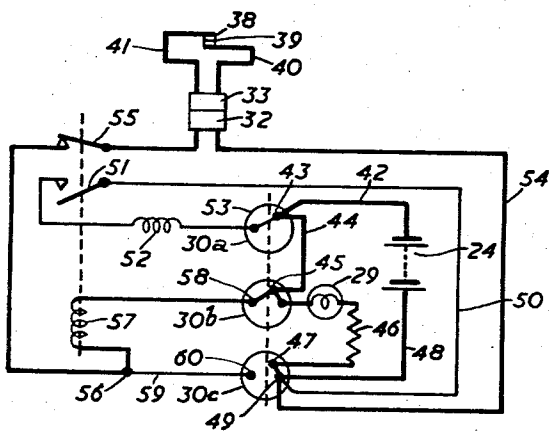

FIG. 6.

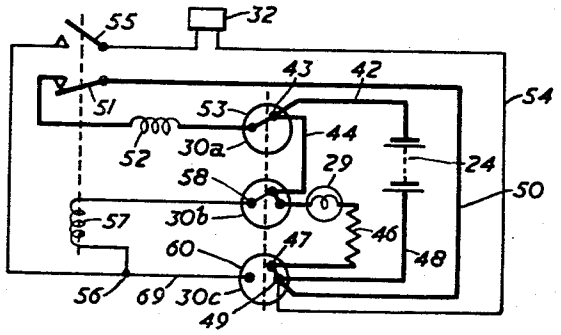

FIG. 7.

INVENTOR
PETER DONALDSON

BY
Watson, Cole, Grindle & Watson
ATTORNEYS

United States Patent Office

2,927,311

Patented Mar. 1, 1960

1

2,927,311

PORTABLE CONTAINERS PROVIDED WITH THEFT ALARM DEVICES

Peter Donaldson, Staines, England, assignor to Security Products Manufacturing Company Limited, London, England, a British company

Application December 10, 1957, Serial No. 701,899

7 Claims. (Cl. 340—283)

This invention relates to portable containers such as bags, boxes or cases provided with theft alarm devices. Such containers are used, for instance, by bank messengers, wage clerks and others who are required to carry money or other valuables.

Portable containers provided with electrical theft alarm devices triggered off by release of a switch in the handle of the container are already known. Such devices are not without their drawbacks since it is easy for the person carrying the bag to release the switch inadvertently and so set off the alarm. Moreover, if the thief is aware that there is an alarm switch in the handle he may be able to seize the container in such a manner as to prevent release of the switch. Portable containers provided with electrical or mechanical alarm devices have been proposed in which a trigger string or wire is attached to the person carrying the container so that if the container is snatched from him the string or wire will be pulled and the alarm device actuated. Here again there are disadvantages since accidental triggering is easy, and if the thief is aware of the mechanism he may first sever the string or wire.

The present invention provides a portable container equipped with a theft alarm device which is not subject to the aforementioned disadvantages.

A portable container according to the present invention is equipped with a theft alarm device which is actuated on the interruption of an electric triggering circuit through which a current normally flows, and is adapted to be attached to the person carrying it by means of a frangible conductor forming part of the triggering circuit.

Thus, if a thief should snatch the container from the person carrying it, the frangible conductor will break, thereby interrupting the triggering circuit and actuating the alarm device. Inadvertent actuation of the alarm device by the person carrying the container is less likely than with an arrangement which relies on the person continually holding a switch against release, and if the thief should deliberately sever the frangible conductor he will interrupt the triggering circuit and actuate the alarm device.

The alarm device may take any suitable form, for instance it may be an audible warning device such as an electric horn or siren, or it may be a device which hampers the thief, such as a tear gas bomb.

Preferably, the container includes a lockable compartment containing a switch controlling the alarm device and the triggering circuit, the said switch having an "off" position in which no current flows and the alarm device is inoperative, and an "on" position in which a current flows through the triggering circuit. This compartment may be the same compartment as that which accommodates the valuables.

Preferably, the alarm device and the means for actuating it are contained in a tamper-proof compartment.

In one form of the invention the frangible conductor is adapted to be attached to the person who carries the container by a wrist strap, the conductor encircling the wrist when the strap is in place so that an attempt to remove the wrist strap will interrupt the triggering circuit and actuate the alarm device.

The triggering circuit preferably includes the winding of a relay which when energised by the current flowing through the triggering circuit holds open contacts in an actuating circuit of the alarm device and when de-energised by interruption of the triggering circuit permits the said contacts to close, thereby closing the actuating circuit of the alarm device.

Preferably, de-energisation of the relay also opens contacts in the triggering circuit so that the alarm device cannot be stopped by re-connecting the broken frangible conductor.

The invention may be performed in various ways and one particular form of container embodying the invention, namely a wages bag, will now be described by way of example with reference to the accompanying drawings, in which:

Figure 1 is a perspective view of the bag being carried;

Figure 2 is a view of the wrist strap in its open position;

Figure 3 is a sectional elevation of an inner strong box of the bag with the electrical connections omitted; and

Figures 4 to 7 are circuit diagrams showing respectively the connection with the switch in the "off" position, in an intermediate position and in the "on" position, and also when the frangible conductor has been broken. In Figures 5 to 7 the parts of the circuit through which a current is flowing are shown by heavy lines.

The bag shown in the drawing comprises an outer case **10** of leather, plastic or other suitable material, having a flap **11** secured by straps **12** and a lock **13**. A carrying handle **14** is attached to the flap **11**.

The case **10** contains a steel strong box **15** (shown in section in Figure 3) which has a hinged lid **16** provided with a stout lock **17**. The box is divided by a horizontal partition **19** into an upper compartment **20** and a lower compartment **21**. The upper compartment **20** contains a switch knob **22** and an indicator lamp lens **23**, and also accommodates the money when the bag is in use.

The lower compartment contains an electric battery **24** of substantial capacity, and an electric horn or siren or other alarm device **25**. The bottom of the box **15** may be perforated at **26** beneath the alarm device **25**, and the bottom of the case **10** may be similarly perforated, in order that the noise emitted by the alarm device shall not be muffled, but the perforations should be such that they do not expose any vulnerable part of the alarm device. The lower compartment **21** also contains an upright bracket **27** which supports an electric relay **28** and an indicator lamp **29** disposed immediately below the lens **23**. Switch mechanism **30** controlled by the knob **22** is also disposed in the lower compartment **21** and may be mounted on the bracket **27**. The parts **24, 25, 28, 29** and **30** are connected by electric wiring in a manner to be described, which wiring has been omitted from Figure 3 for clarity.

Part of the said wiring passes out through the wall of the box **15** and extends through a thong **31** provided with a readily-detachable plug and socket connector **32, 33** to a wrist band **34** which is shown in more detail in Figure 2.

The wrist band **34** includes conventional straps **35** and buckles **36** by which it can be fastened snugly round the wrist, and it also includes a tongue **37** provided at its end with a snap fastener socket **38** which is adapted to be snapped on to a stud **39** near the buckles **36**. The

plug 33 is of the coaxial type having a central conducting pin insulated from a conducting sleeve, these parts being connected respectively to conductors 40 and 41 embedded in the thong 31 and the wrist strap 34 and leading to the snap fastener socket 38 and the stud 39 respectively. Thus, when the strap is fitted around the wrist and the snap fastener 38, 39 secured, the conductors 40 and 41 are connected together. If, however, the wrist strap should be removed by releasing the snap fastener 38, 39, contact between the conductors 40 and 41 will be broken.

In the part of the thong 31 attached to the bag there are likewise two conductors connected respectively to a central socket portion and an outer sleeve portion of the socket 32.

Referring now to Figures 4 to 6, one pole of the battery 24 is connected by a wire 42 to one terminal 43 of one section 30*a* of the switch 30. Also connected to the terminal 43 is a wire 44 leading to a terminal 45 of another section 30*b* of the switch. The terminal 45 is connected through the indicator lamp 29 and a resistor 46 to a terminal 47 of a third section 30*c* of the switch. The other pole of the battery 24 is connected by a wire 48 to a terminal 49 of the switch section 30*c*. Also connected to the terminal 49 is a wire 50 leading to the movable contact of a pair of contacts 51 of the relay 28. The corresponding fixed contact is connected to the actuating winding 52 of the alarm device 25, the other end of this winding being connected to a contact 53 of the switch section 30*a*.

The terminal 49 of the switch section 30*c* is also connected by a wire 54 with one contact of the socket 32. The other contact of the socket 32 is connected to the moving contact of another contact pair 55 of the relay. The relay contacts are so arranged that the contacts 55 are closed when the contacts 51 are open, and vice versa. The fixed contact of the contact pair 55 is connected to a junction 56. From this junction one branch leads through the winding 57 of the relay 28 to a terminal 58 of the switch section 30*b*, while the other branch 59 is connected to a terminal 60 of the switch section 30*c*.

The bag is used and operated as follows. Assume that the container is being used by a wages clerk for drawing wages from a bank. He opens the case 10 and the strong box 15 on the bank counter. The switch knob 22 will now be in the "off" position, and since the terminals 43, 45, 47 and 49 are isolated within the switch 30 no current is flowing through any part of the circuit. He then puts on the wrist strap, if it is not on already, making sure that the snap fastener 38, 39 is properly connected. He also inserts the plug 33 into the socket 32, thereby closing the triggering circuit at this point. Current does not yet flow through the triggering circuit, however, since the relay contacts 55 are open, and moreover no connections have yet been established to the battery through the switch 30. He then turns the switch knob 22 to the "on" position.

In moving from the "off" position to the "on" position the switch 30 passes through an intermediate position in which connections are established as shown in Figure 5. In this intermediate position the terminals 45 and 58 of the switch section 30*b* are connected together, and the terminals 49 and 60 of the switch section 30*c* are connected together. A circuit is thus established from the battery 24 through the wire 42, the terminal 43, the wire 44, the link between the terminals 45 and 58, the energising winding 57 of the relay 28, the junction 56, the wire 59, the link between the terminals 60 and 49, and the wire 48 back to the battery. The relay 28 is thus energised, opening the contacts 51 and closing the contacts 55. Opening the contacts 51 introduces a further break into the alarm circuit which is already broken at the isolated switch terminal 53. Closing the contacts 55 causes a current to flow through the triggering circuit

from the battery 24, the wire 42, the terminal 43, the wire 44, the link between the terminals 45 and 58, the relay winding 57, the junction 56, the now closed relay contacts 55, the plug and socket connector 32, 33, the snap fastener connection 38, 39, the wire 54, the terminal 49, and the wire 48 back to the battery.

The second part of the movement of the switch towards the "on" position connects the terminals 43 and 53 of the switch section 30*a*, breaks the connection between the terminals 49 and 60 of the switch section 30*c*, and connects the terminals 47 and 49 of this switch section. A circuit is thus established from the terminal 45 to the terminal 47 through the indicator lamp 29 and the resistor 46, whereby the indicator lamp lights to indicate that the alarm device is now set. The clerk puts the money in the upper compartment 20 of the box, closes the lid 16 and locks it, and closes the flap 11.

When he wishes to remove the money he merely reverses the series of operations described and turns the switch back to the "off" position. This restores the circuit to the condition shown in Figure 4 and enables him to disconnect the plug and socket connector 32, 33 and remove the wrist strap without triggering off the alarm device.

However, should the bag be snatched from him or the thong 31 otherwise severed, or the wrist strap removed, the triggering circuit will be broken as shown in Figure 7. This de-energises the relay winding 57 so that the contacts 51 are closed and the contacts 55 opened. As soon as the contacts 51 are closed a circuit is established from the battery 24 through the wire 42, the link between the terminals 43 and 53, the actuating winding 52 of the alarm device, the closed contacts 51, the wire 50, the terminal 49 and the wire 48 back to the battery. The alarm device therefore operates and will continue to operate until either the box is unlocked and opened and the switch turned off, or until the battery runs down. The alarm device cannot be stopped by re-establishing contact between the two parts of the socket 32, since the relay contacts 55 in the triggering circuit are open.

What I claim as my invention and desire to secure by Letters Patent is:

1. A portable container, an alarm device disposed in said container, electrical actuating means for said alarm device, a source of electric current, a normally interrupted electric actuating circuit including said actuating means and said source of electric current such that closure of said actuating circuit sets off said alarm device, a normally closed electric triggering circuit, contact means for closing said actuating circuit on interruption of said triggering circuit, a wrist strap, a conductor in said wrist strap terminating in separable contacts adapted to be connected together when said wrist strap is in a closed condition to complete a conductive loop, and frangible conductors connecting said container to said wrist strap, said conductive loop in said wrist strap and said frangible conductors forming part of said triggering circuit.

2. A portable container according to claim 1 in which said frangible conductors include a double contact plug and socket connector, said plug being a push fit in said socket and separable from said socket by a direct pull.

3. A portable container according to claim 1 comprising walls and an openable cover defining a compartment in said container, a lock for holding said cover in its closed position, a switch controlling said actuating circuit and said triggering circuit and having an off position in which switch contacts in said triggering circuit and said actuating circuit are open and an on position in which said switch contacts in said triggering circuit are closed and a control member for said switch disposed in said compartment.

4. A portable container according to claim 3, which includes walls defining a second compartment separated from said lockable compartment, said alarm device, said

source of electric current and said actuating circuit being accommodated in said second compartment.

5. A portable container according to claim 1, in which said triggering circuit includes the winding of a relay which is energised by the current normally flowing through said triggering circuit, and relay contacts in said actuating circuit which are held open when said relay winding is energised and which close when said relay winding is de-energised.

6. A portable container according to claim 5, in which said triggering circuit includes relay contacts adapted to open when said relay winding is de-energised.

7. A portable container according to claim 1, in which said alarm device gives an audible signal on closure of said actuating circuit.

References Cited in the file of this patent

UNITED STATES PATENTS

1,747,194	Thomas	Feb. 18, 1930
2,686,909	Poulson	Aug. 17, 1954

FOREIGN PATENTS

404,727	Great Britain	Jan. 25, 1934
1,011,667	France	June 25, 1952

UNITED STATES PATENT OFFICE

CERTIFICATE OF CORRECTION

Patent No. 2,927,311 March 1, 1960

Peter Donaldson

It is hereby certified that error appears in the above numbered patent requiring correction and that the said Letters Patent should read as corrected below.

In the heading to the printed specification, between lines 10 and 11 thereof, insert -- Claims priority, application Great Britain December 19, 1956 --.

Signed and sealed this 29th day of November 1960.

(SEAL)
Attest:

KARL H. AXLINE
Attesting Officer

ROBERT C. WATSON
Commissioner of Patents