Dec. 1, 1959 B. CRIST 2,915,278

FAUCETS

Filed Oct. 17, 1955 3 Sheets-Sheet 1

FIG. 3

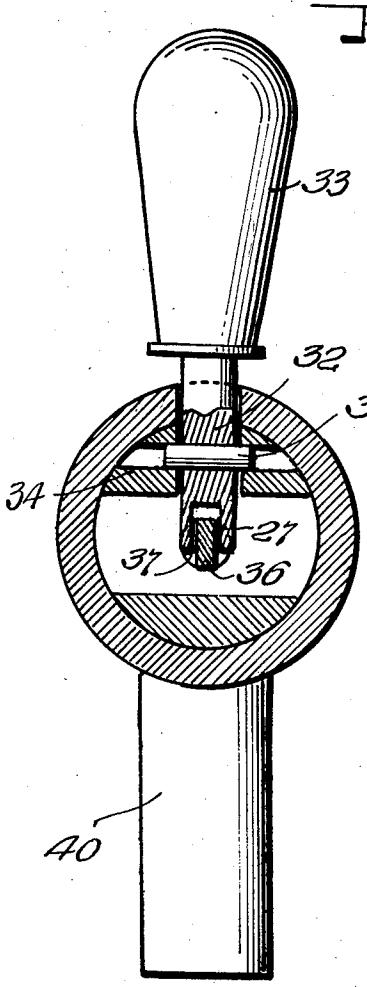


FIG. 4

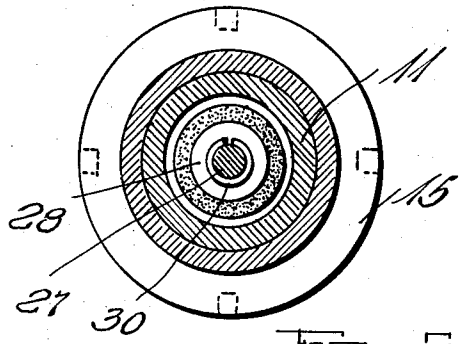


FIG. 5

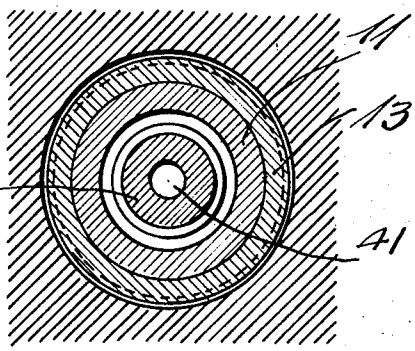


FIG. 6

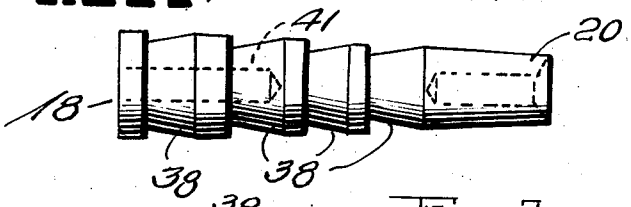


FIG. 7

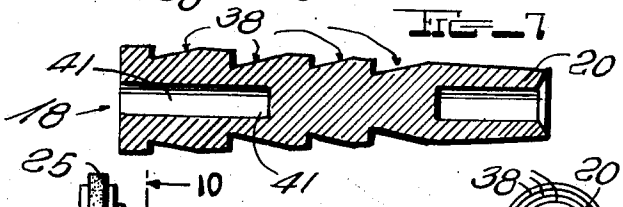


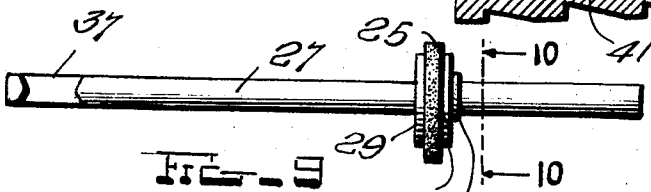


FIG. 8

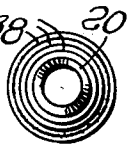


FIG. 9

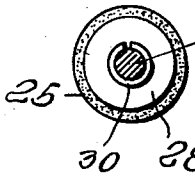


FIG. 10

INVENTOR

BUCKLEY CRIST,

BY E. Wilson Corder

ATTORNEY

Dec. 1, 1959 B. CRIST 2,915,278

FAUCETS

Filed Oct. 17, 1955 3 Sheets-Sheet 2

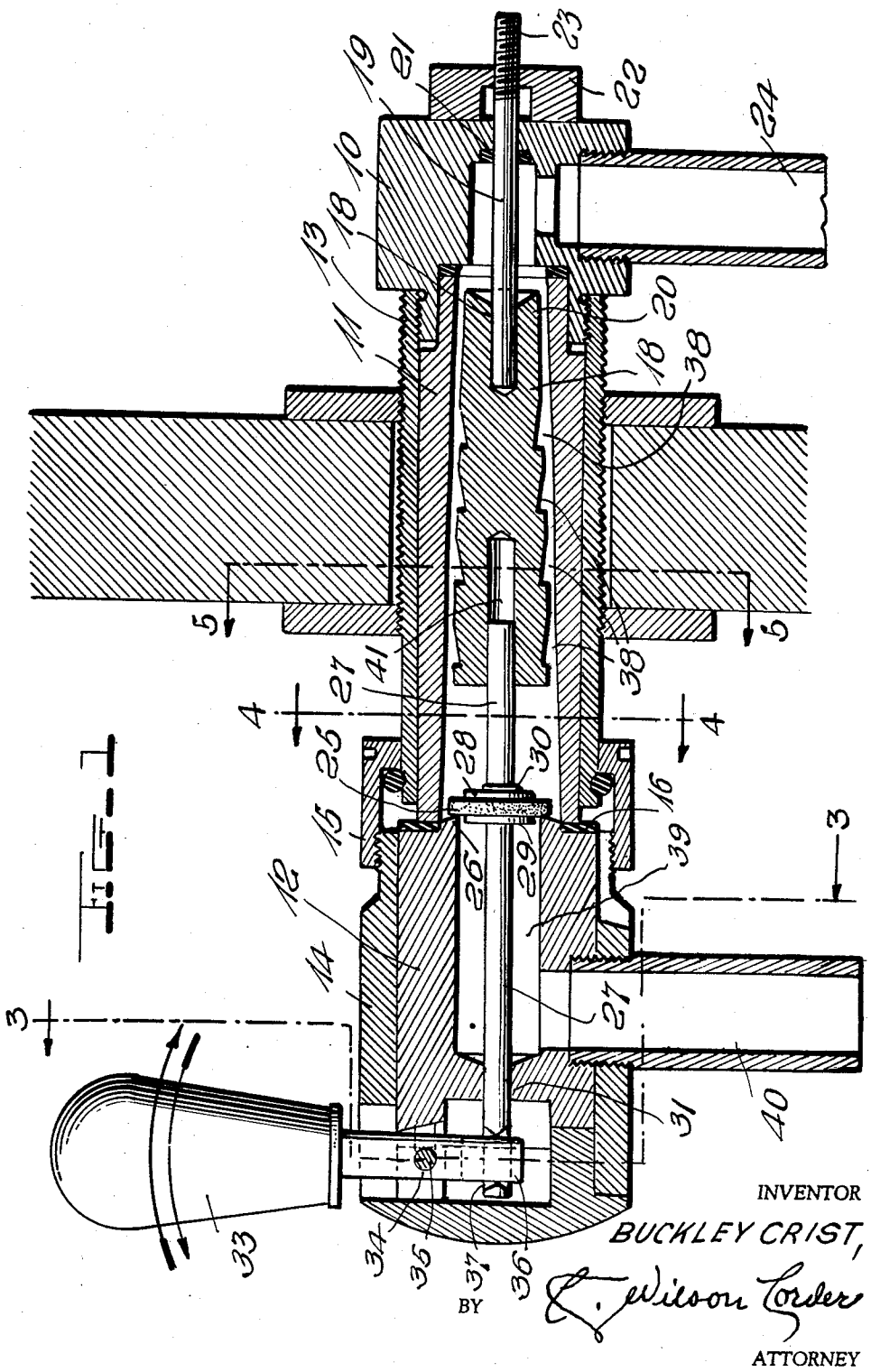


INVENTOR

BUCKLEY CRIST,

BY E. Wilson Lorder

ATTORNEY

Dec. 1, 1959 B. CRIST 2,915,278

FAUCETS

Filed Oct. 17, 1955 3 Sheets-Sheet 3

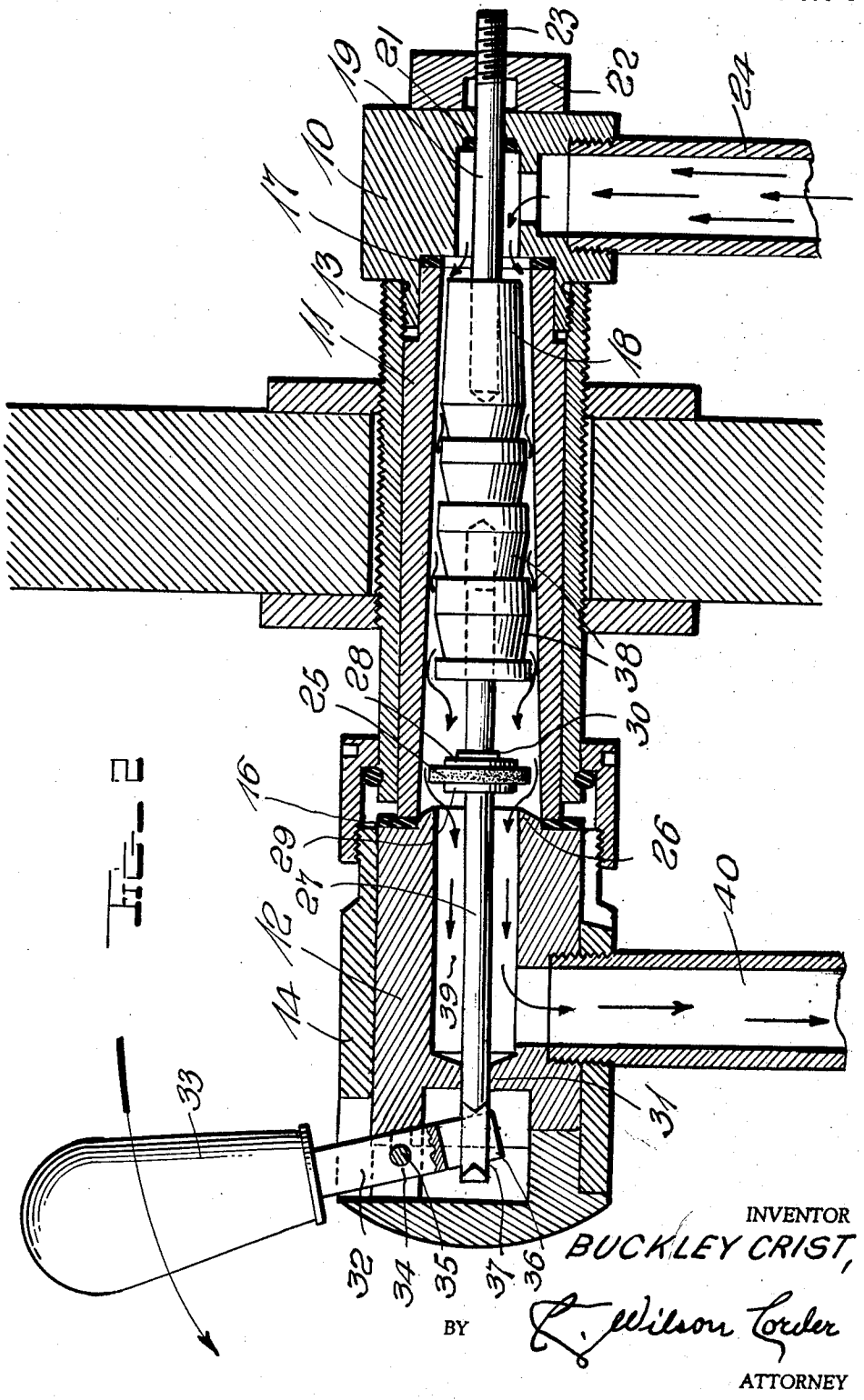


INVENTOR
BUCKLEY CRIST,
BY R. Wilson Corder
ATTORNEY

United States Patent Office

2,915,278

Patented Dec. 1, 1959

1

2,915,278

# FAUCETS

Buckley Crist, Muncie, Ind., assignor, by mesne assignments, to The Coca-Cola Company, New York, N.Y., a corporation of Delaware

Application October 17, 1955, Serial No. 540,895

5 Claims. (Cl. 251—122)

This invention relates to valves, and more particularly to a new and improved faucet contemplated to be used primarily in the dispensing of carbonated beverages or other fluids such as beer, where the presence of carbonic gas tends to produce undesirable foaming at the time the liquid emerges from container or line pressure to atmospheric.

Restricting flow and creating pressure drop with a short fluid path as is necessary in the case of a nozzle, requires a small cross-sectional area which in turn tends to generate high velocity of fluid being dispensed. Various methods have in the past been used to decelerate such fluid without undue turbulence, creation of negative pressures, or otherwise generating foam with resultant loss of carbonation. Such methods include exiting the high velocity stream into a comparatively large pool of fluid which in effect "drowns" the high velocity stream; gradually enlarging the cross-sectional area with tapering passages; and the employment of various chokes, restrictors, and other elements providing a large degree of surface upon which energy may be used up in friction.

The instant invention employs new and novel means in effecting the desired result, and may be said to consist essentially of a series of nozzles in tandem, of increasing cross-sectional area; fluid in effect being alternately accelerated, and decelerated. It is accelerated past the nozzle, thereby converting pressure energy into kinetic energy; and then after leaving the nozzle it enters a passage of expanding cross-sectional area where the liquid decelerates, converting velocity energy back to pressure energy, with a desired loss of efficiency. This means that the fluid at the next lower pressure accelerates more slowly through the next nozzle, which is of larger area, and leaving the last of the series flows slowly and quietly without the foaming which would be fatal to automatic vending operations, which are becoming increasingly popular today, as for example, dispensing a measured quantity of a carbonated beverage into a paper cup. If foaming occurs during this operation, there is an uneconomic overflow of beverage, resultant sanitation and other problems; whereas if a cup sufficiently large to prevent this is employed, there is a substantial waste of stock and space within the machine, as well as potential dissatisfaction on the part of the customer who may feel that he has been cheated when he receives a cup that is substantially less than full when the foam has subsided.

In the present invention, the liquid in effect, passes a series of venturi orifices. The sharp edges of the flow restrictor should be rounded off to a radius of approximately .005 inch to prevent formation of "vena contracta"; and the angle of the tapered passage following the orifice should be from 10° to 14°. It has been found that the rate of increase of cross-sectional area of an annular passage of 14° taper is the same as that of a conical nozzle of 3½° taper (7° included angle), which is considered the maximum desirable angle for venturi orifices.

An object of this invention is to provide a faucet which

2

will prevent foaming in the dispensing of a carbonated beverage.

Another object is to provide simplicity of construction in such a device.

Another object is to make possible ease of access for cleaning and servicing.

A still further object is to make possible flexibility in such a faucet, in keeping with its intended use.

Another object is to make possible conservation of space in such an instrumentality.

Another object is to conserve materials.

These and other objects made possible by subject faucet are accomplished by means of the instant invention, a full and complete understanding of which is facilitated by reference to the drawings herein in which:

Fig. 1 is a view in vertical longitudinal cross-section of a valve embodying this invention;

Fig. 2 is a view similar to Fig. 1, in which the faucet is open however, and in which the restrictor element and some of its associated structure is shown by a side view;

Fig. 3 is a vertical sectional view taken substantially along the line 3—3 of Fig. 1, looking in the direction of the arrows;

Fig. 4 is a vertical sectional view taken along the line 4—4 of Fig. 1;

Fig. 5 is a similar view taken substantially along the line 5—5 of Fig. 1;

Fig. 6 is a side view of the instant flow restrictor;

Fig. 7 is a vertical longitudinal sectional view of the structure of Fig. 6;

Fig. 8 is an end view of the device of Fig. 6;

Fig. 9 is a side view of the valve stem and valve seal which are part of the instant structure; and

Fig. 10 is a partial sectional view taken along the line 10—10 of Fig. 9 and showing said seal in place on the valve stem.

Like numerals indicate corresponding parts throughout the various figures of the drawings.

Referring now to said drawings, the instant dispensing valve comprises an elbow **10**, with which is associated a tube **11** and a body portion **12**, all preferably fabricated from a plastic material and held together under compression by a sleeve **13**, a shroud **14**, and a lock ring **15**, which engage conventional threads to compress rubber seals **16** and **17**, thereby producing a pressure-type assembly.

Positioned within tube **11** is a flow restrictor **18** likewise preferably fabricated of plastic, which is held in place by an adjusting rod **19** which may be embedded in one end **20** of element **18**. Adjusting rod **19** extends through a gland **21** formed in **10**, and may be moved lengthwise by rotating adjusting nut **22** on the threaded end **23** of rod **19**. A connection to a beverage supply under pressure is made through line **24**, initial flow being stopped by the seating of rubber seal **25** on the valve seat **26** of body member **12**. Said seal is secured to a valve stem **27** by a plurality of stainless steel washers **28** and **29** and a snap ring or rings **30** which may ride or anchor in suitable grooves provided in valve stem **27**.

Said stem passes through a hole **31** in body **12** and at its outer end is engaged by a lever **32** having an operating handle **33** affixed to its upper portion. The lever is pivoted at **34** by means of a transverse pin **35** which is supported in conventional bearings at the end of the shroud, said lever being slotted as at **36**, and stem **27** is grooved at **37** to engage said lever whereby the rotation thereof about its pivot **34** causes valve element **25** to move from its seat, thereby allowing beverage to flow through the system.

Special attention is now directed to flow restrictor **18**, it first being noted that the bore of tube **11** follows a uniform straight taper. The flow restrictor has the same

taper as the tube in its gross aspects for about half its length, the remainder being cylindrical. The exterior surface of said restrictor is provided with one or more steps or notches **38**, which provide in effect a series of annular nozzles, the first several of which within a series being of the same cross-sectional area, and the nozzles that follow achieving greater cross-sectional area as the distance between the inner wall of tube **11** and the outer surface of the flow restrictor increases.

Beverage entering at **24** moves through the annulus formed by the flow restrictor and the tube, the series of rstrictions caused by the shape of the flow restrictor causing a loss of pressure in the carbonated beverage. The amount of this loss and consequently the flow rate can be adjusted by moving flow restrictor **18** longitudinally in the tapered tube in the manner described heretofore. Moving said restrictor towards inlet **24** decreases the flow rate.

The beverage leaving the annulus caused by the flow restrictor tube fills the volume ahead of the valve opening and moves at a relatively low velocity and at approximately atmospheric pressure, flowing by valve seat **26** into bore **39** and filling it, after which the fluid flows out through spigot **40**, and likewise filling that. At the discharge end of the spigot, it flows in a quiet stream, tests having shown that the beverage can fall from 3 to 12 inches into a receptacle without undue turbulence and foaming. The valve stem **27** moves slideably within bore **41** in the discharge end of restrictor **18** which arrangement supports the ends of the valve stem and the flow restrictor and maintains their alignment.

The entire valve can be easily disassembled for sanitizing and service purposes by unscrewing the lock ring **15**, upon which shroud **14** containing body member **12** and valve stem **27** can be disconnected, and the body removed from the shroud, releasing element **35** so that lever **32** can be withdrawn and said valve stem removed. It is readily apparent that the remaining elements can be broken down completely.

Experiments have been made with from 1 to 14 steps or nocthes **38** formed in a flow restrictor such as **18**, and good results have been obtained in all cases, it being apparent however that the optimum number will depend on the particular circumstances of use and the results desired. For example, in a cup vending machine where the flow rate is constant, and a casual drink from the faucet when such is as hot as 100° Fahrenheit must be served, a single small step with a 12° angle and .02 inch deep in the flow restrictor, in combination with the exponentially flared tube **11** gave best results. The manual faucet illustrated, which uses a tapered bore and flow restrictor to allow for variable pressures and flow rates, works best with 4 or 5 steps or notches such as **38**. The ratio of area of the smallest or throat area to the largest area ahead of the next throat, should be 1 to 3, or less, the smaller the ratio, the greater the pressure loss. The flow restrictor is cut off at its downstream end **42** at a 90° angle, experience having shown that such treatment is superior to a tapered or streamlined end.

It will also be apparent that the instant valve may be constructed in such a manner that the notches are formed in the inner surface of the tube **11** and the flow restrictor **18** left smooth, this being a mere reversal of parts and basic hydraulic functions being in no way disturbed thereby.

From the foregoing, it is apparent that there has been shown and described a faucet of superior design which decelerates high velocity fluid with a minimum of loss of carbonation, and without foaming. That said valve is economical in its space requirements, with particular reference to the volume of fluid being handled. That said device is easy to service and clean, susceptible of manufacture with a minimum of production difficulties, and thoroughly desirable for its intended purposes. It will be further noted that the small volume of fluid remaining in the faucet at the end of a draw, together with the fact that it is preferably fabricated of a poor heat conducting plastic, permits the faucet to operate successfully without the necessity of being refrigerated.



While there has been shown a specific embodiment of the instant invention herein, and such described in detail, it is understood that no limitation is implied thereby, but on the contrary the appended claims are to be given an interpretation and scope fairly in keeping with the contribution to the art.

I claim:

1. In a faucet for dispensing carbonated beverages, a hollow tube, a flow restrictor positioned within said tube having an outer surface opposed to the inner surface of the tube, a notch formed in one of said surfaces, said notch having a tapered portion providing a gradually increasing cross-sectional area of the space between said surfaces, the tapered portion of said notch terminating in a plane radial portion at which the cross-sectional area of the space between said surfaces is abruptly reduced, a fluid inlet to the tube, a valve positioned within said tube, means for actuating said valve, and a discharge outlet communicating with said tube.

2. In a device for dispensing carbonated beverages, a tubular member having a bore, a fluid inlet adjacent the upstream end thereof, a valve adjacent the downstream end thereof and an outlet downstream from said valve, and a flow restrictor within said bore and substantially concentric therewith, said flow restrictor and said bore having juxtaposed surfaces with the cross-sectional area of the clearance space between said surfaces increasing in the direction of flow of fluid through said bore, at least one notch formed in one of said surfaces, said notch having a conical tapered portion providing a gradually increasing cross-sectional area of said clearance space in the direction of fluid flow and terminating in a plane radial portion at which the cross-sectional area of the clearance space is abruptly reduced, the intersection of the tapered portion and the radial portion being an acute angle, and means for actuating said valve without moving said flow restrictor.

3. In a device for dispensing carbonated beverages, a tubular member having a tapered bore, a fluid inlet adjacent the upstream end thereof, a valve adjacent the downstream end thereof and an outlet downstream from said valve, the diameter of said bore increasing in the direction of flow of fluid therethrough, and a flow restrictor within said bore and substantially concentric therewith, said flow restrictor and said bore having juxtaposed surfaces having the same taper, at least one notch formed in one of said surfaces, said notch having a conical tapered portion providing a gradually increasing cross-sectional area of said clearance space in the direction of fluid flow and terminating in a plane radial portion at which the cross-sectional area of the clearance space is abruptly reduced, the outer edge of said radial portion having a radius of approximately 0.005 inch.

4. In a device for dispensing carbonated beverages, a tubular member having a bore, a fluid inlet adjacent the upstream end thereof, a valve adjacent the downstream end thereof and an outlet downstream from said valve, and a flow restrictor within said bore and substantially concentric therewith, said flow restrictor and said bore having juxtaposed surfaces with the cross-sectional area of the clearance space between said surfaces increasing in the direction of flow of fluid through said bore, a plurality of notches formed in one of said surfaces, each of said notches having a tapered portion providing a gradually increasing cross-sectional area of said clearance space in the direction of fluid flow and terminating in a plane radial portion at which the cross-sectional area of the clearance space is abruptly reduced, the intersection of said tapered portion and said radial portion being an acute angle.

5. In a device for dispensing carbonated beverages, a

tubular member having a tapered bore, a fluid inlet adjacent the upstream end thereof, a valve adjacent the downstream end thereof and an outlet downstream from said valve, the diameter of said bore increasing in the direction of flow of fluid therethrough, and a flow restrictor within said bore and substantially concentric therewith, said flow restrictor having a tapered portion corresponding substantially with the taper of said bore, the surface of said flow restrictor having a plurality of notches formed therein, each of said notches having a tapered portion providing a gradually increasing cross-sectional area of said clearance space in the direction of fluid flow and terminating in a plane radial portion at which the cross-



sectional area of the clearance space is abruptly reduced, the intersection of said tapered portion and said radial portion being an acute angle, the downstream end of said flow restrictor being cut off substantially perpendicular to the axis thereof.


**References Cited** in the file of this patent

UNITED STATES PATENTS

| | | |
|---|---|---|
| Re. 17,824 | Lee | Oct. 14, 1930 |
| 1,919,232 | Lee | July 25, 1933 |
| 2,162,842 | Dolison | June 20, 1939 |
| 2,461,909 | McClure | Feb. 15, 1949 |
| 2,564,287 | Stephany | Aug. 14, 1951 |