Sept. 29, 1959 S. W. SPEERS 2,906,205

HUMIDIFIER AND CONTROL SYSTEM

Filed Aug. 2, 1955 3 Sheets-Sheet 1

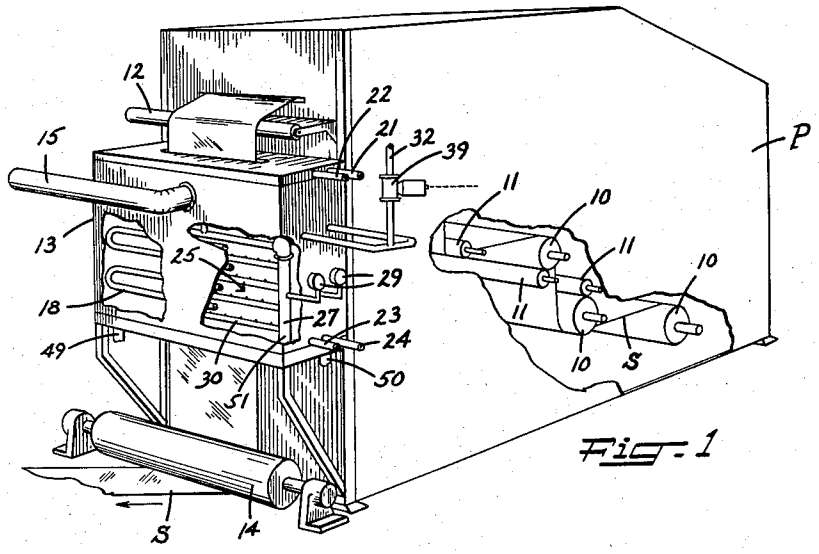

Fig. 1

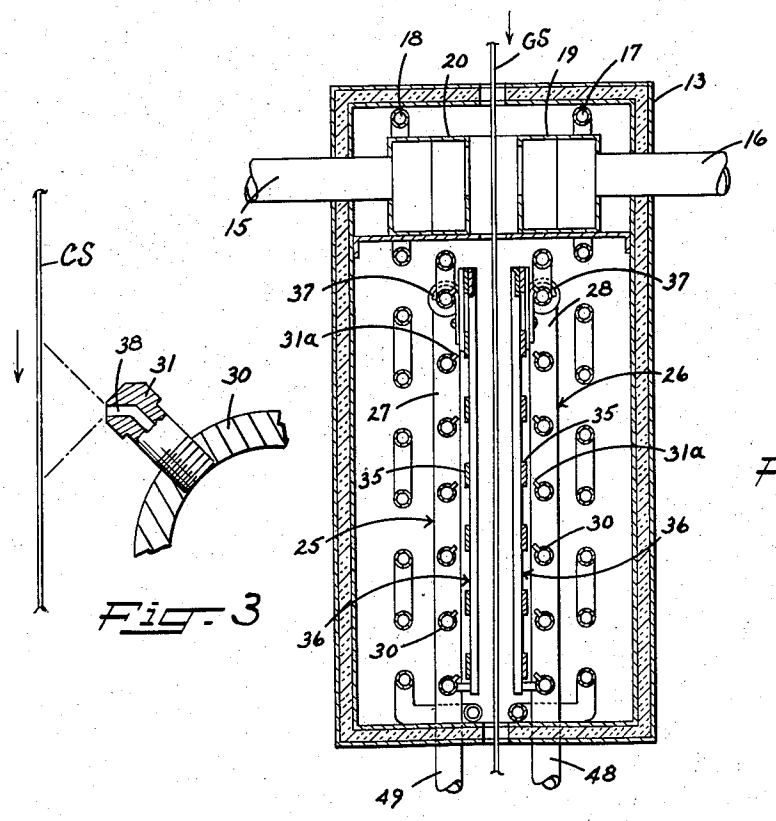

Fig. 2

Fig. 3

HUMIDIFIER AND CONTROL SYSTEM

Filed Aug. 2, 1955 3 Sheets-Sheet 2

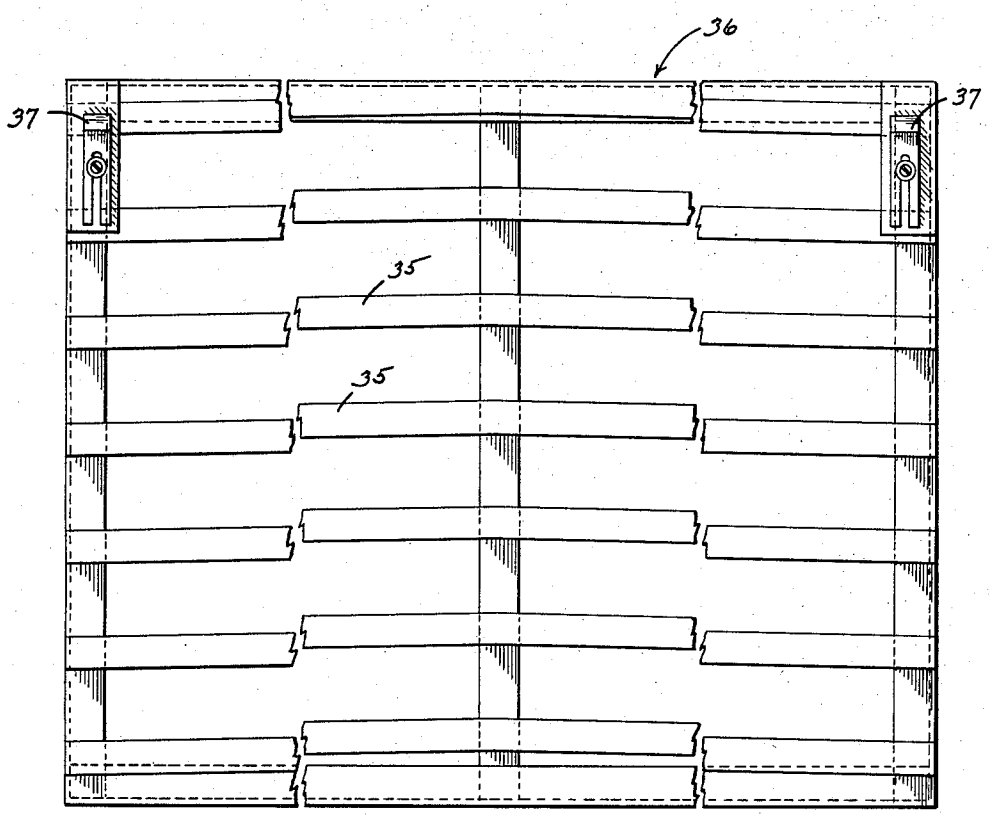

Fig. 4

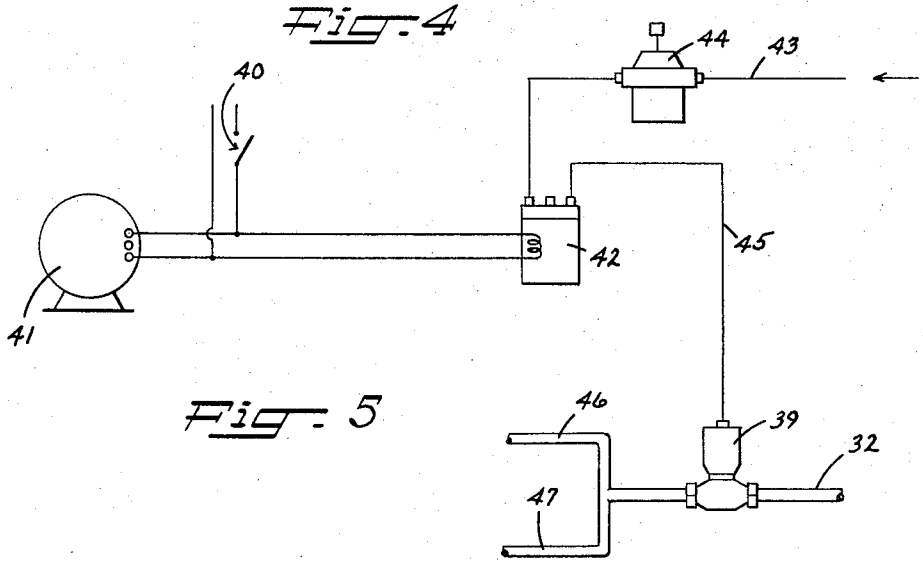

Fig. 5

HUMIDIFIER AND CONTROL SYSTEM

Filed Aug. 2, 1955 3 Sheets-Sheet 3

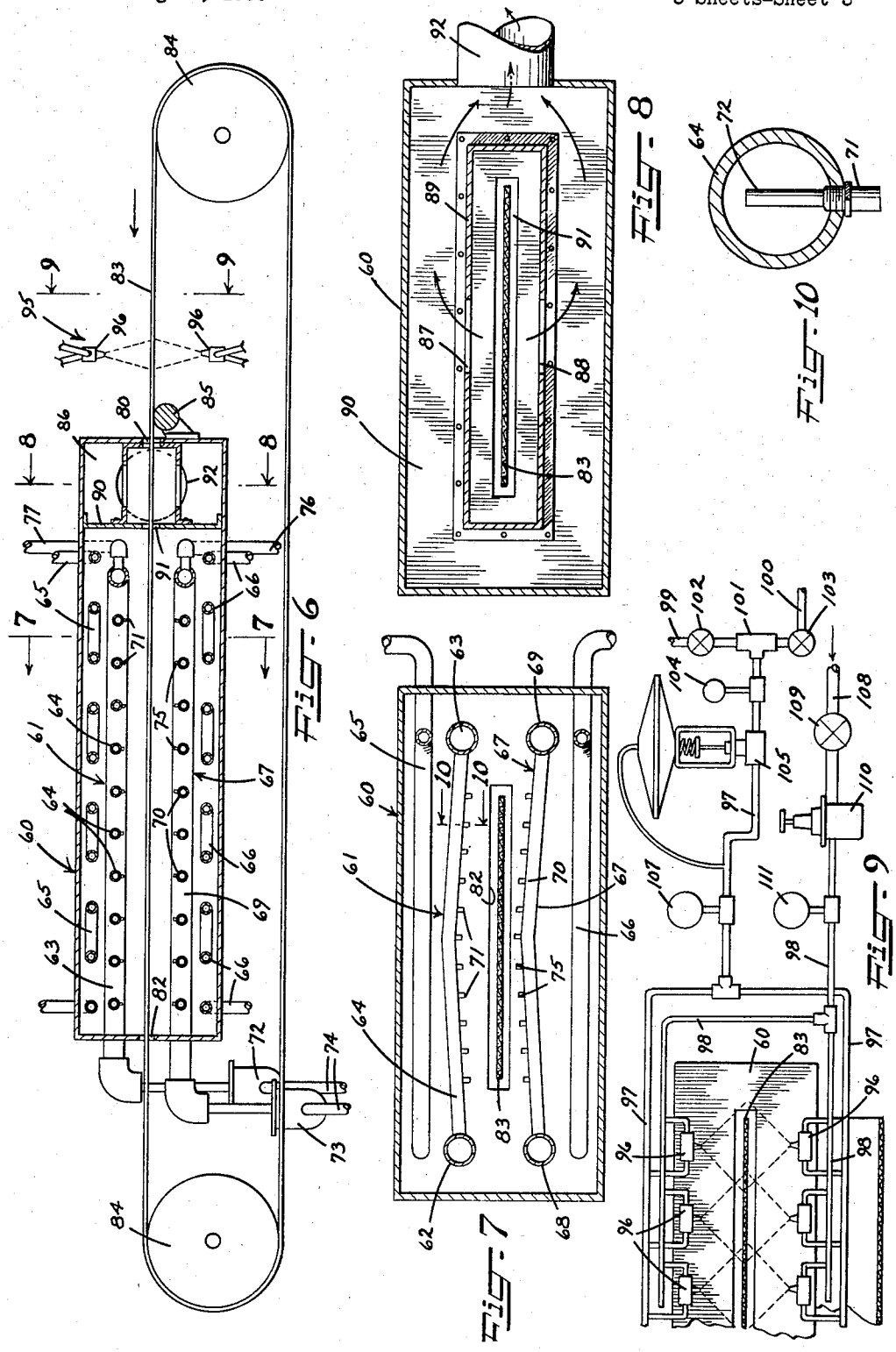

United States Patent Office

2,906,205

Patented Sept. 29, 1959

1

2,906,205

HUMIDIFIER AND CONTROL SYSTEM

Stewart W. Speers, Upper Darby, Pa., assignor to American Viscose Corporation, Philadelphia, Pa., a corporation of Delaware

Application August 2, 1955, Serial No. 525,979

11 Claims. (Cl. 101—416)

This invention relates to apparatus for applying moisture to traveling objects and especially to the humidifying of running webs of sheet material.

Various materials and articles containing moisture lose moisture during manufacture, conversion and use so that moisture has to be restored to facilitate their handling and use. For example when paper and cellophane are manufactured, it is frequently not possible to control the drying of the sheet so that the moisture content of the product has the desired value. When paperboard is to be creased and folded for box manufacture, the moisture content must be controlled or otherwise the board may crack. Paper caps and paper containers must have a regulated moisture content to enable them to have required dimensions. Further, textile fabrics, leather and the like must have controlled moisture content for proper finishing, cutting and sewing. In addition when any of the hydrophilic materials is printed or coated with inks or lacquers that require heat for hardening and drying, there is always a loss of moisture in the base material which must be restored.

In general the apparatus of the present invention comprises a chamber having means to pass the hydrophilic material therethrough, means to spray steam on the materials as they pass through the chamber and means to control the steam spray when the materials stop or are stopped during their passage through the chamber so that the material will not become over-humidified or wet by such halt in movement. In one embodiment, for use with materials in web form, the chamber may be positioned either vertically or horizontally and in a second embodiment, for use with materials in pieces, such as sheets, parts, and shaped bodies, the chamber is provided with a substantially horizontal porous endless belt upon which the pieces are supported during passage through the chamber.

The invention is capable of humidifying or rehumidifying any moisture-containing material, such for example as paper and paperboard, whether made by the kraft or sulfite or other process, also glassine, textiles containing hydrophilic fibers, leather and hydrophilic films such as films made of cellophane and cellulose ethers of the alkali-soluble or water-soluble type, alginates, casein, glue and the like. The material to be treated may be in the form of a web, tube, band, ribbon, strip and the like, or in the form of individual sheets, pieces, parts, bags, shaped bodies and laminated structures formed in whole or in part of any of the moisture-containing materials above given.

In the printing of varicolored designs and lettering on package wrappers, a multicolor printing press is used which has, in addition to the printing rolls, hot air blowers and/or heated rolls located at suitable points for drying the various inks. This drying operation, which of necessity is performed in or at the printing press, reduces the moisture content of the wrapper substantially below that which is considered a desirable minimum. It is quite important therefore to raise the moisture content to its initial or proper amount as soon as the ink on the printed paper has been sufficiently dried. In the case of cellophane and glassine, the moisture content should be approximately 6%. Furthermore, in the case of glassine, it becomes necessary to prevent direct impingement on the sheet of steam from the jets or nozzles in the humidifier.

2

One embodiment of the present invention includes a chamber positioned adjacent to or directly on the framework of a printing press through which a running web of cellophane, glassine or other wrapping material travels. The web, after passing through the printing rolls and their associated drying apparatus, is carried from top to bottom through the humidifying chamber. The upper section of the chamber has suitable ducts for exhausting steam and air from the chamber. A series of coils in the remaining part of the chamber is provided with jets which maintain a saturated atmosphere in the chamber due to the steam which is expelled therefrom. Condensate is carried from the chamber through suitable liquid conduits. The steam is introduced to the jets in the chamber through a steam line controlled automatically by the printing press.

A particular problem was encountered in conjunction with the use of humidifiers on printing presses because it is necessary to "jog" the press in order to obtain proper registry of the sheet with the various printing rolls when multicolor printing is done. It was found that if the steam valve was open when the press was shut down or being jogged sufficiently to permit quantities of steam to be directed against a comparatively stationary wrapping sheet, the wrapper would be ruined because this would strip the coating from the sheet. It therefore became imperative to make certain that no steam would come in contact with the printed sheet unless the sheet were traveling through the humidifier or chamber at a minimum rate. This requirement, of course, involved controlling the steam valve simultaneously with the main motor of the printing press so that no steam could possibly enter the humidifying chamber unless the press were running. It did not, however, solve the proper operation of the humidifier under conditions of jogging mentioned above. When a solenoid actuated valve was tried in the steam line which was responsive to the printing press motor circuit, it was found that this valve acted so quickly that the safety valve in the steam line "popped" whenever the press was jogged. Furthermore, even though care was taken not to open the safety valve, it was found that enough steam could be discharged into the chamber to damage the film even though the sheet might pass through the chamber in small increments.

In an attempt to introduce greater delay with regard to the actuation of the steam valve when the printing press was jogged, a motor driven valve was tried in the steam line. The time lag, however, proved so great that substantial footage of paper sheet passed through the chamber without proper humidification and when the press was shut down steam continued to flow into the chamber so that the paper running through or near the end of a run was spoiled by an excessive amount of steam. As a result, a pneumatic valve of the type shown herein was found to be the only satisfactory device for controlling the steam valve in response to closing of the press motor circuit which would take care of the required conditions of normal press operation and also of jogging. To insure that even with an unusual amount of jogging undesired steam will not be introduced into the chamber, I have provided large vertical headers and sloped horizontal runners for the steam so that small initial amounts of steam which might be introduced to the steam coils as a result of jogging would condense and be removed in

the form of condensate rather than be introduced into the chamber as steam.

When it is desired to humidify paper products such as milk bottle caps, cartons or any other disconnected group of objects, I provide the humidifier chamber with a horizontal conveyor belt on which the objects to be treated are deposited either manually or mechanically. For certain articles, it may be desirable to add auxiliary air and water spray before the articles enter the humidifier chamber.

A primary object of the invention therefore is to provide an improved humidifier for applying controlled amounts of moisture to continuously moving objects.

A still further object of the invention is to provide an improved humidifier for applying relatively large amounts of moisture to moving objects.

A further object of the invention therefore is to provide an improved humidifier suitable for restoring the humidity to running webs of sheet material.

A further object of the invention is to provide a humidifier for running webs of sheet material capable of being actuated in conjunction with a multicolor printing press.

A further object of the invention is to provide a baffle for a humidifier and special nozzles for preventing steam from impinging directly upon a sheet running therethrough.

A still further object of the invention is to provide an improved control system for a humidifier of the class described.

Further objects will be apparent from the specification and drawings in which:

Figure 1 is a perspective partly broken away showing a printing press having the humidifier of the present invention installed thereon;

Figure 2 is a vertical sectional view through the humidifier of Figure 1;

Figure 3 is an enlarged sectional detail showing a modified form of nozzle;

Figure 4 is an elevation of the baffle;

Figure 5 is a schematic view showing the control system for the humidifier;

Figure 6 is a side elevation of a modified form of humidifier suitable for use with a horizontal conveyor;

Figure 7 is a transverse section as seen at 7—7 of Figure 6;

Figure 8 is a transverse section as seen at 8—8 of Figure 6;

Figure 9 is a sectional detail as seen generally at 9—9 of Figure 6 showing, in addition, the control system for the auxiliary sprays; and

Figure 10 is an enlarged sectional detail of one of the runners in the upper assembly as seen at 10—10 of Figure 7.

The invention comprises essentially the provision of a chamber having a slot in its top and bottom walls through which the running web of sheet material passes. The upper part of the chamber is provided with exhaust ducts which withdraw excess steam and saturated air from the chamber, thus preventing condensation. The web then passes between oppositely facing vertical banks of tubing formed of headers at each end and horizontal runners connecting the headers which in turn have rows of jets or nozzles directed towards the path of sheet travel. The control system incorporates a pneumatic valve in the steam line which is responsive to the main switch for opening and closing the circuit to the printing press. In a modified form, the chamber is positioned to accommodate a horizontal pass instead of a vertical pass of material to be treated so that objects which have already been cut or shaped can be positioned on a horizontal conveyor and passed through the humidifier.

As shown in Figs. 1 to 5, a multi-color printing press P suitable for use with the invention is provided with the conventional printing and drying rolls **10**, **10** and **11**, **11**. The web S, which may be in the form of a sheet of paper, glassine, cellophane or any other convenient material on which printing is to be done, passes from the printing press and is carried over a guide roll **12**. The web then travels downwardly through the humidifier chamber or housing **13** and around a cooling roll **14**. The housing **13** is provided with exhaust ducts **15** and **16** through which air and excess steam are withdrawn from the chamber. Steam coils **17** and **18** surround the elongated intake sections **19** and **20** of the ducts to maintain the atmosphere at a sufficiently elevated temperature to avoid undesired or excessive condensation. Saturated steam is introduced to coils **17** and **18** through the inlets **21** and **22** respectively and condensate or saturated steam is exhausted from the coils through pipes **23** and **24**. A second bank of steam coils is positioned in the housing **13** between the horizontal coils **17** and **18** and the traveling web S. These banks **25** and **26** comprise vertical headers **27**, **27** and **28**, **28** having pressure gauges **29**, **29**. The horizontal steam lines or runners **30**, **30** connecting the headers are provided with jets **31**, **31** (Figure 3) through which the steam introduced to the headers through steam line **32** is forced directly onto the web CS or indirectly onto the sheet GS as shown in Figure 2. Since the steam cannot be impinged directly upon the very absorbent material such as glassine, I utilize jets **31***a*, **31***a* which direct the steam upwardly at an angle of approximately 45° against the lateral slats **35**, **35** of a baffle assembly **36** as shown in Figure 4. The horizontal steam conduits are bent slightly downward at each end to prevent accumulation of condensate in the lines. The baffle slats **35** are similarly shaped so that they are in alignment with the jets **31***a*.

For humidifying textiles, cellophane, sulfite or kraft paper, the steam may impinge directly onto the sheet. In this case, the baffle sections **36**, **36** can be readily removed from in front of the banks **25** and **26** since the baffle assemblies are supported from the uppermost horizontal runner by adjustable hangers **37**, **37**. If direct impingement of the steam normal to the sheet is desired, the jets **31***a* may be replaced with jets **31** having an angled bore **38** which has a horizontal outer terminus so that steam is directed horizontally and generally at right angles against the sheet CS (Figure 3).

Saturated steam for both banks **25** and **26** is admitted to the top headers through steam line **32** and valve **39**. The main switch **40** (Figure 5) for starting the printing press motor **41** also controls the opening and closing of valve **39** through an electro-pneumatic relay **42** connected to air line **43** through a combined pressure regulator and air filter **44**. The discharge air line **45** from relay **42** is connected to the pneumatic coil valve **39** so that when switch **40** is closed the valve **39** will eventually open to admit steam into the upper header lines **46** and **47**. It will be understood that there is a delay of several seconds between the time that switch **40** is closed and the actual entry of steam into lines **46** and **47**. For quick jogging, namely, opening and closing of switch **40** for purposes of registering the sheet S on the various printing rolls, this lag may be sufficient to prevent opening of valve **39** to such an extent that steam will be emitted from jets **31** or **31***a*. However, even though small amounts of steam should be admitted through valve **39**, this steam would condense in the headers **27** and **28** before sufficient pressure would be built up to emit any steam from the nozzles. In this connection, it will be noted that the jets or nozzles **31** and **31***a* are positioned above the centers of the horizontal runners **30** which feature serves as an additional precaution against the premature or undesired admission of steam into the chamber during jogging. Condensate in the banks **25** and **26** and headers is removed from the humidifier through four large exhaust lines **48**, **49**, **50** and **51**. The switch **40** therefore must be closed for a substantial period of time before steam will be applied to the sheet. This time should not exceed twenty seconds. Otherwise, sufficient humidification will not take

place but there should be enough lag to permit jogging of the press without applying any steam to the sheet.

It will thus be understood that I have provided an improved accessory for multicolor printing presses which permits the required humidity of approximately 6–7% to be added to the running sheet of film immediately after it has been printed. The humidifier is simple and readily adapted to treating different types of wrapping material such as cellophane and glassine in accordance with the practice that must be used for each one. The exhaust ducts control the amount of steam present in the chamber to the extent of preventing condensation of the steam on the sheet and the precise construction of the headers and the steam valve enable satisfactory results to be achieved when the humidifier is used with the multicolor press.

Where it is desired to humidify paper or cardboard objects such as cups, caps, lids, etc. which are not per se in the form of a running web or which have been fabricated from a web of sheet material, I utilize the structure shown in Figures 6–10. A humidifying chamber **60** contains an upper spray assembly **61** having horizontal headers **62** and **63** connected by a series of upwardly arched runners **64, 64**. A heating coil **65** is positioned in the chamber above the assembly **61** and a similar heating coil **66** is supported in the bottom of the chamber **60** underneath the lower spray assembly **67**. The lower assembly **67** comprises headers **68** and **69** which are similarly connected by upwardly arched runners **70, 70**. Runners **64** in the upper assembly **61** are supplied with spaced jets or nozzles **71** having an internal extension **72** which extends well up into the bore of the runners (Figure 10). This construction assures that no water can be blown from the nozzles **71** since condensate in any of the runners **64** or **70** is automatically carried down to the headers **62, 63** and **68, 69**, thence out through steam traps **72, 73** and pipes **74, 74**. Since the nozzles **75, 75** on the lower runners **70** are located on the upper portions of the runners, there is no necessity to extend these nozzles into the runners. Headers **62, 63, 68** and **69** are all connected to steam exhaust lines **74, 74** through suitable steam traps, two of which are shown at **72** and **73** in Figure 6. Steam is introduced to the moistening assembly through intake conduits **76** and **77**. The chamber **60** is provided with slots **80** and **82** at either end through which a conveyor **83** runs. This conveyor may be of wire screen, mesh or any suitable textile fabric depending upon the conditions that will be encountered. The conveyor is mounted on rollers **84, 84**, one of which may be driven in any suitable manner and at the speed required for the treatment of the particular article. The conveyor **83** is supported by a roller **85** just before entering slot **80** in the exhaust chamber **86**.

The construction of the exhaust chamber **86** is shown more clearly in Figure 8 in which air is drawn through openings **87** and **88** in the plates **89** which are secured at the front to the end of the chamber **60** and to a bulkhead **90** anchored transversely in the chamber and having a slot **91** to accommodate the conveyor. Moisture laden air is drawn through apertures **87** and **88** and thence is exhausted through pipe **92** under control of an exhaust fan not shown. It will be noted that the plates **89** together with the bulkhead **90** and chamber end form an enclosed compartment which surrounds the conveyor inside of the main exhaust chamber **86**.

Where it is desired to impart relatively high moisture content to the articles being processed, I provide an auxiliary spray assembly **95** through which steam, air, or water or any mixture thereof may be directed against articles on the conveyor **83** before entering the chamber. The nozzles **96** may be of standard construction and are connected as shown in Figure 9 to water supply lines **97, 97** and air supply lines **98, 98**. The location and number of the nozzles can be arranged to provide whatever spray

pattern may be required. For certain materials, the temperature of the spray is important; and to control the temperature of the spray discharged from nozzles **96**, a hot water line **99** and a cold water line **100** are connected to T **101**. Any desired mixing of the hot and cold water can be accomplished by proper regulation of the individual valves **102** and **103** in the lines **99** and **100** respectively. If necessary a secondary steam line may be connected to the nozzles **96** either with or without water to provide further range of moisture directed to articles on the conveyor.

In the event that a fabric or canvas material is used for conveyor **83**, it may be possible to dispense with the lower set of nozzles since the fabric of the conveyor itself will carry an adequate amount of moisture to treat the bottom of the articles placed thereon. A thermometer **104** permits the operator to adjust valves **102** and **103** to the desired volume. A diaphragm regulated valve **105** is installed in water line **97** so that the volume of water flowing in this line is controlled by the pressure in the line indicated at **107**. The main air supply line **108** passes through a valve **109** having a suitable reducer **110** and pressure gauge **111** and thence through lines **98, 98** to the opposite sides of each of the spray nozzles. With the apparatus of Figures 6–10, moisture content can be readily controlled and increased in the range of 10 to 30%.

One or more of the various humidifiers and control systems described above have been found to be very satisfactory in the treatment of various papers and paper products either in the form of a running web or in cut shapes supported on the conveyor. For cellophane and glassine, a moisture content in the range of 6–7% is considered to be generally satisfactory. This amount of moisture can be initially added or re-added after having been removed by some previous processing such as the printing press described herein. Other paper products such as sulfite paper and kraft paper may require moisture in the range of 5–20%. The use of an accessory spray in advance of the exhaust chamber reconditions the material before it enters the main chamber so that excess moisture can be readily removed between the initial and final moisture applications.

Having thus described my invention, I claim:

1. A humidifier for imparting moisture to hydrophilic materials including a chamber, means to pass the hydrophilic materials through said chamber, steam supply means for subjecting the materials to a steam atmosphere while in said chamber, control means adjustable into operative and inoperative positions for regulating the movement of the materials into and through said chamber, and means operatively connected with said steam supply means and control means for rendering said steam supply means inoperative simultaneously with said control means and for effecting a delayed operation of said steam supply means after said control means is made operative.

2. An apparatus as defined in claim 1 wherein said means to pass the hydrophilic materials through said chamber includes a porous endless belt having at least one section passing through said chamber along a horizontal plane.

3. An apparatus as defined in claim 1 wherein said chamber includes a slot in opposite end walls thereof forming chamber entrance and exit openings, an exhaust duct at the entrance opening of said chamber, and at least one heating coil disposed within said chamber and having at least one convolution surrounding said exhaust duct, and wherein said steam supply means includes steam coils adjacent said heating coil and a plurality of jets mounted on said steam coil and directed toward the path of travel of the hydrophilic materials.

4. An apparatus as defined in claim 3 further including baffle means interposed between said plurality of steam jets and the path of travel of the hydrophilic mate-

rials to prevent direct impingement of steam against the hydrophilic materials.

5. An apparatus as defined in claim 1 further including means for spraying moisture onto the hydrophilic materials as they move into said chamber.

6. An apparatus as defined in claim 1 wherein said last-mentioned means includes a pneumatically controlled valve.

7. A humidifier for controlling the moisture content of a running sheet material comprising a housing having a slot in the end walls thereof forming inlet and outlet openings through which the sheet passes, at least one suction intake duct adjacent to the inlet opening to said housing, at least one heating coil disposed within said housing and extending between opposite end walls thereof with at least one convolution of said heating coil surrounding said suction intake duct, at least one steam coil disposed within said housing between said heating coil and the path of travel of the running sheet material, nozzles on said steam coil for discharging steam in a direction toward the path of travel of said running sheet material, and baffles interposed between said nozzles and the path of travel of said running sheet material to diffuse and prevent direct impingement of the steam against the running sheet material.

8. A humidifier for imparting moisture to hydrophilic materials comprising a chamber, means to pass the hydrophilic materials through the chamber, means to subject the materials to saturated steam in said chamber, a valve for introducing steam into the chamber, a motor for controlling the movement of the materials to the chamber, a manually controlled switch for jogging the motor, and delay means operatively associated between said motor switch and said valve whereby the motor may

be momentarily jogged without substantially opening said valve.

9. In a multicolor printing press, the combination which comprises means for printing various colored designs on a running sheet, means receiving the printed sheet from said press for drying the same to a reduced moisture content, means positioned adjacent to the outlet of said drying means for rehumidifying said sheet to replace the moisture removed by the drying means, a rehumidifier valve for introducing steam to the rehumidifying means, a motor for operating the printing and drying means of the press, a manually controlled switch for jogging said motor, and delay means operatively associated between the motor switch and the rehumidifier valve whereby the motor may be momentarily jogged without substantially opening said valve.

10. Apparatus in accordance with claim 9 in which the delaying means comprises a pneumatically controlled steam valve.

11. Apparatus in accordance with claim 10 having a supply of compressed air, a pressure regulator in said supply, an air supply line between the regulator and the pneumatic valve, and an electro-pneumatic relay in said last-named supply line.

References Cited in the file of this patent

UNITED STATES PATENTS

2,100,522	Russell et al.	Nov. 30, 1937
2,298,803	Morris	Oct. 13, 1942
2,464,119	Dawson	Mar. 8, 1949
2,590,849	Dungler	Apr. 1, 1952
2,718,065	Conti	Sept. 20, 1955
2,746,278	Artzt	May 22, 1956