July 28, 1959 E. L. FITZGERALD 2,896,623

BREAST PAD AND METHOD OF MANUFACTURE

Filed Oct. 12, 1955

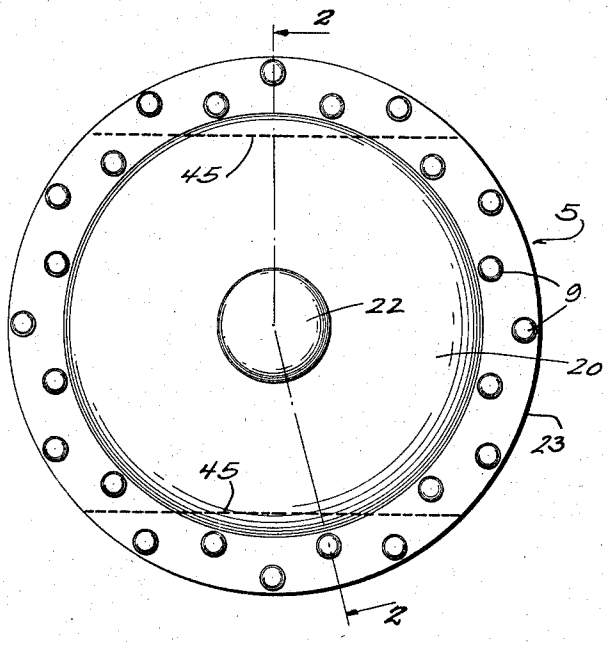

Fig. 1

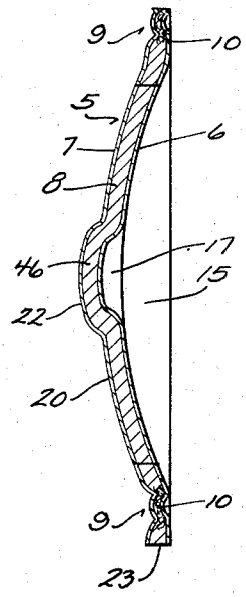

Fig. 2

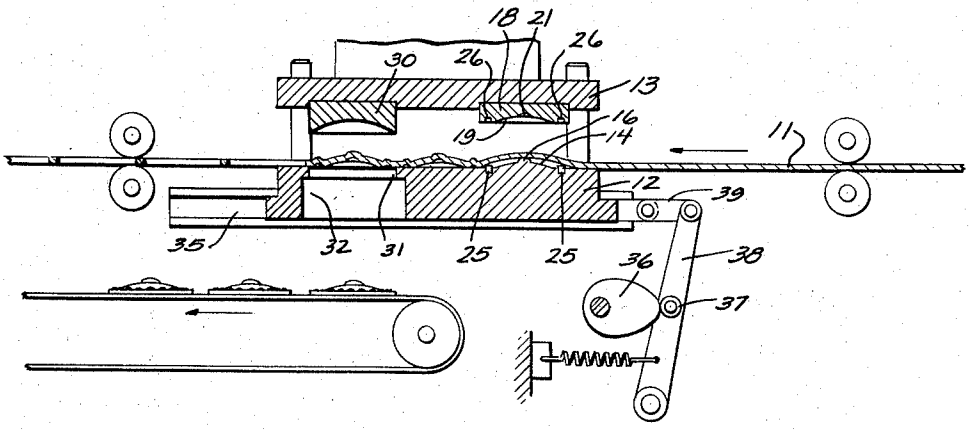

Fig. 3

BY

Wheeler, Wheeler & Wheeler

ATTORNEYS

United States Patent Office

2,896,623

Patented July 28, 1959

1

2,896,623

BREAST PAD AND METHOD OF MANUFACTURE

Edward L. Fitzgerald, Green Bay, Wis., assignor to Diana Manufacturing Company, Green Bay, Wis., a corporation of Wisconsin

Application October 12, 1955, Serial No. 540,029

3 Claims. (Cl. 128—280)

This invention relates to a breast pad and method of manufacture.

Pulp or tissue wadding is laminated in a layer of uniform thickness between external plies of tissue. The resulting web is advanced through a pair of dies one of which forms successive portions of the web to the shape of the desired pad, while, at the same time, uniting the plies with the pulp by pressure deformation to effect fibrous interlock. A subsequent die, which may be mounted on the same carrier punches out the formed pad. The successive pads thus blanked from the web are received on a conveyor. Either before or after the die operation, the plies are desirably stitched along lines which will be on minor chords for further assuring the permanent connection of the parts.

Aside from the fibrous interlock of the plies at spaced points about the periphery of the pad, a feature of the product is the offset central portion which receives the nipple of the patient's breast but is of uniform thickness without such compression as would change its absorptive capacity relative to the rest of the pad. The stitching is also a feature, this having been found desirable to resist sterilizing treatment which might free some of the plies if the fiber interlock were solely relied upon to maintain connection between plies.

In the drawings:

Fig. 1 is a plan view of a pad embodying the invention.

Fig. 2 is a view taken in cross section on the line 2—2 of Fig. 1.

Fig. 3 is a diagrammatic view illustrating a portion of the manufacturing process, the dies used being shown partially in side elevation and partially in section.

The pad shown at **5** comprises inner and outer tissue plies **6** and **7** with an intervening layer of filling material at **8** which is of substantially uniform density and thickness throughout except in the areas **9** spaced around the perimeter of the pad where fibrous interlock has occurred. The tendrils indicated at **10** in Fig. 2 diagrammatically illustrate fibers displaced by the punches used in the mating dies which shape the pad. These fibers of the tissue become interengaged with fibers of the filling material layer **8** in such a way as to tend to maintain the several plies in connection.

In the preferred manufacture of the pad, a web **11** which comprises the tissue and filler plies as above described is fed through a die set which includes a lower platen **12** and an upper platen **13**. The lower platen has a convex portion **14** complementary to the concave interior **15** shown in the finished pad of Fig. 2. The portion **16** of the platen is complementary to the outwardly deformed nipple-receiving pocket **17** of the pad.

The female die **18** has complementary surfaces **19** corresponding to the outwardly convex annular portion **20** of the finished pad. It also has a recess at **21** complementary to the offset and outwardly convex central area **22** at the outside of the nipple-receiving pocket.

The complementary surfaces of the upper and lower dies are uniformly spaced at all points within the annular rim portion **23** of the pad which is approximately planiform except at the points where the fiber lock is effected.

2

To effect fiber lock, the lower platen **12** is provided with pegs at **25** for which the die **18** is provided with sockets at **26**. The interaction of the pegs with the web as the pegs push the web into the sockets **26** produces the outwardly convex bosses **9** and interlocks the fibers **10** as above described.

The platen **13** carries a blanking punch **30** cooperating with a blanking die **31** formed in platen **12** from which an opening **32** extends downwardly through the platen. In each reciprocation of the platen **13** respecting the platen **12**, a new area of the web is formed as above described and a previously formed area is punched from the web and discharged through the port **32** onto the delivery conveyor **34**.

In order that movement of web **11** may be continuous, the entire die set may be reciprocated unitarily along ways **35**. The die set is actuated by cam **36**, cam follower **37**, lever **38** and link **39** to move at the speed of the web during punch operation and retraction.

The lines of stitching shown at **45** are desirably (although not necessarily) applied to the web before the web is passed through the dies. This is done on an ordinary sewing machine or a pair of sewing machines. The lines of stitching extend transversely of the finished pad. They may be close to the outer perimeter of the convex area **20** in which case much of the stitching is confined to the flat rim **23**. This zone about the perimeter of the pad is annular in the circular pad shown.

For many purposes, the stitching is unnecessary, since the fiber interlock achieved in the protuberances **9** fastens the plies quite securely. However, if the pads are sterilized in a hospital autoclave, the resulting softening of the fibers may tend to release the interlock. Hence, when the pads are expected to be thus sterilized, the stitching is desirably used and the specific location shown has been found peculiarly satisfactory in that it accomplishes the purpose without any impairment of the softness of the pad portions which are under pressure engagement with the breast of the wearer.

If the lines of stitching are parallel this facilitates the use of automatic sewing equipment and permits two or more sewing machine heads to function concurrently. It will be observed that the lines of stitching are not required to transverse any of the protuberances **9** despite their proximity to the flat rim at **23**.

The fact that the filler is not compressed at **46** across the nipple-receiving pocket **17** is a substantial advantage both in maintaining full absorptiveness of the filler and in minimizing pressure on the nipple. Compression at this point would result in objectionable hardness and a decrease in absorptive capacity. The method of manufacture as herein disclosed leaves all plies in uniform thickness and density and at uniform spacing except in the areas of fiber interlock and protuberances **9**, these being confined to the outer rim.

I claim:

1. A breast pad comprising an outwardly convex multi-ply disk having adjacent its center a further outwardly convex portion providing a nipple-receiving pocket, the outwardly convex and pocket-forming portions of said disk being of substantially uniform thickness and density and comprising material of substantially like absorptive capacity, the disk being provided with an outer rim having at intervals embossed protuberances in which fibers of the several plies are interlocked.

2. A breast pad comprising inner and outer plies of tissue and an intervening filler ply, the several plies having concentric outwardly convex annular portions and central outwardly displaced pocket-forming portions,

the filler ply being of substantially uniform thickness and density throughout said annular and pocket-forming portions, said plies having means largely outside of such portions for mutually connecting them in a perimetrical zone wherein each of said plies is provided with protuberances in which fibers of the several plies are interlocked, the protuberances being spaced about said zone.

3. The device of claim 2 in which the means connecting the plies further include parallel lines of stitching uniting the plies near their outer edges.

References Cited in the file of this patent

UNITED STATES PATENTS

1,771,983	Wandel	July 29, 1930
1,904,268	Bronson	Apr. 18, 1933
2,047,522	Schnaittacher	July 14, 1936
2,106,246	Fourness	Jan. 25, 1938
2,156,512	Pitcher	May 2, 1939
2,190,807	Steinberger	Feb. 20, 1940
2,258,209	De Jorio	Oct. 7, 1941
2,285,967	Hardy	June 9, 1942
2,304,989	Snowdon	Dec. 15, 1942
2,630,119	Aagesen	Mar. 3, 1953

FOREIGN PATENTS

524,766	Great Britain	Aug. 14, 1940