July 21, 1959 F. W. HUMPHNER 2,895,865

FILAMENT REINFORCED GUMMED TEAR-TAPE

Filed Aug. 26, 1955

Fig.1

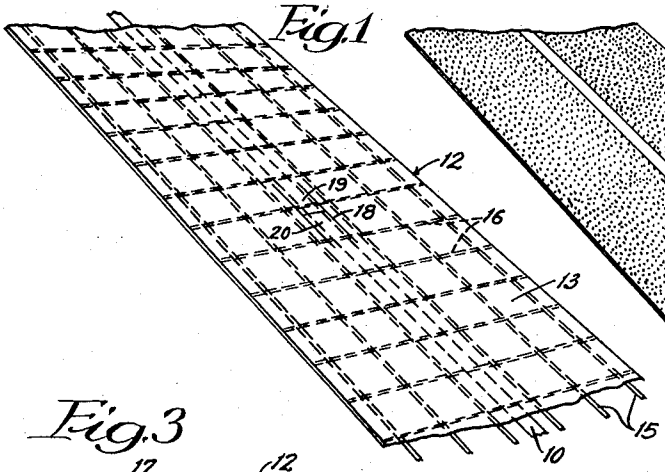

Fig.2

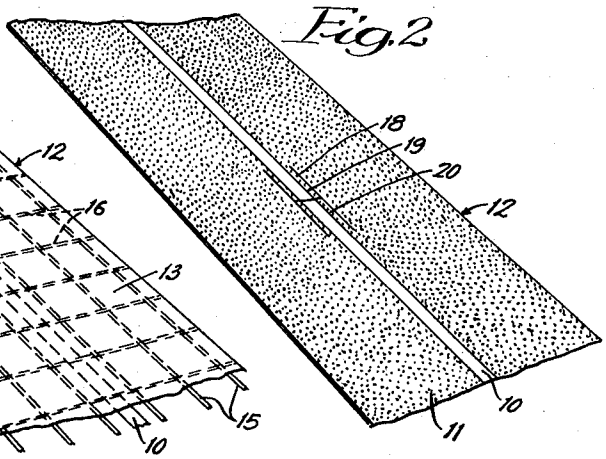

Fig.3

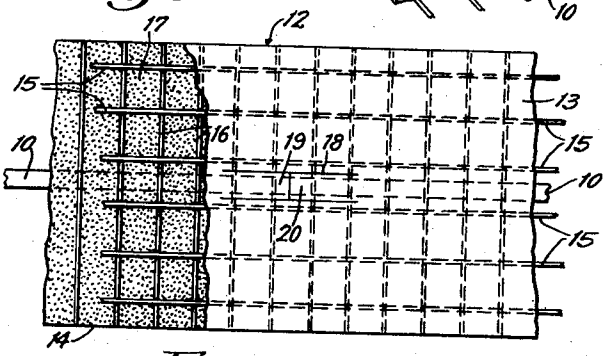

Fig.7

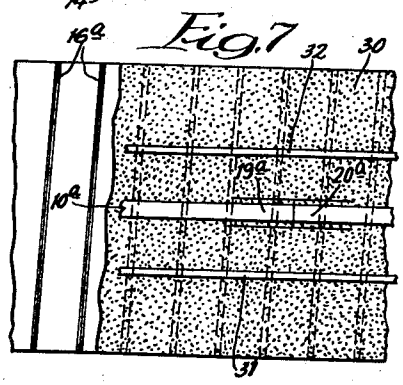

Fig.4

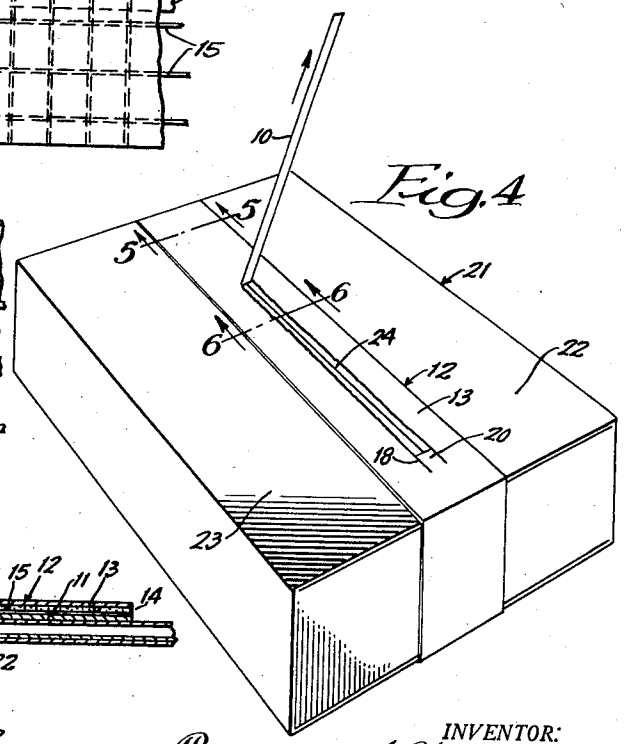

Fig.5

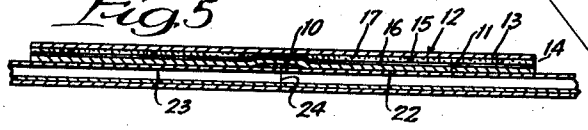

Fig.6

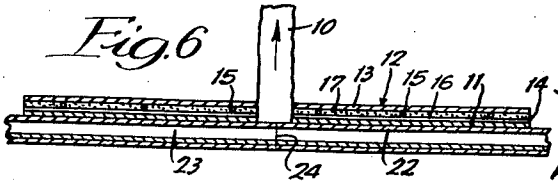

INVENTOR:
Ferdinand W. Humphner,
BY
Dawson, Tilton & Graham,
ATTORNEYS.

United States Patent Office

2,895,865

Patented July 21, 1959

1

2,895,865

FILAMENT REINFORCED GUMMED TEAR-TAPE

Ferdinand W. Humphner, River Forest, Ill., assignor, by mesne assignments, to Minnesota Mining and Manufacturing Company, St. Paul, Minn., a corporation of Delaware

Application August 26, 1955, Serial No. 530,788

7 Claims. (Cl. 154—53.5)

This invention relates to filament reinforced gummed tear-tape, and is particularly useful in connection with reinforced tape which may be employed for sealing cartons, and the like, the tape having filaments extending longitudinally or transversely thereof.

In the use of tear-cords employed with adhesive tape, it is found that the paper of the tape tends to tear in diagonal or lateral directions which greatly increase the effort required for the tearing operation while at the same time producing an unsightly carton appearance. If the tape could be caused to tear along a uniform narrow path, the effort required for drawing the tear-cord would be greatly reduced while a neatly opened box would result.

While reinforced tape in which transverse reinforcing fibers are employed is highly desirable by reason of its strength for the sealing of the flaps of cartons, etc., the use of such tape with a tear-cord has been considered not feasible because when the tear-cord of a piece of such tape is held and drawn, the transverse filaments bunch and present such an obstruction to the tear-tape that the entire tape disintegrates. For this reason, no reinforced tape equipped with a tear-cord has been produced, although the need for the article has long been felt.

An object of the present invention is to provide reinforced tear-tape in which effective severance of the tape and the transverse filaments thereof is readily effected with a minimum of effort while at the same time a narrow slitting of the tape is accomplished in the drawing of the cord. A further object is to provide a reinforced tape equipped with a longitudinally-extending tear filament which may be readily drawn for effecting a severance of the tape along a narrow confined path. A still further object is to provide in reinforced tape having transverse filaments and longitudinal filaments a tear-cord which is effective for slitting the tape and separately severing the reinforcing filaments in a single operation to bring about the severing of the tape and the opening of the carton. Other specific objects and advantages will appear as the specification proceeds.

The invention is shown, in an illustrative embodiment, by the accompanying drawing, in which—

Figure 1 is a broken perspective view of reinforced gummed tear-tape embodying my invention; Fig. 2, a perspective view similar to Fig. 1 but showing a gummed side of the tape; Fig. 3, a top plan view of the tape, a portion of the upper sheet of the tape being broken away to show the filaments; Fig. 4, a perspective view of the tape applied to a carton and sealing the top flaps of the carton; Fig. 5, an enlarged detail sectional view, the section being taken as indicated at line 5—5 of Fig. 4; Fig. 6, an enlarged broken sectional view, the section being taken as indicated at line 6—6 of Fig. 4; and Fig. 7, a plan view of a modified form of the invention in which longitudinal reinforcing filaments extend on either side of the draw-cord, being applied to the outer surface of the adhesive.

2

In the illustration given, **10** designates a tear-cord or filament which may be formed of any suitable material. I have found that lineally-aligned threads of cotton, hemp, or linen bonded together with glue form a very effective tear-tape filament in that the filament is thin and flat and the flat ribbon-like band does not cut into the fingers when it is being drawn and the strength of the filament is very great. It will be understood, however, that any strong cord or filament may be employed for this purpose.

The tear-filament **10** is longitudinally attached to the lower gummed surface **11** of the reinforced gummed tape **12**. The filament **10** may be attached to the gummed surface by moistening the filament and applying it to the gummed surface **11**, or the filament may be separately equipped with adhesive and applied to the surface **10**.

The reinforced tape **12** may be formed in any suitable manner. I prefer to employ two paper sheets or laminations, including an upper sheet **13** and a lower sheet **14** and between the sheets I place longitudinally-extending filaments **15** and transverse filaments **16**. The sheets **13** and **14** are held together by adhesive **17**, and by this means a composite reinforced tape **12** is produced which has unusual strength and which is very effective in closing cartons and sealing the flaps thereof, etc.

The draw-filament **10** may be exposed at the ends of the tape or at intermediate points so that the filament may be drawn to tear through the tape. I prefer to provide the tape **12** with an H-shaped slit **18**, the slit also extending through the tear-filament **10** so as thus to provide tear-tongues **19** and **20** which may be drawn in either or both directions to bring about the severance of the tape. The H-shaped slits are preferably formed at suitable intervals along the tape so that they may be readily found by the person who desires to open the carton, etc.

In Fig. 4, the tape **12** is shown applied to a carton **21**, the top flaps **22** and **23** thereof being sealed by the tape **12**. The top flaps **22** and **23** are shown in greater detail in Fig. 5 and are shown sealed together by the tear-filament-equipped tape **12**. As shown best in Fig. 5, the tear-filament **10** is located in a spaced relation between two longitudinally-extending filaments **15**, with the result that when the tear-filament is drawn, as indicated best in Figs. 4 and 6, the longitudinal threads **15** tend to confine the tear of the paper between the filaments and with the result that a clean longitudinal severance is brought about.

Operation

In the operation of the structure, the composite reinforced tear-cord-equipped tape is moistened on the gummed side **11** and the tape applied to a carton in the usual manner either for uniting the top flaps **22** and **23** or for otherwise closing the carton. Prior to dispensing, the tape **12** is preferably provided with the H-shaped slits so as to provide the oppositely-extending pull-tabs **19** and **20**. When the carton reaches its destination, the tape **12** is firmly anchored to the carton and to the flaps **22** and **23**. The user draws first one tab **19** and then the other tab **20** to bring about the severance of the tape over the median line **24** separating the two flaps **22** and **23**. After the severing of the tape **12**, as indicated, it is found that the flaps **22** and **23** may be then opened readily by giving a quick pull at the ends of the flaps and the open carton presents a neat appearance with the inner edges of the flap free of the tape. The carton may then be reused, if desired, by applying the tear-tape thereto in the manner already described. In the pulling of the tape filament **10**, it is found that a rather narrow band of paper is torn away by the filament and along a longitudinal line between the central longitudinal filaments

15, as indicated best in Fig. 4, and the narrow band thus torn is found to be more effective also in the tearing of the transverse filaments **16**.

The reinforcing filaments, which may be formed of nylon, rayon, cotton threads, sisal, jute or glass fibers, or a variety of other well-known reinforcing fibers or filaments, may be arranged in any desired manner longitudinally or transversely of the tape **12**, or both longitudinally and transversely. They may be diamond-shaped or crisscross or arranged in any other desired angular manner. I prefer the right-angled arrangement illustrated best in Fig. 3 because of the effectiveness of the tear-filament **10** in severing the transverse filaments, while the longitudinal filaments serve to confine the tear against lateral deviation, etc.

Since, in testing tear-cord with reinforced tape, with the tape held in the fingers as the tear-cord is drawn, entirely unsatisfactory results were obtained due to the bunching of the transverse threads bringing about finally a distintegration of the tape, it was a surprise to find that when such tape was prepared with spaced transverse filaments, and the entire tape firmly anchored to a carton so that the transverse filaments were thus held tautly in position between the laminated paper sheets reinforced with the longitudinal filaments, and, in fact, forming short lengths between the longitudinal filaments, a very ready severance of the tape without bunching or disintegration was effected upon the drawing of the cord. Apparently, the adhesion of the tape to the carton utilized the stiffness of the carton as a means for anchoring the tape **12** itself to form a rigid body, while at the same time the transverse filaments were locked in spaced-apart position so that they engaged, one by one, the severing cord **10**, with the result that the cord **10** tore readily through the paper and each successive transverse filament **16** without difficulty. In this operation, the longitudinal filaments **15** apparently further aided the severing by maintaining the transverse filaments **16** against lateral movement, as might otherwise result through the yielding of the paper, etc. In other words, a reinforced filament tear-tape which is inoperative per se by reason of the bunching of the fibers became highly operative and effective when the tape was rigidly anchored to a carton or other rigid body and in which the tear-cord met and broke successively individual transverse threaded or fibers in the tearing operation.

In the modification shown in Fig. 7, the structure is similar to that shown in Fig. 3 except that there are applied to the outer surface of the gummed body **30** two filaments **31** and **32** disposed on either side of the draw-cord **10***a*. The filaments **31** and **32** are preferably in the form of narrow ribbons formed of a number of threads lying side by side and bonded together by adhesive into the ribbon form shown. The longitudinally-extending filaments **31** and **32** further confine the tearing of the tape within the central path provided between the filaments **31** and **32**, while at the same time these filaments, in uniting the transverse filaments **16**, cause the shortened filaments **16***a* to tear more readily when engaged successively by the draw-cord **10***a*.

While, in the foregoing specification, I have set forth a specific structure in considerable detail for the purpose of illustrating an embodiment of the invention, it will be understood that such details of structure may be varied widely by those skilled in the art without departing from the spirit of my invention.

I claim:

1. A reinforced tear-tape, comprising longitudinally-extending threads secured between tape webs and anchored therein by adhesive, adhesive on the underside of said tape, and a tear-cord bonded to the underside of the tape and extending between a pair of longitudinally-extending filaments.

2. Reinforced tear-tape, comprising laminated sheet-like strips having therebetween spaced transverse threads and bonding means between the strips for anchoring the threads therebetween and holding said strips together, adhesive on the lower side of said tape, and a tear-cord bonded to the lower side of said tape and extending longitudinally thereof, said transverse threads having a breaking strength less than that of said tear-cord.

3. Reinforced tear-tape, comprising laminated paper sheets having extending therebetween longitudinal threads and transverse threads, bonding means uniting the paper sheets and anchoring the threads therein, adhesive on the lower side of said tape, and a tear-cord united to the bottom of said tape and extending longitudinally thereof between a pair of said longitudinally-extending threads, said transverse threads having a breaking strength less than that of said tear-cord.

4. Reinforced tear-tape, comprising laminated paper sheets having extending therebetween longitudinal threads and transverse threads, bonding means uniting the paper sheets and anchoring the threads therein, adhesive on the lower side of said tape, and a tear-cord united to the bottom of said tape and extending longitudinally thereof between a pair of said longitudinally-extending threads, said tape being slitted to provide a pull-tab anchored to said tear-cord, said tear-cord having a breaking strength greater than that of said transverse threads.

5. Reinforced tear-tape, comprising elongated paper web strips having disposed therebetween spaced longitudinal threads and transverse threads extending across the tape, adhesive bonding the webs together and anchoring said transverse filaments to said longitudinal filaments and to said paper webs, adhesive on one side of said tape, and a tear-cord extending longitudinally of the tape and united to the adhesive side thereof, said tear-cord having a breaking strength greater than that of said transverse threads and said longitudinal threads serving to guide the rupturing action of said tear-tape.

6. Reinforced tear-tape, comprising elongated paper web strips having disposed therebetween transverse threads extending across the tape, adhesive bonding the webs together, a layer of adhesive on one side of said tape, longitudinal filaments bonded to said second-mentioned adhesive layer and extending longitudinally of said tape in spaced relation, and a tear-cord extending longitudinally of the tape and lying between said longitudinal filaments, said tear-cord having a breaking strength greater than said transverse threads.

7. The structure of claim 6, in which the tear-cord and the longitudinal filaments are all secured to the adhesive on the underside of the tape.

References Cited in the file of this patent

UNITED STATES PATENTS

1,032,026	Roden	July 9, 1912
1,180,541	Roden	Apr. 25, 1916
1,446,094	Jackson	Feb. 20, 1923
1,827,636	Ames	Oct. 13, 1931
1,894,219	Gibbs	Jan. 10, 1933
2,089,405	Newkirk	Aug. 10, 1937
2,561,781	Bruce	July 24, 1951
2,719,804	Carlson	Oct. 4, 1955
2,771,385	Humphner	Nov. 20, 1956

FOREIGN PATENTS

689,686	Great Britain	Apr. 1, 1953