May 12, 1959 P. S. VAN BAARN 2,886,219

CONTAINERS AND CLOSURES THEREFOR

Filed Aug. 9, 1955 3 Sheets-Sheet 1

Fig. 1.

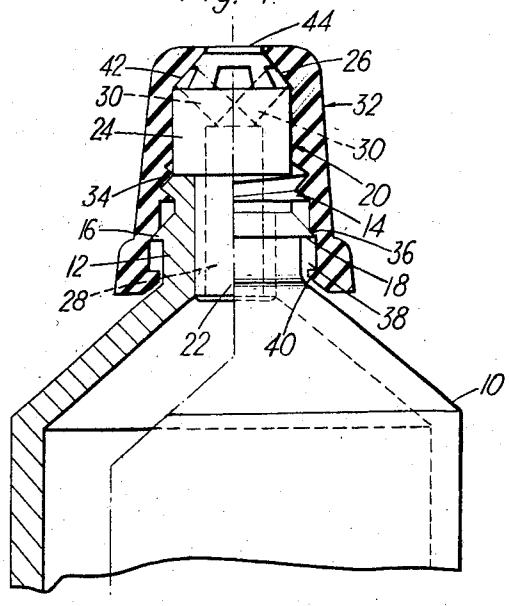

Fig. 2.

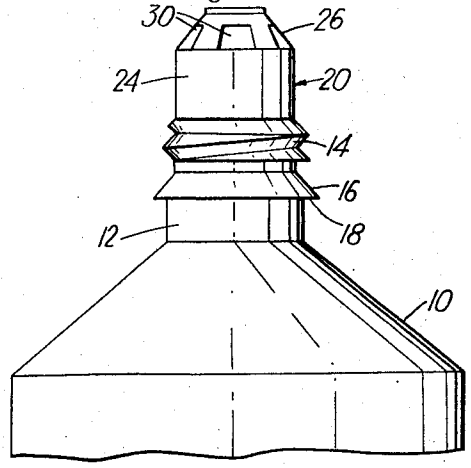

Inventor
Paul S. Van Baarn
By
Dowell & Dowell
Attorneys

CONTAINERS AND CLOSURES THEREFOR

Filed Aug. 9, 1955 3 Sheets-Sheet 2

Fig. 3.

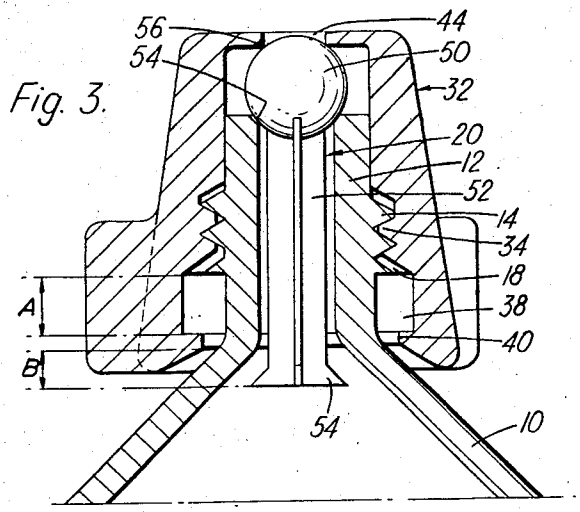

Fig. 4.

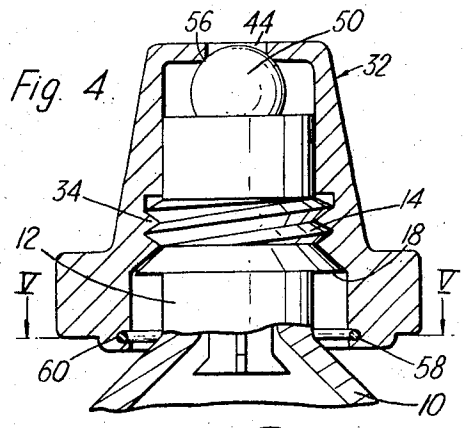

Fig. 5.

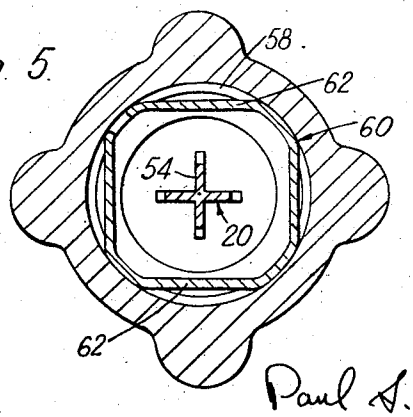

Inventor
Paul S. Van Baarn
By
Dowell & Dowell
Attorneys

CONTAINERS AND CLOSURES THEREFOR

Filed Aug. 9, 1955 3 Sheets-Sheet 3

Fig. 6.

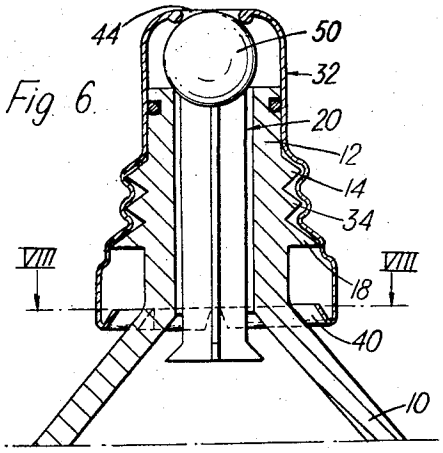

Fig. 7

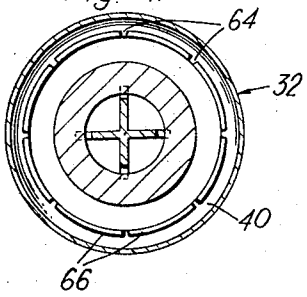

Fig. 8.

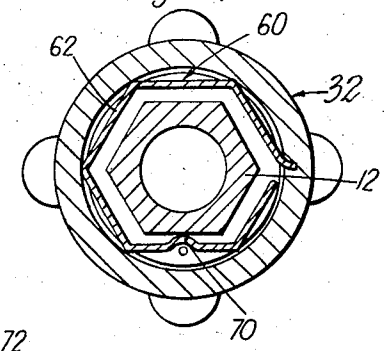

Fig. 9.

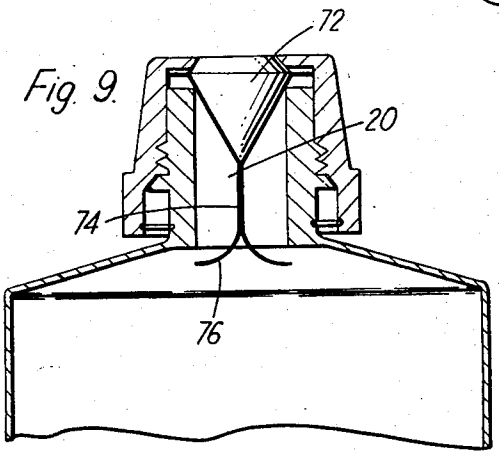

Fig. 10.

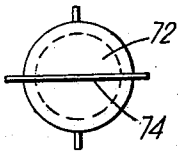

Inventor
Paul S. Van Baarn
By
Dowell & Dowell
Attorneys

United States Patent Office

2,886,219

Patented May 12, 1959

1

2,886,219

CONTAINERS AND CLOSURES THEREFOR

Paul S. Van Baarn, Paris, France

Application August 9, 1955, Serial No. 527,383

Claims priority, application France August 9, 1954

10 Claims. (Cl. 222—521)

This invention relates to necked containers and, more specifically, to closures therefor.

In accordance with the invention, a necked container is provided with a closing cap which can be screwed down on the neck into a sealing position and can be screwed back into a dispensing position in which the screwthread on the cap is clear of the screwthread on the neck and the cap is held captive on the neck by the abutment of a part projecting inwards at or near its lower end against a part of the neck.

It is important that the screwthreads be disengaged before the abutting parts meet because otherwise, continued turning of the cap could cause the cap to be damaged. If, on the other hand, the cap is freely rotatable, only a direct and ineffective pull can be exerted on it in an effort to remove it.

The cap can be made of resilient material or rigid material but the inwardly projecting part should be such that it can yield when the cap is forced down to spring past the part of the neck which is to hold it captive. The said projecting part can be an integral part of the cap or be a part which is fitted to the cap.

Preferably, the container is provided with a plug which lies in the neck of the container and is irremovable therefrom. The plug can be formed and mounted so that the extent to which it can move axially in the neck to allow the contents of the container to be dispensed is limited and is smaller than that of the cap. The plug can also be made to co-operate with the cap so that a completely air tight seal is provided and so that the container is virtually proof against being re-filled.

Various forms of construction in which such caps and plugs are provided are shown in the accompanying drawings which are given by way of example and in which:

Figure 1 shows, partly in section, the neck of a container fitted with a closure in accordance with the invention;

Figure 2 shows the neck of the container of Fig. 1 with the cap removed;

Figures 3 and 4 are sections through the neck of a container having different forms of closures;

Figure 5 is a section taken on the line V—V in Fig. 4;

Figure 6 is a section through the neck of a container having yet another form of closure;

Figure 7 is a section taken on the line VII—VII in Fig. 6;

Figure 8 is a section corresponding to Fig. 5 showing a modified form of closure;

Figure 9 is a section corresponding to Fig. 1 showing a closure with a different form of plug; and

Figure 10 is a plan of a detail of Fig. 9.

Figure 1 shows a container **10**, which may be a collapsible tube, having a neck **12** screwthreaded at **14**. Beyond the lower end of the screwthread, the neck has projecting from it a rib or flange **16** the lower surface **18** of which lies in a plane normal to the axis of the neck.

A plug **20** is engaged in the neck. The lower end **22** of this plug is a tight fit in the bore of the neck and its

2

upper end **24** which is of larger diameter rests on the upper end of the neck. The upper end **24** of the plug is chamfered at **26**. To provide a passage for the contents of the container, the plug is provided with an axial channel **28** which extends from the lower end to near the upper end where four oblique channels **30** extend from it to the chamfer **26**.

The container is provided with a cap **32** having a short internal screwthread **34** which can be engaged with the screwthread **14** on the neck. Below the screwthread **34** the bore of the cap is enlarged and is formed with a chamfer **36** which can be seated on the sloping upper face of the flange **16**. The bore is further enlarged below the chamfer **36** to provide a groove **38** bounded at its lower end by an inwardly projecting flange **40**.

In order to mount the cap on the neck of the container the flange **40** on the cap must be forced over the flange **36** on the neck. In the present instance, this is made possible by the fact that the cap is made of a resilient material.

To close the container, the cap is screwed down on to the neck **2** so that a conical surface **42** at its upper end is brought to bear against the chamfered portion **26** of the plug **20** to obturate the exit orifices of the channel **30**.

When the contents of the container are to be dispensed, the cap is screwed back so as to free the exit orifices, the contents being expelled through a hole **44** in the top of the cap.

It will be noted that when the cap is thus screwed back it remains captive on the neck because of the abutment of the flange **40** on the cap against the flat under surface **18** of the flange **16** on the neck. It will also be noted that when that abutment occurs, the screwthreads on the cap and neck are disengaged so that the cap is free to rotate. Accidental removal of the cap is, therefore, prevented and deliberate removal is made very difficult. Indeed, it is practically if not wholly impossible to remove the cap without destroying it while the risk of damaging the cap accidentally is negligible.

It will also be noted that when the cap is screwed down after some of the contents of the container have been dispensed, any of the contents which may lie in the space between the surfaces **42** of the cap end **26** of the plug will be expelled therefrom. The cap is a close fit on the plug **20** and there is therefore no risk of the screwthreads being clogged by the contents of the container.

In the construction shown in Figure 3, the cap and the neck are screwthreaded as before and the cap has an internally projecting flange **40** which lies beneath a flange **16** on the neck so that it will be held captive when the screwthreads have been disengaged. In this case, however, the cap is a good fit above the screwthread on the neck instead of on the plug and the plug is of a different kind. Here, the plug is movable relatively to the neck of the container and is made of a resilient material, preferably a synthetic resin such as polyvinyl-chloride. It has a spherical head **50** and a cruciform stem **52** which passes with clearance through the bore of the neck. The stem is flared at its lower end **54** so that when the stem has been inserted in the neck (which involves the use of sufficient force to cause the flared portion to yield), the plug is capable of only a limited axial displacement relatively to the neck.

In the closed position shown in Figure 3, liquid tightness is ensured by the bearing of the spherical head **50** on a chamfer **55** at the outer end of the bore of the neck and a chamfer **56** round the opening **44** in the cap. The screwthreads are safeguarded against being fouled by the close fit of the cap on the neck. When the cap is screwed back to the open position, the screwthreads on the cap and neck are disengaged but the cap remains captive because of the abutment of the flange **40** against

the flange **18**. The cap remains in close contact with the neck above the screwthreads. The axial displacement A of the cap is greater than that B of the plug so that the ball **50** can be lifted off the seating **55** without reaching the seating **56**.

The construction shown in Figures 4 and 5 differs from that illustrated in Figure 3 only with regard to the inwardly extending projection in the cap which causes the cap to be held captive. The cap, which can be of a rigid material such as a metal, is provided at its lower end with a groove **58** which receives a polygonal spring **60** parts **62** of which (as shown in Fig. 5) lie in the space within the cap outside the groove **58**. When the cap is screwed back to the open position, the parts **62** abut against the underside of the flange **18** on the neck.

In Fig. 6, the cap **32** is a metal pressing the lower end of which is turned over inwards to form the projection **40** which, by its abutment against the flange **18** keeps the cap captive. The bent-over portion **40** is preferably cut at intervals (as shown at **64** in Fig. 7) to form teeth **66** which will yield when the cap is initially forced down on to the neck. In order to ensure liquid tightness a packing **68** which may be of plastic material is disposed in a groove in the neck.

Fig. 8, which is a section corresponding to that of Fig. 5 shows an arrangement which is suitable for the case in which the contents of a bottle or other container is to be dispensed at a controlled rate. Here the neck of the container below the flange **18** is polygonal (hexagonal as illustrated) or may be knurled. A spring **60** (corresponding to that of Fig. 5) has a kink **70** which bears against the neck and serves to hold the cap in any adjusted position. The teeth **66** of the flange **40** shown in Fig. 7 could be made to serve a similar purpose by bearing against a shaped or knurled portion of the neck.

The construction illustrated in Figures 9 and 10 is more particularly applicable to tubes containing a pasty substance which will dry rapidly. Here, a captive valve member **72** inside the plug **20** and projecting above the neck comprises an upwardly tapering portion which provides a seating for the cap which is formed with a mating aperture in its end wall, and a downwardly tapering portion which extends into the bore of the neck and seals the open end thereof when pressed downward by the cap. This valve member **72** is made of plastic material and has depending from it a thin metal tail **74** having flared ends **76** which will yield to allow the valve member **72** to be inserted in the neck but will resist its removal therefrom. The inclination of flared ends **76** of tail **74** is such that if the plug **72** is sought to be removed, the ends **76** will engage the inner edge of the bottom of the neck but will not be cammed inwardly to the extent which would be necessary to allow withdrawal of the plug from the neck. At the upper end, the valve member has projecting guide pieces which engage the bore of the cap above the neck.

In each of the arrangements described and illustrated, the cap is captive and, because the screwthreads on it and the neck of the container can be disengaged, it is difficult to apply to it, in an attempt to remove it, a force sufficiently great to damage it. The containers cannot be refilled without removing the plug.

The invention can be applied to all necked containers—collapsible tubes, bottles, cans and so on—containing liquid, pasty or powdered materials.

I claim:

1. A closure arrangement, comprising, in combination, a container having a tubular neck formed with a thread; closure means for closing said neck and including a closure member having a tubular portion formed with a thread adapted to mate with said thread of said tubular neck, said closure member being axially movable relative to said tubular neck between a closed position wherein said threads mate with each other and an axially spaced open position wherein said threads are out of engagement and axially displaced past each other so that said closure member is freely rotatable on said neck; and abutment means operatively associated with said container and said closure member for preventing removal of said closure member from said tubular neck, said abutment means being operative only when said closure member is in said open position thereof wherein said threads are out of engagement and axially displaced past each other.

2. A closure arrangement, comprising, in combination, a container having a tubular neck formed with a thread; closure means for closing said neck and including a closure member having a tubular portion formed with a thread adapted to mate with said thread of said tubular neck, said closure member being axially movable relative to said tubular neck between a closed position wherein said threads mate with each other and an axially spaced open position wherein said threads are out of engagement and axially displaced past each other so that said closure member is freely rotatable on said neck; and first and second abutment means on said container and said closure member, respectively, for preventing removal of said closure member from said tubular neck, said first and second abutment means being so constructed and arranged as to engage each other upon axial movement of said closure member from said closed position thereof to said open position thereof after said threads have left engagement with each other.

3. A closure arrangement, comprising, in combination, a container having a tubular neck formed with a thread; closure means for closing said neck and including a closure member having a tubular portion formed with a thread adapted to mate with said thread of said tubular neck, said closure member being axially movable relative to said tubular neck between a closed position wherein said threads mate with each other and an axially spaced open position wherein said threads are out of engagement and axially displaced past each other so that said closure member is freely rotatable on said neck; and first and second abutment means on said container and said closure member, respectively, for preventing removal of said closure member from said tubular neck, said first and second abutment means being so constructed and arranged as to engage each other upon axial movement of said closure member from said closed position thereof to said open position thereof and as to be spaced axially from each other, when said closure member is in said closed position thereof, a distance which is at least as great as the axial distance throughout which said threads are in engagement with each other during axial movement of said closure member from said closed position thereof to said open position thereof.

4. The combination defined in claim 3 wherein said first abutment means are integral with said tubular neck of said container and wherein said second abutment means are integral with said closure member.

5. The combination defined in claim 3 wherein said first abutment means are integral with said tubular neck of said container and wherein said second abutment means include spring means carried by said closure member.

6. The combination defined in claim 3 wherein said closure means further include a closure element movably interposed between the open end of the container neck and said closure member, said closure member being formed with an aperture registering with said open end, said closing element being adapted to close said open end of said tubular neck, said closure member being so constructed and arranged that when it occupies said closed position thereof, it engages said closure element and maintains the same in a position wherein it closes said open end of said tubular neck.

7. The combination defined in claim 6 wherein said closure element has a first portion adapted to engage said open end of said tubular neck and a second portion ex-

tending through said tubular neck, said second portion being so dimensioned as to permit axial movement of said closure element relative to said neck portion.

8. The combination defined in claim 7 wherein said second portion of said closure element is formed with an end portion which, in unstressed condition, has a transverse dimension greater than the greatest transverse dimension of the inside of said tubular neck, said end portion of said second portion being spaced from said first portion a distance greater than the axial length of said tubular neck portion so that said closure element is free to move axially within predetermined limits.

9. A closure arrangement comprising, in combination, a container having a tubular neck formed with a thread; closure means enclosing said neck and including a closure member having a tubular portion formed with a thread adapted to mate with said thread of said tubular neck, said closure member being axially movable relative to said tubular neck between a closed position wherein said threads mate with each other and an axially spaced open position wherein said threads are out of engagement and axially displaced past each other so that said closure member is freely rotatable on said neck; and first and second abutment means on said container and said closure member respectively for preventing removal of said closure member from said tubular neck, said first and second abutment means being so constructed and arranged as to engage each other upon axial movement of said closure member from said closed position thereof to said open position thereof and as to be spaced axially from each other, when said closure member is in said closed position thereof, a distance which is at least as great as the axial distance throughout which said threads are in engagement with each other during axial movement of said closure member from said closed position thereof to said open position thereof; said closure means further including a closure element movably interposed between the open end of the container neck and said closure member, said closure member being formed with an aperture registering with said open end, said closing element being adapted to close said open end of said tubular neck, said closure member being so constructed and arranged that when it occupies said closed position thereof, it engages said closure element and maintains the same in a position wherein it closes said open end of said tubular neck; said closure element having a first

portion adapted to engage said open end of said tubular neck and a second portion extending through said tubular neck, said second portion being so dimensioned as to permit axial movement of said closure element relative to said neck portion; said first portion having a substantially frusto-conical portion tapering toward said second portion and an additional frusto-conical portion tapering in the opposite direction, said first-mentioned substantially frusto-conical portion being adapted to engage said open end of said tubular neck and said additional substantially frusto-conical portion being adapted to be engaged by said closure member.

10. A closure arrangement, comprising, in combination, a container having a tubular neck formed with a first interlocking element; closure means for closing said neck and including a closure member having a tubular portion formed with a second interlocking element adapted to engage said first interlocking element of said tubular neck, said closure member being axially movable relative to said tubular neck between a closed position wherein said interlocking elements are engaged with each other, and an axially spaced open position wherein said interlocking elements are out of engagement and axially displaced past each other so that said closure member is freely rotatable on said neck, and abutment means operatively associated with said container and said closure member for preventing removal of said closure member from said tubular neck, said abutment means being operative only when said closure member is in said open position thereof wherein said interlocking elements are out of engagement and axially displaced past each other.

References Cited in the file of this patent

UNITED STATES PATENTS

1,530,112	Densmore	Mar. 17, 1925
1,716,802	Stevenson	June 11, 1929
1,779,703	Hawkins	Oct. 28, 1930
1,958,429	Hartog	May 15, 1934
2,032,305	Poulin	Feb. 25, 1936
2,309,895	Griffith	Feb. 2, 1943
2,529,964	Raab	Nov. 14, 1950
2,582,026	Friedman	Jan. 8, 1952
2,621,832	Friedman	Dec. 16, 1952

FOREIGN PATENTS

225,754	Great Britain	Dec. 11, 1924