May 12, 1959 W. PALMER ET AL 2,885,798

SHOES, HEELS AND LIFT ATTACHMENTS THEREFOR

Filed Dec. 23, 1957 2 Sheets-Sheet 1

Fig. 1

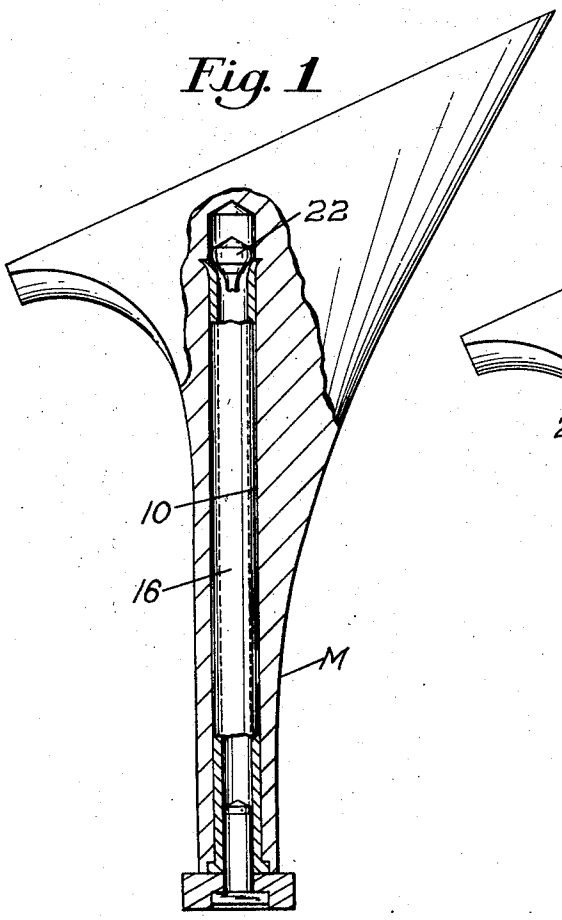

Fig. 2

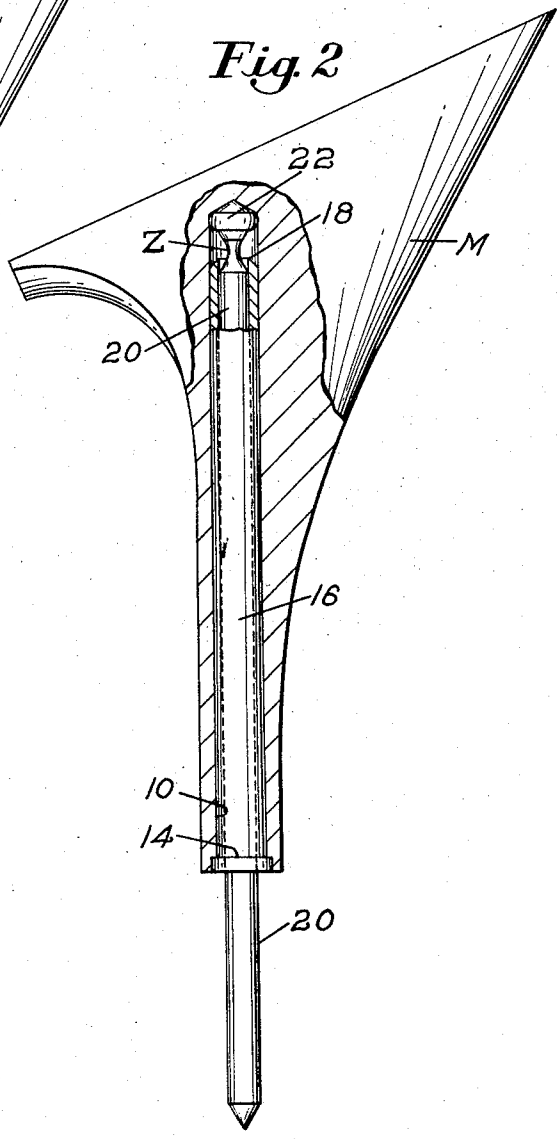

Fig. 1A

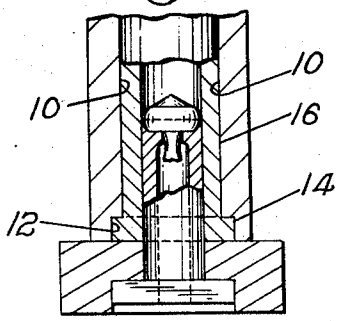

Inventors

Wilson Palmer

Frank P. Hyde

By their Attorney

SHOES, HEELS AND LIFT ATTACHMENTS THEREFOR

Filed Dec. 23, 1957 2 Sheets-Sheet 2

Fig. 3

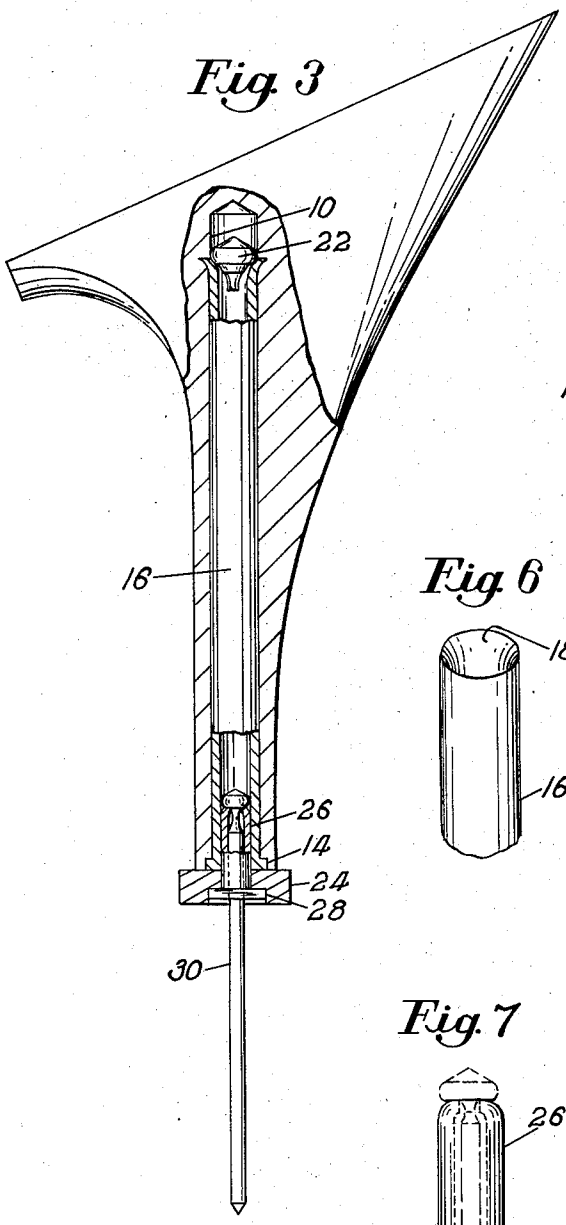

Fig. 4

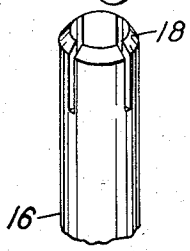

Fig. 5

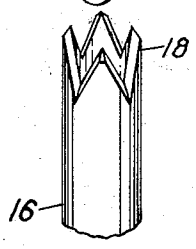

Fig. 6

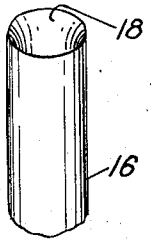

Fig. 7

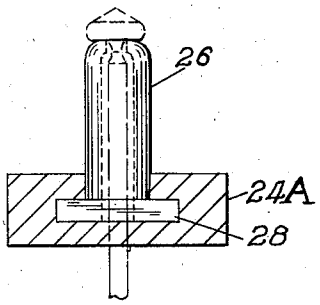

United States Patent Office

2,885,798

Patented May 12, 1959

1

2,885,798

SHOES, HEELS AND LIFT ATTACHMENTS THEREFOR

Wilson Palmer, Marblehead, and Frank P. Hyde, Beverly, Mass., assignors to United Shoe Machinery Corporation, Flemington, N.J., a corporation of New Jersey

Application December 23, 1957, Serial No. 704,706

6 Claims. (Cl. 36—34)

This invention relates to the manufacture and repair of high heels, for women's shoes, of the extremely high and slender variety commonly designated as "spike" heels. In particular, the invention is directed toward a novel means for reinforcing the slender shank portion of a heel, and means for attaching a readily replaceable wear tread or toplift to the end of the heel.

One of the great difficulties in providing a commercially acceptable heel of the "spike" variety is that the shank, especially in the central and lower regions thereof, is so reduced in cross section as to be readily breakable under conditions that may normally be expected to be encountered by a wearer of the shoe.

A further difficulty arises from the fact that, due to the small area at the bottom of such a heel, the wear or destruction of the lift material that provides the heel tread surface is greatly hastened with the result that frequent renewal of the lift is required. This requirement for the repeated replacement of the lift has created a still further problem, namely the splitting or disintegration of the small end of the heel shank due to the repeated insertion and removal of lift attaching fasteners in the form of slugs or nails.

Accordingly, it is one of the objects of this invention to provide a "spike" type of heel that is firmly reinforced throughout the slender heel portions by a tubular mental reinforcement that can be cheaply and readily anchored within a heightwise bore formed centrally through the slender portion of the heel.

Another object is to provide a novel and inexpensive means for the attachment of a readily replaceable lift portion onto the lower end of the heel.

A further object of this invention is to provide novel lift assemblies each of which may be successively and securely attached to a heel end having a very small end area, without causing any splitting or deterioration of the heel end material.

In accord with the foregoing objects, one of the features of this invention resides in the novel embodiment, as a reinforcing member, of a tubular steel rivet barrel which is inserted into and set within the bore of a heightwise hole drilled into a heel body. This reinforcing rivet preferably is of the general type disclosed in United States Letters Patent No. 1,829,696, granted October 27, 1931 to H. N. Wylie et al. Such a rivet is generally designated as a blind rivet and lends itself readily to the purpose of being incorporated into a heel structure because such a rivet may be deeply anchored within the walls of the drilled hole by the rivet-setting action of a headed mandril having a stem portion extending through the rivet barrel and beyond the drilled hole so that the protruding end portion of the mandril stem may be engaged by a rivet-setting tool and tensioned, thereby to upset the remote or blind end of the rivet.

Another feature of the invention is that the rivet (being provided with a flange adapted to bear against the lower end of the heel body) when set, as hereinafter more fully described, produces permanent compression

2

forces within the material of the heel shank surrounding the rivet between its flanged end and its blind or upset end.

Another novel feature of the invention is the provision of another, but smaller, blind rivet that is telescopically set within the tubular bore at the flanged end of the larger reinforcing rivet. This second rivet is also provided with an outwardly disposed flange that is recessed within the material of a toplift member, so that when the second rivet is set and anchored within the reinforcing rivet, the lift member becomes securely attached to the shoe heel assembly. In addition, the setting of the small lift-attaching rivet within the flanged end of the larger rivet produces the further advantageous feature of causing the flanged end of the shank reinforcing rivet to be dilated sufficiently in the region of the setting action so that the barrel of the reinforcing rivet is additionally anchored, by radial wedging engagement, against the walls of the drilled hole adjacent to the tread supporting end of the heel body.

The above and other objects and features of this invention will appear from the following detailed description of the preferred embodiment thereof, illustrated in the accompanying drawings wherein:

Fig. 1 is an enlarged elevation, partially broken away and in cross section, showing a reinforced finished shoe heel and heel lift attached thereto in accordance with this invention;

Fig. 1A is a greatly enlarged fragmentary view showing, in cross section, the detail of the lower end of the heel assembly of Fig. 1;

Fig. 2 is a view, similar to Fig. 1, illustrating the heel member with a reinforcing rivet assembly therein, prior to the setting of the rivet;

Fig. 3 shows the reinforcing rivet of Fig. 2, after setting, and having a lift member and lift-attaching rivet assembled on the heel end preparatory to being set;

Fig. 4 is a fragmentary perspective view showing in detail the blind end of a modified reinforcing rivet before setting;

Fig. 5 is a view similar to Fig. 4 but showing another modified rivet end construction;

Fig. 6 shows a further modification of the blind end of the reinforcing rivet of Fig. 2; and

Fig. 7 is an enlarged view, partly in section, of a modified top lift and attaching rivet assembly.

An embodiment of the invention is illustrated in Fig. 1 wherein a high heel, of the "spike" variety, that may have a main body portion formed from wood, plastic or any other suitable material M is provided with a bore **10** extending longitudinally through the slender heel shank and well into the enlarged upper regions of the heel. The bore **10** at the lower or small end of the heel shank is centrally located and is provided (Fig. 1A) with a larger diameter counterbore **12** adapted to receive, in complementary fashion, the flanged end portion **14** of an elongated reinforcing rivet barrel **16** that is inserted or pressed telescopically into the open bore **10**, as shown in Fig. 2. The opposite end of the rivet barrel, hereinafter referred to as the blind end, terminates in a throat **18** that is suitably relieved so as to be readily deformable at its upper extremity during the rivet setting operation. The reinforcing rivet assembly includes a rivet setting mandril unit having a stem portion **20** extending through and beyond the rivet barrel (Fig. 2), and having an enlarged head **22** integrally connected to the mandril stem by a weakened neck zone Z of substantially reduced cross section that is adapted to become severed when a predetermined tensioning force is applied, as will be described in more detail, upon the mandril thereby to cause the enlarged head **22** of the mandril to deform, by a dilating action, the blind end of the reinforcing rivet barrel.

Having inserted the barrel of the reinforcing rivet assembly to its full extent into the open end bore **10** (Fig. 2), the rivet is then set and firmly attached within the material of the heel by employing any of several well-known makes of blind rivet setting tools, such as the power operated Blind Riveting Tool disclosed in United States Letters Patent No. 2,654,257, granted October 6, 1953 to J. N. Henshaw. In the setting operation, the free end of the mandril stem **20**, which, as above mentioned, protrudes beyond the lower surface of the heel body, is rigidly engaged by the tensioning jaws of the tool. When actuated, these jaws move in a direction to pull the headed end **22** of the mandril forcefully into abutting engagement with the deformable throat **18** of the reinforcing rivet barrel. The resultant wedging force of the enlarged head **22**, as it is drawn downward into the smaller throat opening, causes the blind end of the rivet barrel **10** to be deformed or flared radially outward until the thus-flared portions are forced into penetration with the material M of the heel body. The degree of weakening originally imparted to the mandril at the neck zone Z is calculated to withstand and transmit a sufficient tensioning force, before a severance thereof is effected, to produce a strong mechanical interlock of the blind end of the rivet barrel and the material of which the heel body is formed. Generally speaking, the less setting force that is required to spread the throat **18** and to embed the flared end portions into the heel body, the less tensile strength need be originally provided in the grooved neck Z in order to enable the head **22** to accomplish its purpose of producing a firm anchoring of the reinforcing rivet. The degree of tensile strength that may be required in different instances may, in turn, vary in accordance with the degree of resistance to penetration that is offered by heel body materials of varying degrees of density or hardness. Accordingly, in order to facilitate the spreading of the throat portions **18** and to compensate for varying degrees of resistance to penetration that may be encountered in the use of different heel body materials, a feature of the invention resides in the provision of variously relieved formations of the barrel throat portion **18**. The upper end of the barrel having a continuous circumferential wall, as illustrated in Figs. 1, 2 and 3, may be modified, as shown in Fig. 4 by providing a series of diametrically disposed cuts extending longitudinally of the barrel. It may be perceived readily that such a provision reduces the degree of tensile force that must be sustained by the necked portion of the mandril in order to cause the desired setting-imparting deformation at the blind end of the barrel. A further modification of the blind end of the barrel, that may advantageously be employed to facilitate the entry of the deformed throat portion **18** into the material of the heel body, is illustrated in Fig. 5 wherein serrated teeth are provided. Also, the taper to relieve the thickness of the end wall of the barrel may be provided internally of the barrel as shown in Fig. 6.

Whatever throat formation may be employed to derive the desired anchoring of the reinforcing rivet within the bore **10**, it is to be understood that upon the severance of the head **22** from the stem **20** the latter is then completely withdrawn from the set rivet barrel.

During the above-described rivet setting action, the flanged end **14** of the barrel is being bucked or held stationary by an abutting face of the setting tool. Therefore, as the enlarged head **22** is progressively drawn down against and into the upper end of the barrel, axial compression of a substantial degree is imparted to the intermediate length of the barrel wall **16** tending to foreshorten the same and circumferentially to expand its walls into tighter engagement with the inner wall of the heel bore **10**, thereby to bind the length of the rivet barrel within the heel bore. In addition, the progressive flaring of the upper barrel portion **18** and its concurrent entry into the material M of the heel exerts a downward force upon the material M that is disposed beneath the zone of entry. Since this downward force is being bucked or resisted by the heel end engagement with the rivet flange **14**, substantial compressive forces are imparted longitudinally of the heel throughout the extent of the set barrel. These compressive forces are retained in the material M after the mandril has been broken, and as a result thereof the material in the slender portion of the heel is greatly strengthened.

In addition to providing a strongly reinforced heel shank, such a heel construction as above described affords a further important advantage that resides in the means and manner whereby a top lift tread surface may be readily and securely attached and subsequently replaced upon high heels.

The second aspect of this invention will now be described with reference to Fig. 3. A piece of top lift material **24**, of sufficient area to cover the end of the shoe heel, is preassembled with a second blind rivet assembly that will be referred to as the lift-attaching rivet. This rivet assembly is somewhat similar to that of the previously described reinforcing rivet assembly, except that this assembly has a shorter and narrower rivet barrel **26** adapted to fit telescopically within the lower bore portion of the larger rivet barrel **16**. The lift attaching rivet is likewise provided with a radially enlarged flange **28** that is recessed within the material of the top lift **24** so that the flange will not constitute a portion of the wear tread surface of the lift. The barrel **26** projects through an opening in the lift material so that the blind end of the barrel that is provided with a headed mandril **30** may be first fitted up into the now hollow bore of the reinforcing rivet barrel **16**, in the manner illustrated in Fig. 3, and then set as in Figs. 1 and 1A. This second rivet setting operation is performed in a similar manner to that above described in relation to the setting of the heel reinforcing rivet, and, when sufficient tensioning force has been applied by the outward drawing of the mandrel stem **30** to cause the blind end of the small rivet barrel to be deformed into rigid wedging engagement with the interior of the larger rivet barrel, the mandrel is caused to be severed at its weakened zone just beneath its headed end, and the stem **30** is then completely withdrawn leaving the tread surface of the top lift **24** securely attached to the reinforced heel structure.

A modified form of top lift and attaching rivet assembly is illustrated in Fig. 7 where the entire flange portion of the rivet barrel is embedded within the center of the top lift material **24A**. The latter construction is particularly suitable when the tread material is of a synthetic origin than can be molded from a liquid phase. In this instance the rivet barrel is located and supported by suitable means so that the flange portion **24A** is centrally disposed within the mold cavity, thus, upon the curing or hardening of the molded top lift material, the rivet barrel **26** becomes an integral part of the top lift assembly. In the production of this modified unitary assembly the headed mandril stem may be either located within the rivet barrel before the molding operation, or the mandril may be inserted at a later stage by pushing the pointed end of the mandril stem through the molded material **24A** to punch an opening therethrough, adjacent the free end of the flange **28**. The above described unitary top lift attaching assembly having the flanged end of the rivet interlocked by molding within the body of the top lift or tread material affords many advantages. In addition to eliminating the operations of forming a suitably contoured countersink (Figs. 1 and 3) for the reception of the rivet flange **28**, and the subsequent recessing of the flange within the countersunk opening, it assures that, in the stock handling or storage of the finished top lift assemblies, the rivet mandril, barrel and top lift material do not accidentally become disassembled from each other. The latter occurrence is precluded when the rivet barrel with or without the pres-

ence of the mandril stem is molded into the material **24A**, for in either case the stem is so tightly gripped by the material **24A**, adjacent the free end of the flange, that only deliberate tensioning action, such as in the setting operation, could dislodge the mandril stem from the rest of the top lift assembly.

Having thus described our invention, what we claim as new and desire to secure by Letters Patent of the United States is:

1. A reinforced shoe heel and lift attachment, for high heel shoes, comprising: a heel body portion having an elongated slender shank provided with a cylindrical bore centrally located within the shank and extending heightwise therethrough; a reinforcing blind rivet provided with a flanged end and an elongated barrel fitted snugly within said bore and having the opposite blind end of the barrel set into interlocking penetration with the material of the heel body by the dilative action of the headed end of a rivet setting mandril; and a top lift assembly attached to the shank end of the heel by a second blind rivet, the barrel portion of which, at the flanged end is embedded within the material of the lift, and at the blind end is coaxially disposed and set, by the headed end of a second mandril, in the barrel of said reinforcing rivet.

2. A reinforced shoe heel and lift attachment, for high heel shoes, comprising: a heel body the slender shank portion of which is reinforced by a tubular blind rivet securely set within an accommodating bore formed heightwise through said shank portion; and a top lift assembly attached to the shank end of the heel by a second blind rivet having a flanged end adapted to fit within an accommodating recess in the lift material and having

a barrel portion extending through said material and telescopically fitted into the tubular bore of the first-mentioned rivet; said latter rivet barrel being securely anchored by a setting action within the heel body and said second rivet barrel being securely anchored by a setting action within the tubular bore of the first-mentioned rivet.

3. A reinforced shoe heel and lift attachment, as defined in claim 2, and wherein the blind end of the tubular reinforcing rivet terminates in a barrel wall of reduced thickness, thereby to facilitate its being flared radially outward to penetrate the material of the heel body.

4. A top lift assembly, for attachment to a shoe heel having an opening at the shank end of the heel, comprising: a tubular blind rivet having a barrel portion adapted to fit telescopically within said opening and an enlarged flange at one end of the barrel; a rivet setting mandril having an enlarged head and a stem portion extending through the tubular barrel and outwardly beyond said flanged end of the barrel; and a body of top lift material formed with an internal recess to accommodate the enlarged flanged and the rivet barrel portion adjacent thereto.

5. A top lift assembly as defined in claim 3 wherein said top lift material is a tough wear-resisting thermoplastic composition, and wherein the flanged end of the rivet, and adjacent barrel portion are firmly embedded within the body of the top lift material.

6. A top lift assembly as defined in claim 3, wherein the body of the top lift material encases the flanged end of the tubular rivet while the headed end of the rivet setting mandril is telescopically disposed within the rivet barrel.

No references cited.