Oct. 28, 1958 C. GABRIELSEN ET AL 2,858,042

CONSOLE MERCHANDISING MACHINE

Filed Dec. 31, 1951 6 Sheets-Sheet 1

Fig 1

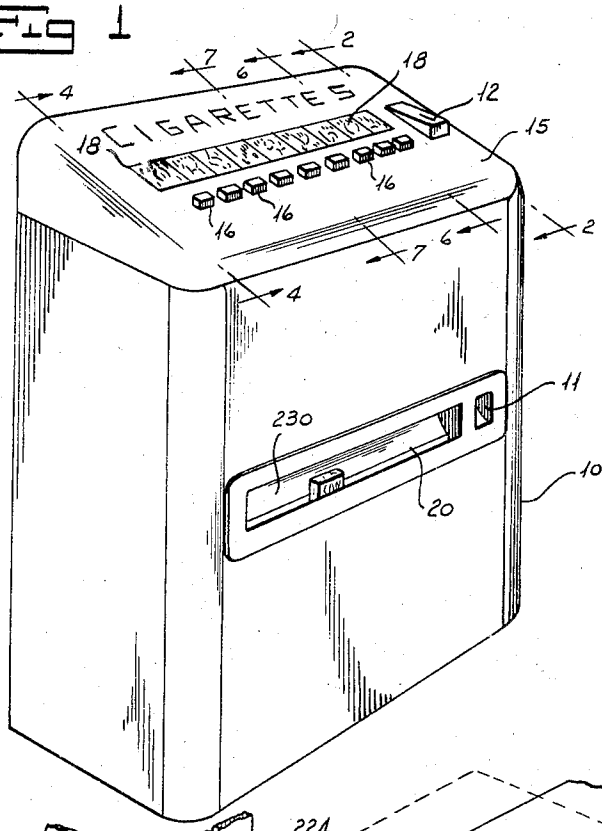

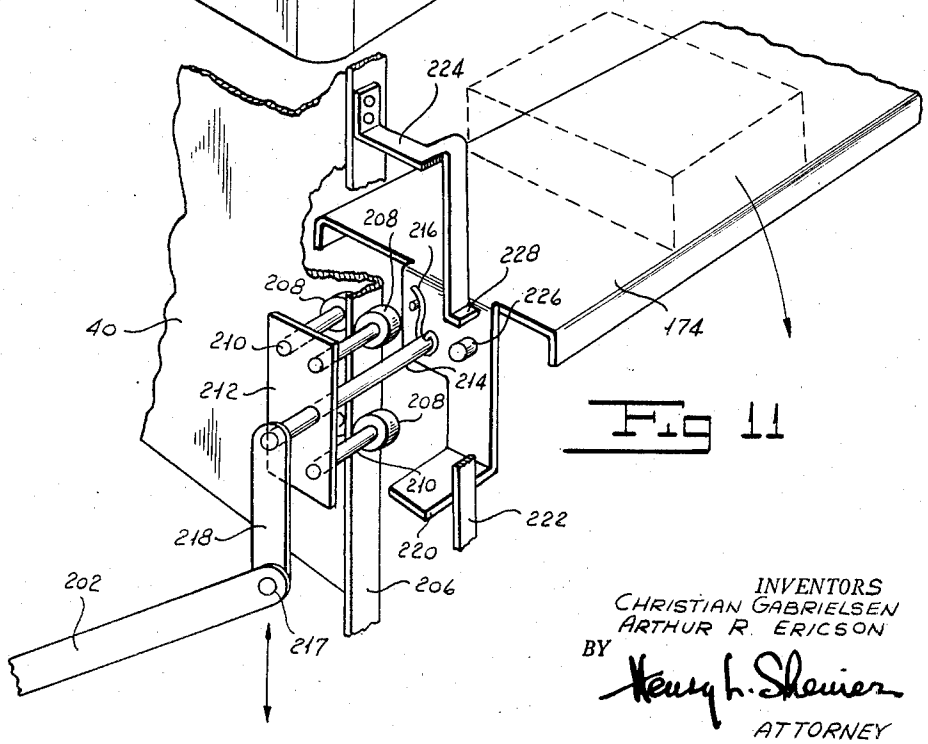

Fig 11

INVENTORS
CHRISTIAN GABRIELSEN
ARTHUR R. ERICSON
BY Henry L. Shemier
ATTORNEY

CONSOLE MERCHANDISING MACHINE

Filed Dec. 31, 1951 6 Sheets-Sheet 2

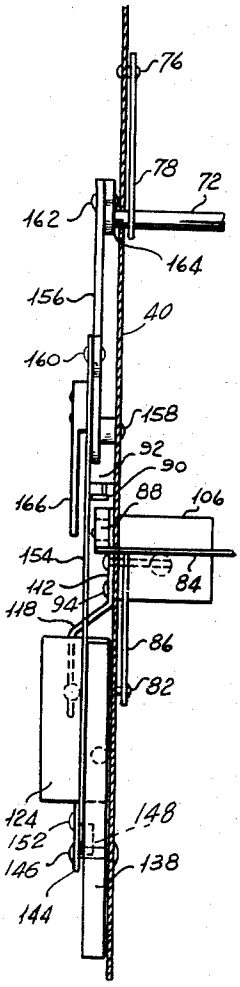

Fig 3

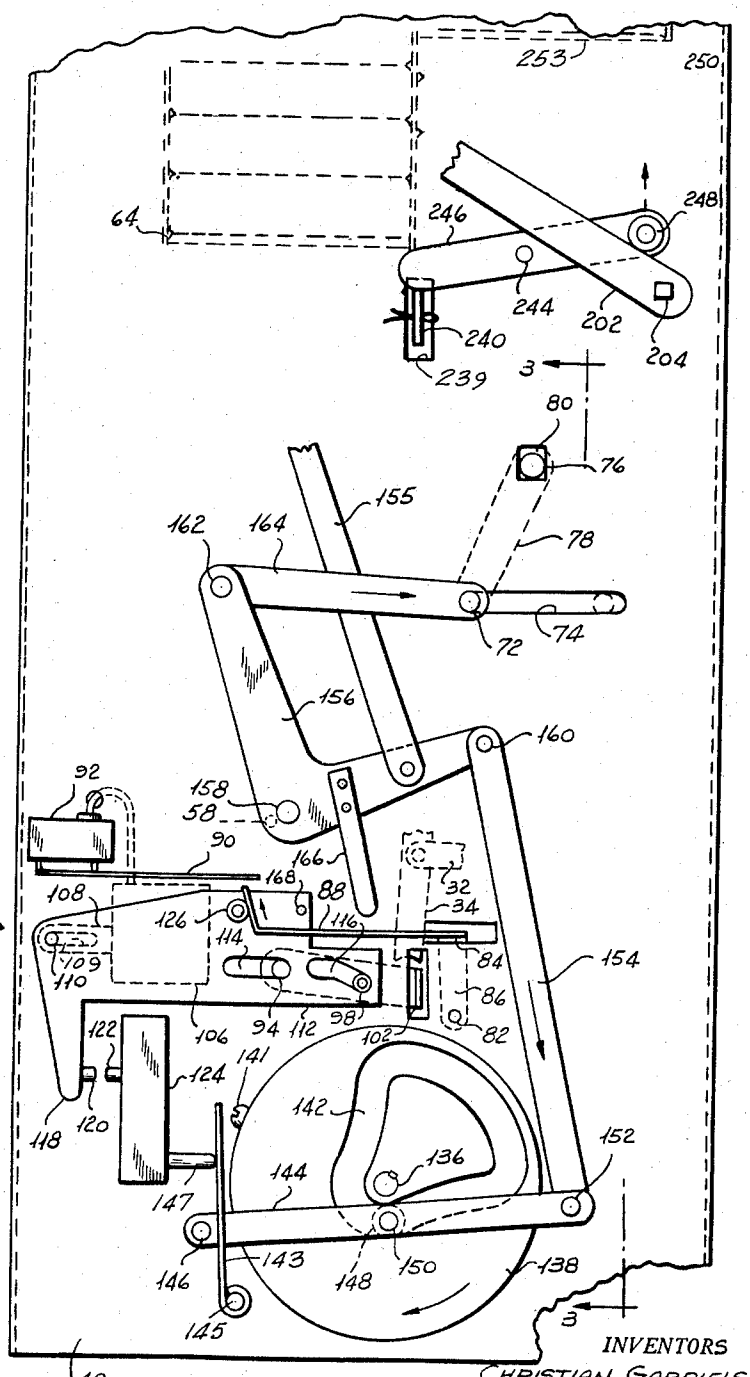

Fig 2

INVENTORS
CHRISTIAN GABRIELSEN
ARTHUR R. ERICSON
BY Henry L. Sherier
ATTORNEY

CONSOLE MERCHANDISING MACHINE

Filed Dec. 31, 1951 6 Sheets-Sheet 3

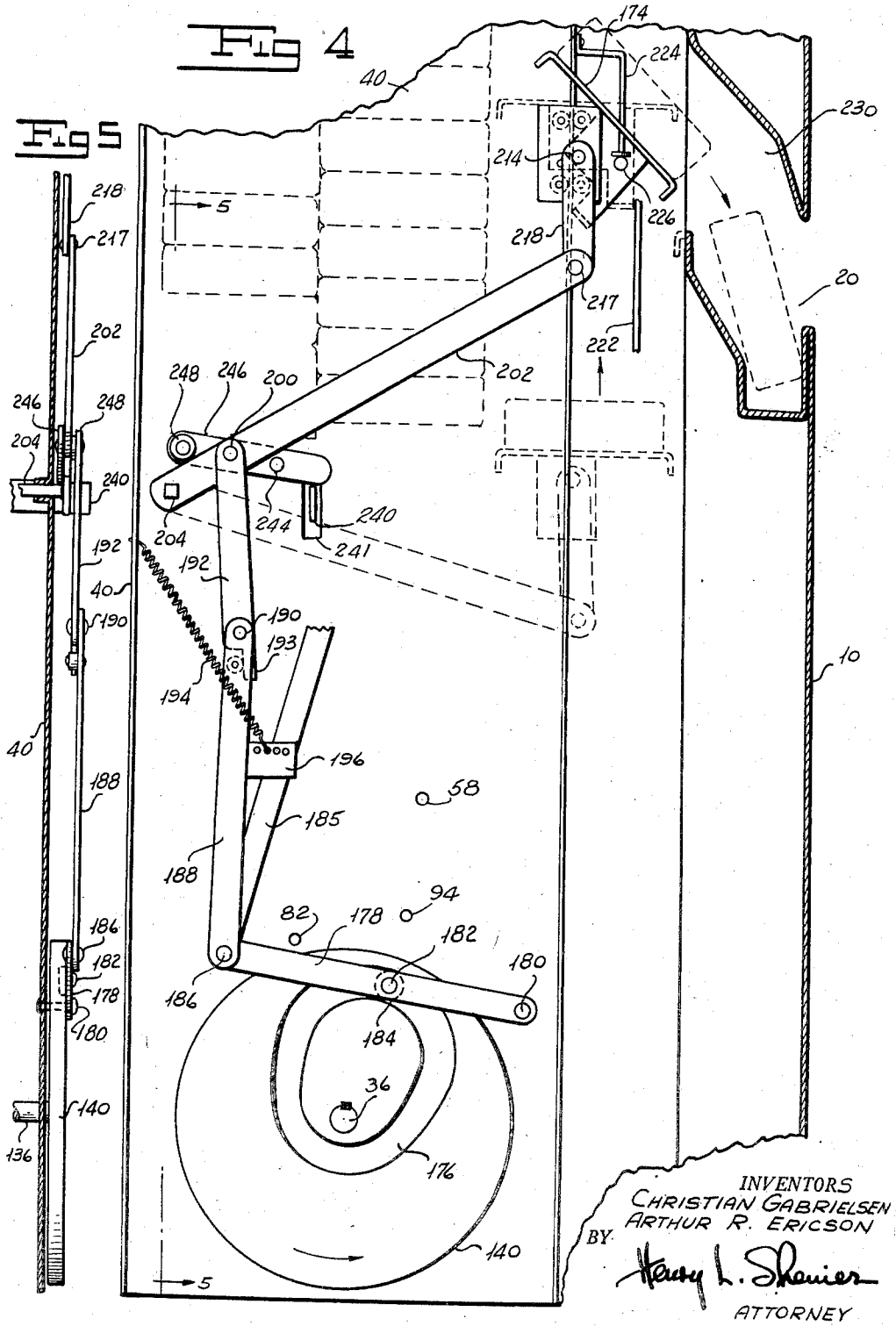

INVENTORS
CHRISTIAN GABRIELSEN
ARTHUR R. ERICSON
BY Harry L. Shenier
ATTORNEY

CONSOLE MERCHANDISING MACHINE

Filed Dec. 31, 1951 6 Sheets-Sheet 4

Fig 6

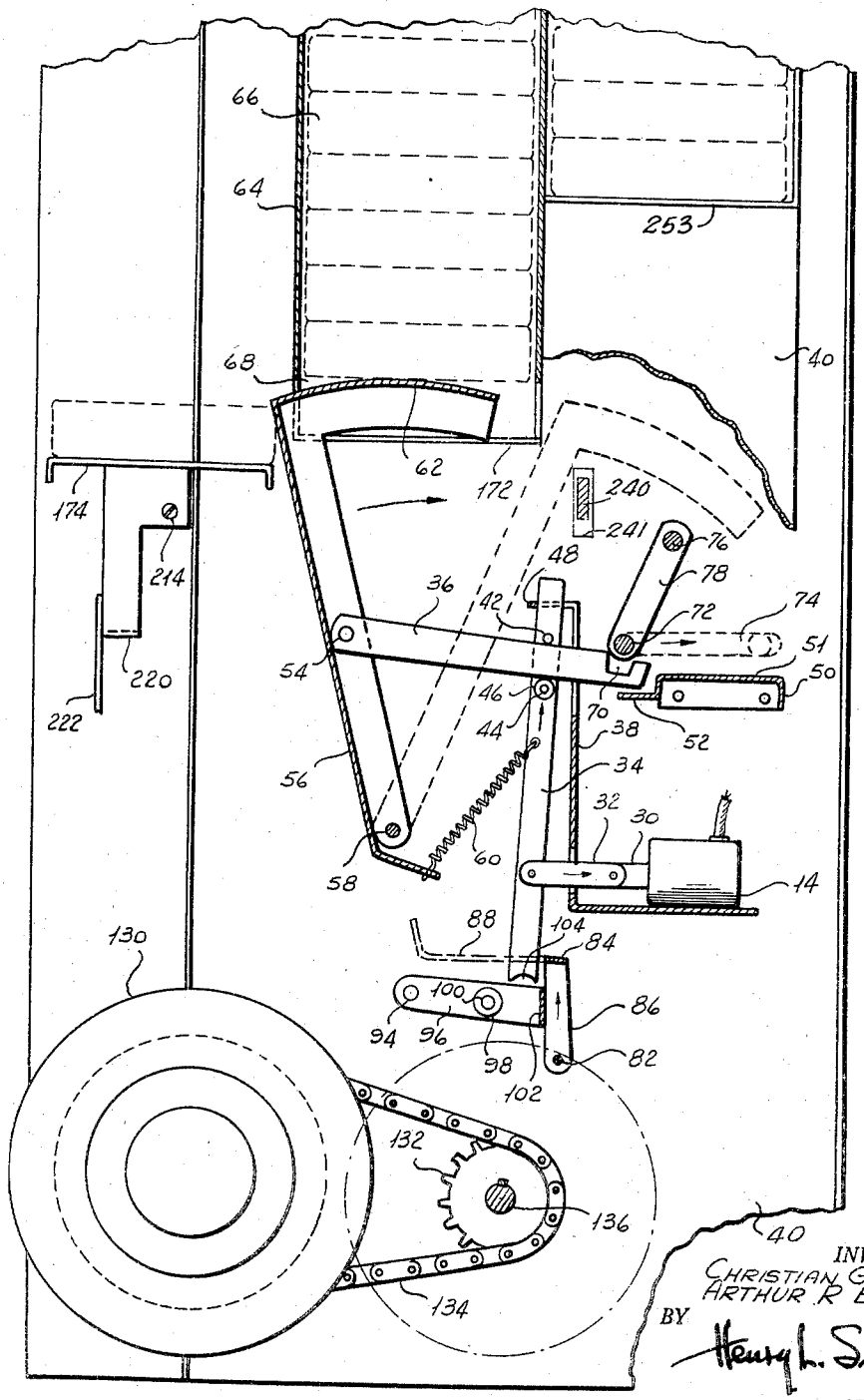

INVENTORS
CHRISTIAN GABRIELSEN
ARTHUR R ERICSON
BY Henry L. Shavier
ATTORNEY

CONSOLE MERCHANDISING MACHINE

Filed Dec. 31, 1951 6 Sheets-Sheet 5

FIG 7

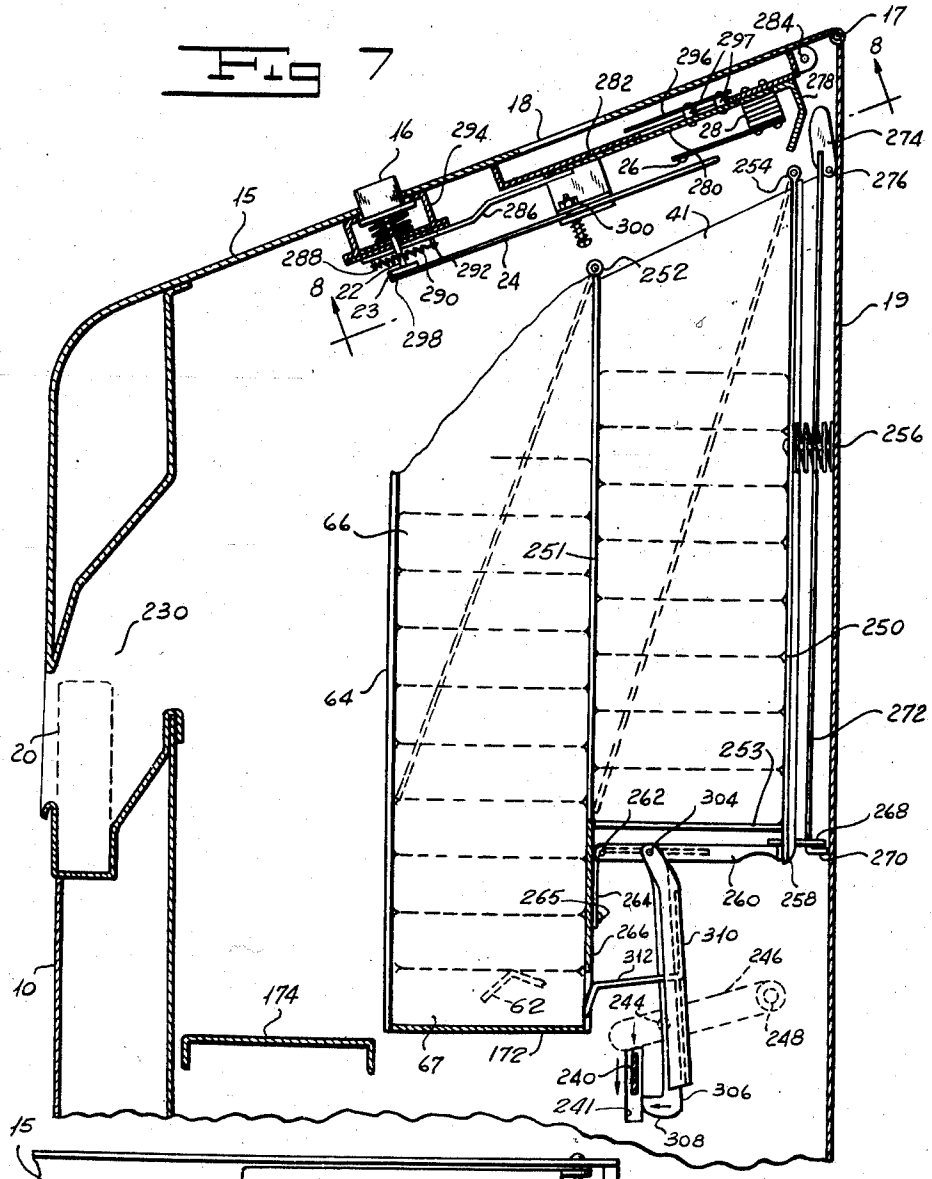

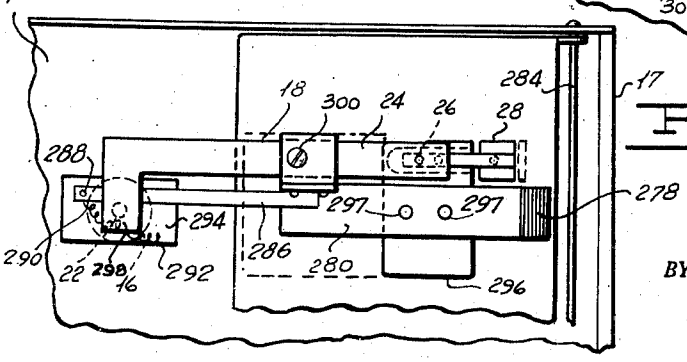

FIG 8

INVENTORS
CHRISTIAN GABRIELSEN
ARTHUR R. ERICSON
BY Henry L. Shenier
ATTORNEY

CONSOLE MERCHANDISING MACHINE

Filed Dec. 31, 1951 6 Sheets-Sheet 6

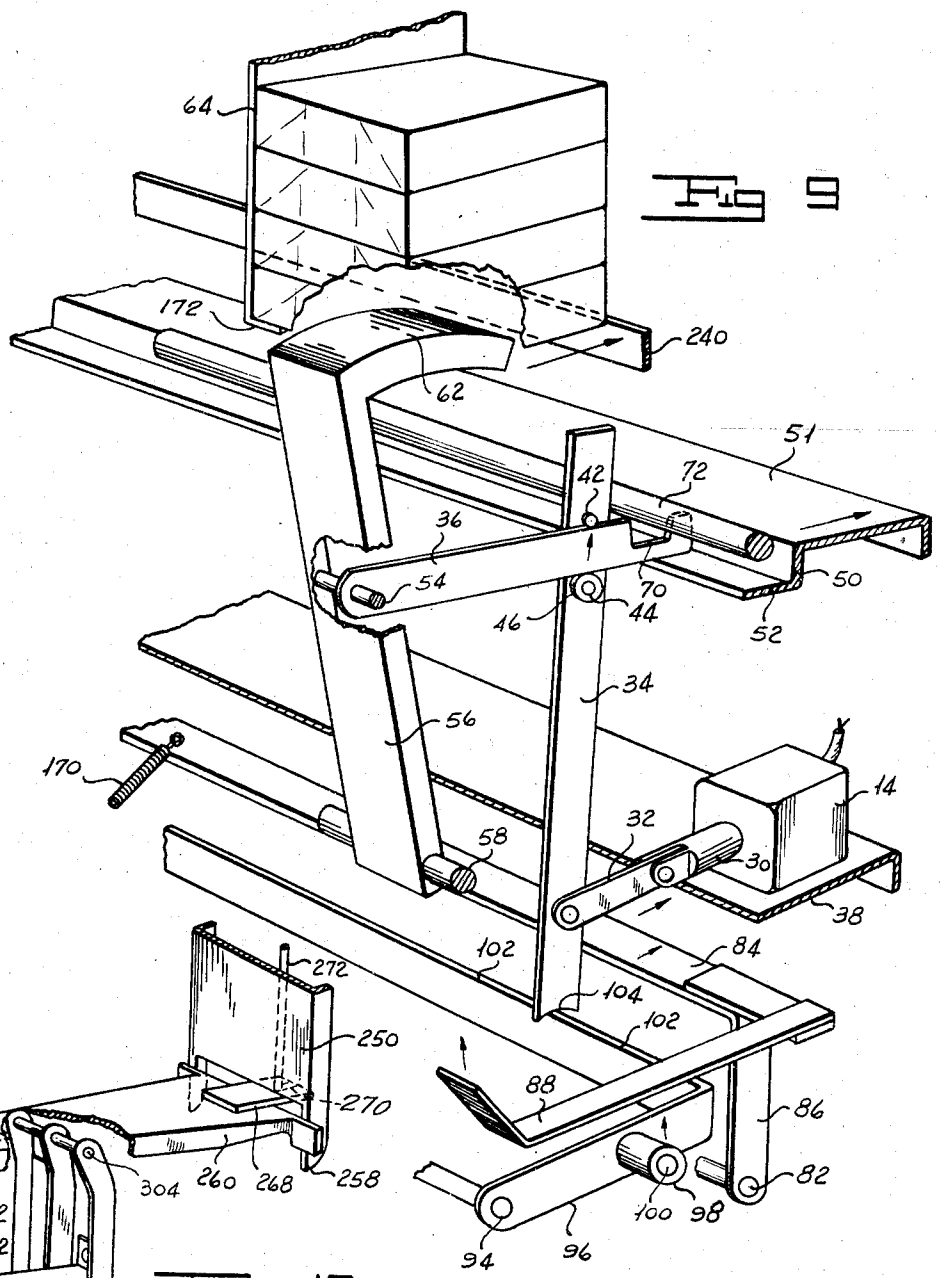

Fig 9

Fig 10

INVENTORS
CHRISTIAN GABRIELSEN
ARTHUR R. ERICSON
BY Henry L. Scherier
ATTORNEY

United States Patent Office

2,858,042

Patented Oct. 28, 1958

1

2,858,042

CONSOLE MERCHANDISING MACHINE

Christian Gabrielsen, Mountain Lakes, and Arthur R. Ericson, Belleville, N. J., assignors to Rowe Manufacturing Co., Inc., Whippany, N. J., a corporation of New York

Application December 31, 1951, Serial No. 264,308

8 Claims. (Cl. 221—6)

Our invention relates to a console merchandising machine and more particularly to an automatic electric-powered merchandising machine for vending cigarettes or the like of a console shape.

Most columnar merchandising machines have containers for cigarettes or the like in which the cigarettes are stacked one on top of the other and the delivery mechanism is adapted to dispense the bottommost package of cigarettes. Fresh merchandise is placed upon the top of a partially empty column. In this manner the oldest pack of cigarettes is sold first. This precludes the possibility of merchandise becoming stale in event a machine is not used frequently over a period of time. The principle of delivering the package of cigarettes from the bottom of the stack, however, has necessitated the placing of the vending machine upon a stand so that a purchaser will not have to stoop or bend to take the package of cigarettes delivered in response to a vending operation. In many locations the tall construction of a cigarette machine is disadvantageous in that it interferes with the view and limits the number of places in which a cigarette machine may be conveniently installed. It is desirable to have a merchandising machine lower in height for many locations and yet retain the delivery principle of vending the bottommost package of a stack.

One object of our invention is to provide a conside merchandising machine which is low in height and in which a package delivered from the bottom of the stack is automatically elevated to a delivery opening raised from the floor a convenient height.

Another object of our invention is to provide a multicolumnar vending machine for cigarettes or the like in which the articles to be delivered are dispensed from the bottom of the stack and automatically elevated by an elevator common to all of the columns during each vending operation.

Another object of our invention is to provide a multicolumnar merchandising machine operated from a single electric motor in which the pressing of a push button couples the power means to the delivery mechanism of the column corresponding to the push button.

A further object of our invention is to provide a multicolumnar vending machine operated by an electric motor in response to push buttons in which the push button is automatically rendered inoperative when a column is depleted of merchandise.

A further object of our invention is to provide a multicolumnar vending machine having a reserve column of merchandise adapted to replenish the first column when depleted of merchandise.

Still another object of our invention is to provide a multicolumnar vending machine in which a visible empty signal is operated when a column becomes depleted of merchandise.

Other and further objects of our invention will appear from the following description.

In the accompanying drawings which form part of

2

the instant specification and which are to be read in conjunction therewith and in which like reference numerals are used to indicate like parts in the various views:

Figure 1 is a perspective view of a console merchandising machine showing one embodiment of our invention.

Figure 2 is a fragmentary side elevation drawn on an enlarged scale viewed along the line 2—2 of Figure 1.

Figure 3 is a sectional view taken along the line 3—3 of Figure 2.

Figure 4 is a fragmentary sectional view drawn on an enlarged scale viewed along the line 4—4 of Figure 1.

Figure 5 is a sectional view taken along the line 5—5 of Figure 4.

Figure 6 is a fragmentary sectional view drawn on an enlarged scale taken along the line 6—6 of Figure 1.

Figure 7 is a fragmentary sectional view drawn on an enlarged scale viewed along the line 7—7 of Figure 1.

Figure 8 is a fragmentary view taken along the line 8—8 of Figure 7.

Figure 9 is a perspective view showing a portion of the delivery mechanism.

Figure 10 is a perspective view showing a portion of the shift column and empty signal operating mechanism.

Figure 11 is a perspective view showing a detail of the merchandise elevator.

In general our invention contemplates the provision of a plurality of primary columns and a plurality of shift columns directly behind the primary columns. Both columns are filled with merchandise stacked one on top of another, as, for example, cigarettes. For purposes of convenience, and not by way of limitation, we will consider the merchandise being vended as cigarettes. Each column of cigarettes is provided with a corresponding push button. When the proper amount of money is in the coin register a circuit is adapted to be completed by a push button to energize a column solenoid. The energization of a column solenoid couples a column ejector corresponding thereto to a common operating bar and simultaneously operates a switch bar. This switch bar is pivoted and carries a switch-operating member adapted to actuate a switch to close a circuit through a second solenoid. The second solenoid, when energized, operates a sliding cam the movement of which closes a second switch which energizes the motor which operates both the operating bar through an operating-bar cam and the elevator through an elevator cam. The sliding cam, furthermore, will rotate an engaging lever which performs a double function. First, it engages the ejector mechanism of a column selected with the operating bar and maintains it engaged until the operating bar starts its motion, and secondly, it prevents all other ejectors from becoming accidentally engaged with the operating bar so as to preclude more than one column from having merchandise dispensed from it. The sliding cam, furthermore, maintains the second solenoid energized by keeping the switch-actuating member engaged until the delivery cycle is well under way. At an appropriate time during the delivery cycle the sliding cam is reset, de-energizing the solenoid and permitting the parts to assume a position for a subsequent operation. At the beginning of the cycle the elevator is positioned adjacent the bottom of the column in a position adapted to receive cigarettes dispensed from a column. The elevator cam is so timed that immediately after the delivery of cigarettes the elevator will be raised to carry the cigarettes upwardly in a position to be dumped into a delivery opening. Means are provided for automatically tilting the elevator to accomplish this dumping. After the cigarettes are delivered the elevator is returned to its original position to be ready for the next cycle. The movement of the elevator cam is

also used to power a match-delivery system, which is a separate invention and hence will not be described in detail in this specification. Associated with the elevator system we provide a reciprocating bar which is adapted to operate both the shift column and the empty signal and the button-disabling device. The arrangement is such that when the merchandise in the main column becomes depleted the reciprocating bar will trip a latch and permit the shift column to move into position. After the last package of cigarettes is sold, the reciprocating bar will power a transmission system to operate an empty signal and to render the push button for that column inoperative.

More particularly referring now to the drawings, our merchandising machine is housed in a suitable cabinet **10** made of sheet metal or the like which is of a height sufficiently low to enable it to be placed in locations not adapted for the taller types of merchandising machines. A coin slot **12** is provided at the top of the machine for the reception of coins and may be associated with any suitable register, as for example that shown in copending application of Christian Gabrielsen et al. for Electrical Coin Register, Serial No. 166,045, filed June 3, 1950, now Patent No. 2,677,450, issued May 4, 1954. The arrangement of the coin register is such that the deposit of proper coins will complete a plurality of circuits in parallel to a respective plurality of solenoids, except for one point of interruption for each solenoid adapted to be completed by respective push-button switches. There is one solenoid for each column. The column solenoids are designated by the reference numeral **14** and can be seen in Figures 6 and 9. A plurality of respective push buttons **16** are associated with respective columns adjacent display windows **18** showing the merchandise carried by each column, in this case various brands of cigarettes. It is to be noted that the push buttons **16** and their associated structure, to be described hereinafter, form selector switch means for the respective containers of the machine. The register mechanism is such that differently priced cigarettes can be carried in different columns. In addition, a change mechanism is associated with the register. Change is delivered through a suitable chute to an opening **11** adjacent which is a cigarette delivery opening **20**. The opening **20**, it will be observed, is above the floor on which the cabinet **10** rests, it being understood that the bottoms of the columns are adjacent the floor at a position too low to be conveniently reached by a purchaser. Each of the push buttons **16** operates a plunger **22** carrying a switch actuating lug **23** which can be seen in Figure 7 to tilt a lever **24** to complete the circuit through contact **26** carried by an insulating block **28**. When the push button **16** is pressed, therefore, the circuit to the individual column solenoid **14** is completed.

Referring now to Figure 6, the energization of a column solenoid **14** will pull its armature **30** to the right. The armature is connected to a link **32** which is attached to a generally vertical link **34**. Each vertical link **34** is mounted on a coupling lever **36** and is centered by a bracket **38** carried by a side support plate of the frame **40** of the machine. The vertical link **34** has an upper pin **42** which rests upon the coupling lever **36**, and a lower pin **44** which carries a roller **46** engaging the lower portion of the coupling lever **36**. The upper end **48** of the bracket **38** prevents the upper end of the vertical lever **34** from moving to the left, as viewed in Figure 6. A baffle **50** is carried by the frame **40** and extends horizontally across the machine. A shelf **52** at the front edge of the baffle normally supports the rear end of the coupling lever **36**. The other end of the coupling lever is pivotally connected by a pin **54** to a column ejector **56**. The column ejector is pivoted around a shaft **58** around which all the other column ejectors are likewise pivoted, it being understood that the shaft extends across

the machine in a horizontal direction. Conveniently we support the ends of shaft **58** in the side panels of frame **40** as shown in Figures 2 and 4. The upper portion of the ejector **56** is provided with an arcuate flange **62** which normally is positioned underneath the column **64** in which packages of cigarettes **66** are supported in stacked relation. There is an opening **68** through which the cigarettes are adapted to be pushed by the ejector, as will be described more fully hereinafter. Normally, cigarettes are securely positioned between the front, back and side walls of the column **64** resting upon the arcuate flange **62**. A spring **60** simultaneously biases the ejector **56** to rotate in a counterclockwise direction, as viewed in Figure 6, and the vertical link **34** to rotate in a counterclockwise direction. The right-hand end of the coupling lever **36** is provided with a notch **70** positioned just below and out of engagement with the operating bar **72**. A slot **74** is provided in each side portion of the frame **40**. The operating bar extends horizontally across the machine and is adapted to be reciprocated from side to side in the slots **74**. In order that both ends of the operating bar will be driven uniformly from the drive mechanism, which will be described hereinafter, we provide a transmission shaft **76** to which we secure a pair of cranks **78**. The shaft **76** extends across the machine and is carried by the side walls of the frame. The drive for the operating bar is at one end thereof. The other end is driven through the cranks **78** and the shaft **76** to which these cranks are keyed. In this manner both ends of the operating bar will be driven. The bearings for the shaft **76** accommodate for a slight upward and downward movement to permit the operating bar to move in the horizontal slots **74**. The provision for this motion is provided by the cut-out portion **80**, which can be seen in Figure 2.

Pivoted about a shaft **82** which extends across the machine horizontally we provide a switch bar **84** which is carried by the shaft **82** through a pair of cranks **86** secured to the shaft **82** for rotation therewith. We support shaft **82** between the side panels of frame **40** as shown in Figures 2 and 4. The switch bar carries a projection **88** secured thereto for motion therewith. This projection is positioned adjacent the righthand side of the machine in proximity to a switch-actuating arm **90** adapted to close a switch contained within housing **92**, as can be seen by reference to Figure 2. The arrangement is such that when the switch bar crank **86** rotates in a clockwise direction the projection **88** will move upwardly and contact the end of the arm **90**. Pivoted about a horizontal shaft **94** extending across the machine we provide an engaging lever **96** which carries a roller **98** pivoted about a pin **100** carried by the lever **96**. We mount shaft **94** in the respective side panels of frame **40** as shown in Figures 2 and 4. A second lever similar to lever **96** is positioned on the other side of the machine and interconnected with the lever **96** by an engaging bar **102**. The bottom portion of the vertical lever **34** is provided with an arcuate notch **104**.

When the vertical lever **34** is rotated in a counterclockwise direction against the action of spring **60** due to the energization of the solenoid **14** the lower portion of the lever **34** will engage the switch bar **84** and move it to the right, as will be apparent from Figure 6, rotating the crank **86** and lifting the end of the projection **88** upwardly to engage the switch arm **90** to close the switch **92**. The closing of this switch will energize a second solenoid **106** the armature **108** of which will move to the right carrying a pin **110** with it. Mounted for reciprocation in a horizontal plane we provide a sliding cam **112**. Pin **110** extends through a slot **109**, shown in Figure 2, in the side plate of frame **40** to connect the armature **108** to a cam **112**. This slot permits pin **110** to move with respect to the frame. The cam is provided with a slot **114** positioned around the shaft **94** and supported thereby. The roller **98** is positioned in a cam

slot **116**. The sliding cam **112**, furthermore, carries a depending projection **118** having an abutment **120** adapted to contact the button **122** of a microswitch **124**. The sliding cam **112** also carries a roller **126** against which the end of projection **88** normally rests. When the projection **88** moves upwardly to close the switch **92** to energize the solenoid **106** the sliding cam **112** will move to the right. In this position the roller **126** will be underneath the projection **88** and will serve to maintain the switch **92** in closed position. At the same time the movement of the cam slot **116** with respect to the roller **98** will rotate the crank **96** in a counterclockwise direction around its shaft **94** and move the engaging bar **102** upwardly. Since at this instant the lower end of the vertical lever **34** has been moved directly over the engaging bar **102** by the solenoid **14**, the upward movement of the engaging bar will lift the lever **34**. At the same time the engaging bar will be positioned behind the lower end of all of the other vertical links to prevent any of these from moving to the right. The upward motion of the vertical link **34** will lift the coupling lever **36**, which is resting upon the roller **46**, so that the notch **70** will embrace the operating bar **72**.

It will be remembered that the motor **130**, shown in Figure 6, has been energized by the motion to the right of the sliding cam **112** due to the engagement of the projection **120** with the button **122** of the microswitch **124**. When the motor is energized it drives a gear **132** through a drive chain **134**. The gear **132** is keyed to a shaft **136** which extends horizontally across the machine and is supported in suitable bearings (not shown). The operating-bar cam **138** is keyed to the shaft **136** and is driven thereby to rotate in a clockwise direction, as viewed in Figure 2. Switch **124** remains closed to keep motor **130** energized until the "off" button **147** of the switch is actuated. We mount a screw **141** on the periphery of cam **138** in a position to engage a leaf spring **143** carried by a pin **145** on an end plate of frame **40** at the end of the revolution of cam **138** in a clockwise direction as viewed in Figure 2. When head **141** actuates spring **143**, the spring operates button **147** to stop motor **130**. The elevator cam **140**, shown in Figure 4, is likewise keyed to the shaft **136** and is driven thereby to rotate in a counterclockwise direction as viewed in Figure 4. The operating-bar cam **138** is provided with a cam groove **142**. A drive lever **144** is pivoted about pin **146**, supported on the side panel of frame **40** as shown in Figures 2 and 3, and carries intermediate its end a follower **148** pivoted about a pin **150** carried by the drive lever **144**. The follower **148** is seated in the cam groove **142**. The right-hand end of the drive lever **144** is pivoted by pin **152** to the lower end of a link **154**. A bell crank **156** is pivoted about a pin **158** carried by a side panel of frame **40** as shown in Figures 2 and 3. The upper end of the link **154** is pivotally connected to one arm of the bell crank by means of a pin **160**. The other arm of the bell crank **156** is pivotally connected by a pin **162** to one end of a link **164** the other end of which is connected to one end of the operating bar **72**. The lower end of the crank **78** is also pivotally connected to the operating bar **72**. As the cam **138** rotates the link **154** will be pulled downwardly rotating the bell crank **156** in a clockwise direction, as viewed in Figure 2, thus moving the operating bar **72** to the right. The bell crank carries a reset arm **166** which is adapted to engage a pin **168** carried by the sliding cam **112**.

Referring now to Figure 6, as the operating bar moves to the right it will carry the coupling lever **36** to the right due to the interengagement of the notch **70** with the operating bar. As soon as this motion starts, the end of the coupling lever **36** will be carried over the upper surface **51** of the baffle **50**. This will prevent the right-hand end of the coupling lever from becoming disengaged from the operating bar when the engaging bar **102** moves downwardly again. This downward motion is produced by the reset arm **166** contacting the pin **168** and moving the sliding cam **112** to the left to the position shown in Figure 2. This permits the switch **92** to open, de-energizing the solenoid **106** and at the same time rotating the crank **96** in a clockwise direction, thus moving the engaging bar downwardly. The solenoid **14** is immediately deenergized when the push button **16** is released. The switch bar was held in its rotated position by the projection **88** resting on top of the roller **126**. As soon as the sliding cam moves to the left the switch bar, which is biased to rotate in a counterclockwise direction by the spring **170** shown in Figure 9, will move to substantially vertical position in readiness for the next cycle.

As the operating bar moves to the right the column ejector **56** will be rotated in a clockwise direction through the coupling lever **36**, thus carrying the arcuate flange **62** to the right to its dotted line position in Figure 6 permitting the stack of cigarettes in a column to fall to the lower flange **172**. When the operating bar returns, moving to the left, the upper portion of the ejector **56** will engage the bottommost pack of cigarettes, moving it from the support **172** to the elevator shelf **174**, which is normally at the bottom of the columns. As the bottommost package of cigarettes is pushed from the column the flange **62** once more presents itself under the stack of cigarettes, supporting the remaining packages in the position shown in Figure 6.

Referring now to Figure 4, the elevator cam **140** is provided with a cam groove **176**. An elevator-operating lever **178** is pivoted about pin **180**, supported on a side panel of frame **40** as shown in Figures 4 and 5, and carries upon pin **182** intermediate its ends a cam follower **184** lodged in the groove **176**. The other end of the elevator-operating lever **178** is pivotally connected by pin **186** to a link **188**. The link **188** is pivoted with a joint intermediate its ends. The joint comprises a pin **190** which joins the lower portion of the link **188** to its upper portion **192**. The upper portion is provided with a flange **193** adapted to engage the edge of the link **188** below the pivot **190**. A spring **194** has one end thereof connected to a lug **196** carried by the lower portion **188** of the transmission link. The other end of the spring **194** is secured to the frame **40**. The spring, it will be observed, biases the link **188** to rotate in a counterclockwise direction as viewed in Figure 4. This bias serves two functions. First, it counterbalances the elevator, as will be pointed out more fully hereinafter, and secondly, it serves to maintain the upper portion **192** of the link in substantial alignment with the lower portion **188** of the link. The flange **193** engages the right-hand side of the lower link **188** and limits the position of the upper portion **192** with respect to the lower portion **188** of the transmission link. The position is slightly beyond dead center. The purpose of this connection is to permit the elevator to be moved manually from its upper position just after delivering cigarettes to its lower position during the loading of the machine. This will be pointed out more fully hereinafter.

It will be seen that due to the spring **194** and the arrangement of parts that the transmission link **188** is effectively a solid link. It is connected by pin **200** to an elevator lever **202**. The lower end of the elevator lever is secured to a shaft **204** for rotation therewith. This shaft extends across the machine. The other end of the shaft **204** is provided with a second elevator lever similar to the lever **202**. In other words, the rotation of the elevator lever **202** will rotate both elevator levers due to their interconnection by means of shaft **204**.

Referring now to Figure 11, the frame **40** is provided with a pair of flanges **206** which are embraced on opposite sides thereof by rollers **208**. These rollers are carried by shafts **210** supported by an elevator carriage **212**. It is understood, of course, that the construction

on the opposite side of the machine is identical to that in Figure 11, one side being shown in an enlarged perspective view for purposes of clarity. A shaft **214** extends across the machine supported by the elevator carriages **212**. The ends of this shaft are connected by links **218** to the upper ends of the elevator levers **202** by means of pins **217**, one at each side of the machine. When the elevator levers **202** rotate in a clockwise direction, as viewed in Figures 4 and 11, the elevator carriages will move downwardly carrying the shaft **214** downwardly. When the elevator levers rotate in a counterclockwise direction the elevator carriages will move upwardly carrying the shaft **214** upwardly. The elevator shelf **174** is rotatably mounted upon the shaft **214** and biased by spring **216** to rotate in a counterclockwise direction, as viewed in Figure 11. The elevator shelf **174** is provided with a depending projection **220** which is adapted to abut against a vertical stop member **222**, thus maintaining the elevator shelf normally in a horizontal position due to the action of the spring **216**, the depending projection **220** and the vertical guide member **222**. The frame **40** carries a bracket **224** adjacent the top of the travel of the elevator. A pin **226** is carried by the elevator shelf displaced from the shaft **214**. As the elevator moves upwardly the pin **226** will abut the flange **228** formed at the lower end of the bracket **224** and rotate the elevator shelf around the shaft **214** in a clockwise direction against the action of the spring **216**. This occurs adjacent the top of the motion of the elevator, as can readily be seen by reference to Figure 4. The tilting of the elevator shelf dumps a package of cigarettes from the shelf to a chute **230** leading to the delivery opening **20** from which the cigarettes can be easily removed by a purchaser.

At the beginning of a cycle of operation the elevator shelf is at the top of its stroke in dumped position. When the operation starts, the elevator moves downwardly to a position to receive a package of cigarettes when it is ejected by the ejector from a column and then moves upwardly to its upper position, as just described. During loading operations when it is desired to fill the containers for the respective columns with fresh cigarettes the elevator will interfere with this operation since it extends across the entire machine. An operator may move the elevator manually downwardly. This is permitted by the breaking of the joint between upper portion **192** and lower portion **188** of the transmission link against the action of spring **194**. It will be observed that we have arranged the parts so that the pivot **190** of this joint is slightly beyond dead center. In moving the elevator to its lower position the parts will again move beyond dead center so that the spring will hold the elevator in its downward position until after the loading. After the loading is completed the elevator is moved manually upwardly to the position shown in Figure 4.

Extending across the machine we provide a horizontal bar **240** normally biased to move upwardly by a spring **242**, as can be seen by reference to Figure 10. The ends of bar **240** extend through slots **239** and **241** in the side panels of the frame and may move vertically in these slots. Pivoted on each side of the machine around a pair of pivot pins **244** carried by the frame of the machine we provide a pair of levers **246**. One of these levers can be seen in Figure 4. Each lever carries a roller **248** which engages the upper edge of the elevator lever **202**. The other end of the lever **246** engages the upper edge of the bar **240**. It is understood that there are two levers **246**, one engaging the bar **240** at opposite ends of the machine. Whenever the elevator moves upwardly the lever **246** will be rotated in a clockwise direction around its pivot **244**. This will cause the bar **240** to move downwardly against the action of the spring **242**. Similarly, when the elevator moves downwardly the spring **242** will cause the bar **240** to move upwardly rotating in this action the lever **246** in a counterclockwise direction, as viewed in Figure 4. It will be seen that whenever the elevator moves upwardly the bar **240** will move downwardly, and when the elevator moves downwardly the bar **240** will move upwardly.

Each column **64** supported by the frame carries a supply of packages of cigarettes or similar merchandise **66**. In order to increase the capacity of the machine we mount a second or shift column including a rear plate **250** behind each front column **64**, as can readily be seen by reference to Figure 7. A plurality of spaced partitions **41** secured to the back of frame **40** by any convenient means such as welding or the like separate pairs of adjacent columns, each of which pairs includes a column **64** and its associated shift column. Each shift column includes a flexible front **251** pivotally supported on a shaft **252** carried by frame **40**, which front separates the packages in the shift column from those in column **54**. A pivot shaft **254** supports the rear plate **250**. The construction of these shift columns is shown and described in Patent No. 2,254,841, issued September 2, 1941, to Christian Gabrielsen. Flanges **253** on the dividing panels **41** support the packages in the shift columns. It will be understood that the rear plates of the shift columns extend downwardly between the supporting flanges of the associated shift columns. Each shift column is provided with a spring **256** which tends to urge the shift column to the position shown in the dotted lines in Figure 7. The rear plate **250** of the shift column is formed with a pair of narrow projections **258** which are adapted to engage a shift column latch **260** normally urged to rotate about a shaft **262** in a counterclockwise direction as viewed in Figures 7 and 10 through the action of a spring **264** secured to the lower rear portion **266** of the front column **64** by any suitable means such as a rivet or screws **265**. The shift column latch carries an extension **268** which engages a projection **270** formed at the lower end of the empty signal pull rod **272** which extends vertically upwardly. The upper end of the empty signal pull rod **272** is pivotally attached to a cam **274**. This cam is pivoted around pin **276**, extending across the machine and supported in the side plates of frame **40**, and is adapted to engage a follower plate **278** which forms part of and is carried by the switch carriage **280**. The top of the machine is provided with a cover **15** hinged around shaft **17** adjacent the top of the back cabinet wall **19**. A bracket **282** is secured to the cover by means of pin **284**. The bracket **282** slidably carries the switch carriage **280**. The switch carriage **280** is provided with an extension **286** one end of which carries a pin **288** to which is attached a spring **290** the other end of which is attached to a pin **292** carried by the switch housing **294** which is secured to the cover **15**. It will be seen that the spring will urge the carriage **280** to the right, as viewed in Figure 7. The cover **15** is provided with a window **18** for each column through which is viewed a display **294** showing the brand of cigarettes in that column. Secured to the switch carriage **280** by any suitable means such as rivets **297** we provide an empty signal **296** normally hidden from view. When the empty signal pull rod **272** is moved downwardly the cam **274** will engage the plate **278** and move the carriage to the left, as viewed in Figure 7. When this occurs the projection **298** carried at the end of lever **24** will move from its position underneath the plunger **22** to a position clear of the plunger and accordingly when the push button **16** is operated the plunger will not pivot the lever **24** about its pivot pin **300** since the plunger will not engage the projection **298**. At the same time the movement of the carriage **280** will carry the empty signal **296** into view through the window **18** covering the package display indicating the brand of cigarettes in the column associated with a particular push button

16. The empty signal may carry a legend, "This Column Empty," or merely the word "empty." It is to be understood that an empty-signal mechanism is associated with each of the respective columns of the machine.

Referring now to Figure 2, the link **155** which is secured to the bell crank **156** is connected to the coin register (not shown). The function of the link is to move the coin register to coin-accepting position.

If the money is deposited in the coin register it can be repossessed by a depositor by operating the coin return lever, in which case the coins will be returned to the coin return opening **11** shown in Figure 1.

Referring again to Figures 7 and 10, the shift column latch **260** carries a pin **304**. A dog **306**, provided with a hook **308**, is pivotally carried by the pin **304**. This dog **306** is so balanced that the hook **308** will normally hang by gravity clear of the bar **240**. A plate **310** is also pivoted about the pin **304**. The plate is normally balanced so that it will, when hanging vertically, engage the dog **306** to cause the hook **308** to engage the bar **240**. The plate **310** carries a lug **312** which normally rests against the lowermost package **67** of cigarettes through an opening provided in the rear of the front column **64**, as can readily be seen by reference to Figure 7. As long as there is a package of cigarettes in the front column the lug **312** will hold the plate **310** rearwardly, as can be seen by reference to Figure 7, thus allowing the dog to hang with its hook **308** clear of the bar **240**. As soon as the last package of cigarettes has been dispensed from the front column, the lug **312** will not be supported by this package and accordingly will permit gravity to swing the plate **310** to a vertical position. This takes place when the elevator is at the bottom position, that is, with the bar **240** in the upper position. When the elevator moves up it will be recalled the bar **240** moves down. As the bar moves down it will engage the hook **308** and cause the latch **260** to pivot in a clockwise direction, as viewed in Figures 7 and 10, against the action of the spring **264**. As soon as the latch is clear of the projections **258** of the rear shift column, the spring **256** will force the shift column to rotate to move its supply of cigarettes into the front column. In the course of this operation, the flexible front **251** and rear plate **250** move together under the action of spring **256** to the broken line positions shown in Figure 7. The packages in the shift column are then free to fall into the front column **64**. At the same time the downward motion of the shift column latch **260** under the influence of the bar **240** will pull the empty signal pull rod **272** downwardly due to the interengagement of the projection **268** with the lower end of the pull rod **272**. This downward motion of the rod **272** will pivot the cam **274** in a counterclockwise direction, as viewed in Figure 7, causing its end to engage the follower plate **278** thus moving the switch carriage **280** to the left and displaying the empty signal and disengaging the push button plunger **22** from the projection **298**. It will be recalled that the elevator rests in its upper position, that is, in a position to maintain the bar **240** in its lowermost position. This will ensure that at the end of the operation of the machine the empty signal will be displayed. After the last package of cigarettes has been dispensed from the front column the empty signal will remain in view when a purchaser deposits money in the coin slot **12**. During the operation of the machine, however, when the elevator moves downwardly the bar **240** will move upwardly, and during this small interval the empty signal will be moved to its clear position by the spring **290**. At this time, however, no harm is done and when the delivery cycle has been completed the empty signal will again be in position to warn a purchaser that that column is empty. It is to be understood that when packages are being transferred from the shift column to the front column **64**, packages from the shift column engage arm **312** to render dog **306** again inoperative when bar **240** is in its uppermost position. The empty signal and selector disabling means remain inoperative until all packages in the shift column as well as the packages in the front column have been dispensed.

During each operation of the machine the elevator-operating lever **178** will oscillate. Attached to pivot pin **186** we provide a link **185** which extends upwardly to a match-delivery mechanism which forms no part of the instant specification and is therefore not described. Its function is to deliver a booklet of matches with each purchase of a package of cigarettes.

It is believed that the operation of our machine is clear from the foregoing description. It is to be noted that even though our machine is housed in a console having a comparatively low height, cigarettes are still dispensed from the bottom of each column. This ensures that the oldest merchandise is vended first and prevents any of the merchandise from becoming stale. At the same time, the merchandise is delivered at a convenient height from the floor even though the bottoms of the columns are adjacent to the floor. The selection of the proper push button automatically selects merchandise from the column associated therewith. When a column is empty of merchandise not only is a user advised of this fact but the push button is rendered inoperative to close thereby ensuring against initiating the vending cycle. The pressing of the push button automatically starts a prime mover to actuate an operating bar adapted to operate the delivery mechanism for a particular column. The pressing of the push button, furthermore, automatically engages the delivery mechanism for a particular column with the common operating bar. The elevator is so phased that it will move to the bottom of a column to receive the merchandise being vended, elevate it to a convenient height and automatically dump it into a delivery chute. Means are provided for clearing the elevator from its upward position in which it normally rests in order to facilitate the loading of the machine. The shift columns are automatically operated when the front column becomes empty thus giving us a machine having an increased capacity.

It will be seen that we have accomplished the objects of our invention. We have provided a console merchandising machine which is low in height and in which a package delivered from the bottom of the stack is automatically elevated to a delivery opening raised from the floor a convenient height so that a purchaser may remove the package of cigarettes without stooping or bending. In our multicolumnar vending machine we have provided an elevator common to all of the columns and automatically operated to receive merchandise dispensed from the bottom of the column and to raise it to a convenient height and then dump it. We have provided a multicolumnar vending machine operated electrically in which the action is initiated by a push button and in which the push button is automatically rendered inoperative when the column is depleted of merchandise. At the same time we have provided an empty signal to advise a prospective user that a particular column is empty. We have provided pivoted ejectors which normally support a stack of merchandise in a column in such a manner that merchandise cannot be fished or shaken from the columns. We have provided means for coupling a particular ejector to a common operating bar in such a manner than when one ejector is coupled other ejectors are prevented from being coupled. We have provided an elevator for a multicolumnar cigarette machine in which the elevator is counterbalanced and is provided with a split transmission link enabling the elevator to be moved manually during the loading of the machine.

It will be understood that certain features and subcombinations are of utility and may be employed with-

out reference to other features and subcombinations. This is contemplated by and is within the scope of our claims. It is further obvious that various changes may be made in details within the scope of our claims without departing from the spirit of our invention. It is therefore to be understood that our invention is not to be limited to the specific details shown and described.

Having thus described our invention, what we claim is:

1. In a merchandising machine, a casing formed with a delivery opening at a convenient height above the bottom of the casing, a plurality of containers adapted to hold articles to be vended in stacked relation, the lower ends of the containers being positioned below the delivery opening, a respective ejector for each container mounted to eject an article from the bottom of the stack within each container, an electric motor, a common operator driven by the motor, a coupling means for each ejector, selector means for each container for actuating the coupling means for coupling the common operator to the ejector associated with its respective container and for concomitantly energizing the motor, an elevator, means for mounting the elevator in the casing normally adjacent the delivery opening and for reciprocation between the delivery opening and a position adjacent the lower ends of the containers, a shaft, a pair of levers carried by the shaft, means for connecting the levers to the elevator, a link driven by the motor in phased relation with the ejector to position the elevator to receive an article ejected from the bottom of the stack and to elevate the ejected article adjacent the delivery opening.

2. In a merchandising machine having article-holding containers, selector means including a push button, a switch, means engageable by the push button for operating the switch, means for rendering the switch-operating means inoperative and means responsive to the presence of an article in a container for placing the last named means in nonfunctioning condition, the construction being such that when a container is depleted of articles the switch-operating means is rendered inoperative.

3. In a merchandising machine having columns of articles and respective selector switch means therefor, a housing formed with a window adjacent each selector switch means, article-indicating indicia within the housing viewable through the window, a column empty signal for each selector switch means within the housing adjacent the window and normally hidden from view, means for rendering the selector switch means inoperative when the column of articles controlled by it is depleted, and means responsive to the inoperativeness of the selector switch means for moving the empty signal into view.

4. A merchandising machine including in combination a housing, containers adapted to hold articles to be vended positioned within the housing, ejectors for ejecting articles from said containers, a motor for actuating said ejectors, a shift column positioned in the housing behind each container, articles adapted to be positioned in each shift column, a spring for biasing each shift column into communication with its container, respective latches for holding each shift column in noncommunicating position, an unlatching means, means for driving the unlatching means from the motor, normally inoperative coupling means for coupling respective latches to the unlatching means, means responsive to the presence of an article in a container for maintaining the coupling means in inoperative condition, the construction being such that when a container is depleted of articles the normally inoperative coupling means will be

rendered operative to unlatch the respective shift column, means responsive to the coupling of said normally inoperative coupling means and to the depletion of articles from a container for rendering its selector means inoperative.

5. A merchandising machine including in combination a housing, containers adapted to hold articles to be vended positioned in said housing, ejectors for ejecting articles from the containers, a motor for actuating said ejectors, a shift column positioned in the housing behind each container, articles adapted to be positioned in each shift column, a spring for biasing each shift column into communication with its container, respective latches for holding each shift column in noncommunicating position, an unlatching means, means for driving the unlatching means from the motor, normally inoperative coupling means for coupling respective latches to the unlatching means, means responsive to the presence of an article in a container for maintaining the coupling means in inoperative condition, the construction being such that when a container is depleted of articles the normally inoperative coupling means will be rendered operative to unlatch the respective shift column, a normally hidden empty signal, means responsive to the coupling of said normally inoperative coupling means and to the depletion of articles from a container for rendering the selector means inoperative and for bringing the empty signal into view.

6. A merchandising machine as in claim 1 in which each ejector comprises a pivoted member having an arcuate article-supporting surface, a spring normally biasing the pivoted member into position under the bottommost article in the container whereby the stack of articles will normally be supported by the arcuate ejector surface within the container against displacement by inertia.

7. In a merchandising machine as in claim 1, means for pivoting the link intermediate its ends, a spring for maintaining the pivoted link elements in position forming substantially a straight angle whereby the link will transmit forces from the motor to operate the elevator, the construction being such that the elevator may be manually moved to pivot the link elements with respect to each other against the action of the spring.

8. A merchandising machine as in claim 1 in which the means for energizing the motor includes a switch, a solenoid adapted to be energized by the switch, a switch bar for operating the switch, means responsive to the selector means for actuating the switch bar, a cam for operating the coupling means, means connecting the solenoid to operate the cam, a second switch for energizing the motor and means responsive to movement of the cam for actuating the second switch.

References Cited in the file of this patent

UNITED STATES PATENTS

1,356,345	Dun Lany	Oct. 19, 1920
1,584,406	Street	May 11, 1926
1,848,755	Steiner	Mar. 8, 1932
1,881,961	Perkins	Oct. 11, 1932
2,238,725	Fry	Apr. 15, 1941
2,279,936	Brodie et al.	Apr. 14, 1942
2,358,563	Donaldson	Sept. 19, 1944
2,370,230	Cheechoo	Feb. 27, 1945
2,379,501	Steiner et al.	July 3, 1945
2,413,304	Fry	Dec. 31, 1946
2,546,690	Gabrielsen	Mar. 27, 1951
2,590,736	Tandler	Mar. 25, 1952
2,594,147	Fry	Apr. 22, 1952