SYSTEM OF RAISED WALL CONSTRUCTION

Filed Nov. 16, 1953 2 Sheets-Sheet 1

FIG. 5.

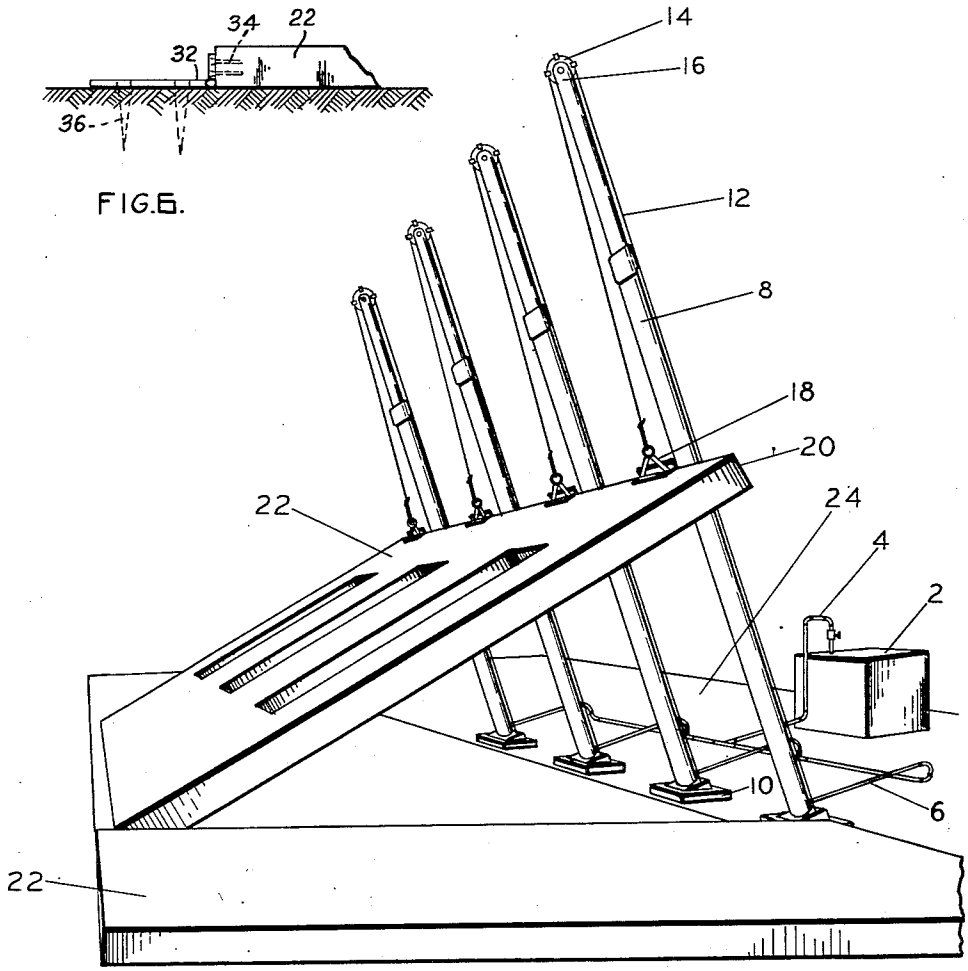

FIG 1

INVENTOR.
WALTER BRAUER
BY
C. M. McKnight

May 27, 1958 W. BRAUER 2,836,054

SYSTEM OF RAISED WALL CONSTRUCTION

Filed Nov. 16, 1953 2 Sheets-Sheet 2

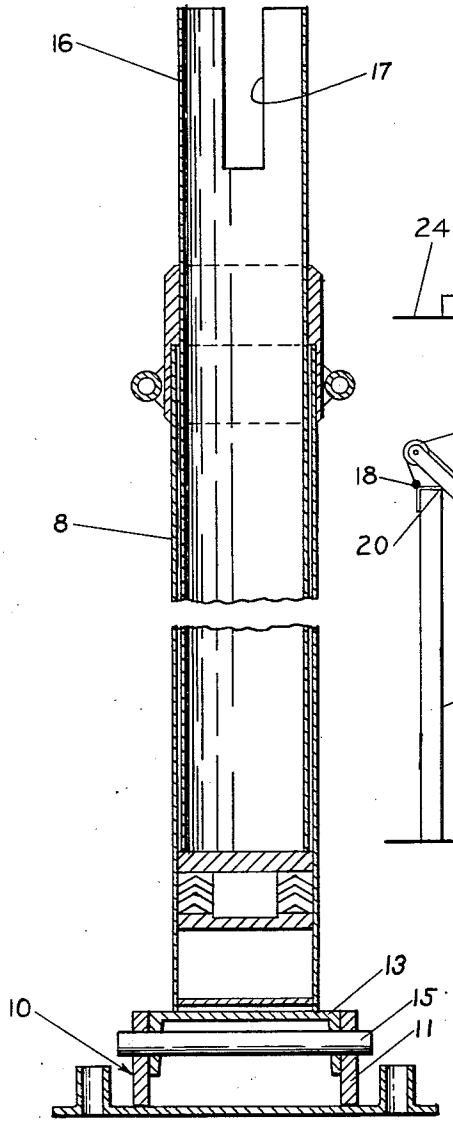

FIG 2

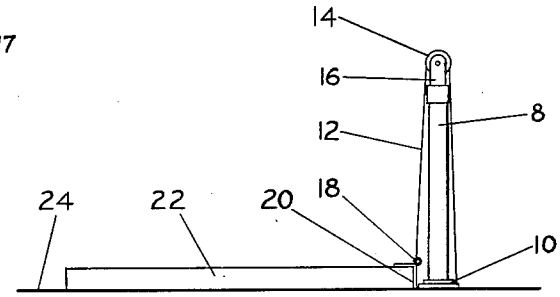

FIG 3

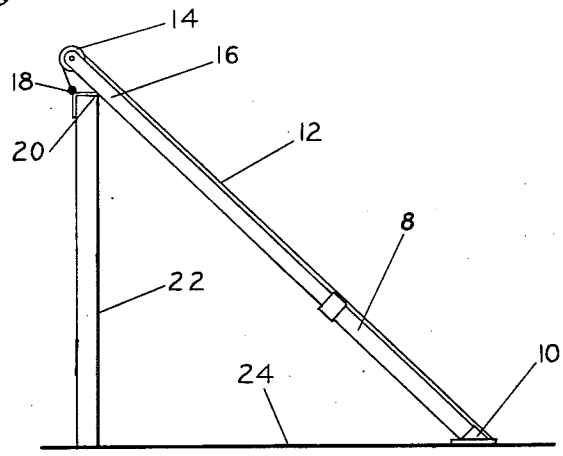

FIG 4

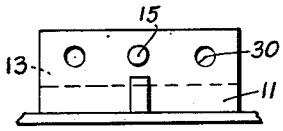

FIG. 5.

INVENTOR.
WALTER BRAUER
BY C. M. McKnight

United States Patent Office

2,836,054

Patented May 27, 1958

1

2,836,054

SYSTEM OF RAISED WALL CONSTRUCTION

Walter Brauer, Corpus Christi, Tex.

Application November 16, 1953, Serial No. 392,211

2 Claims. (Cl. 72—.5)

This invention relates to a system of constructing buildings and more particularly, but not by way of limitation, to a system of constructing buildings wherein concrete walls which have been poured on the floor of a building are raised to a vertical position. This application is a continuation-in-part of applicant's co-pending application Serial No. 126,419 filed November 9, 1949, and entitled, "System of Raised Wall Building Construction."

Cranes, winch trucks, or the like, utilizing cables, slings and a brace nearly as long as the wall being raised, are conventionally being used to raise concrete walls, but obviously a brace strong enough to raise a long wall without noticeable deflection would be expensive and heavy and would not be readily portable; for example, a brace weighing approximately three tons is required to raise a concrete wall fifty feet long by this method. In the event the brace deflects or the slings are of slightly unequal length, unequal lifting forces are applied to the top edge of the wall, thereby creating unequal stresses in the wall which cause the wall or slab to sag to the point of cracking or be in serious danger of doing so. It is readily seen that this method is limited to raising walls or slabs of comparatively short length.

This invention contemplates a system of raised wall building construction wherein preformed, or on site pouring of reenforced, light-weight concrete slabs are moved into position by hydraulic jacks secured in place on the floor of the building, and adjacent the top of the wall section to be raised. The hydraulic jacks are clamped to the top edge of the preformed wall sections whereupon hydraulic power is furnished to the jacks from flexible conduits from a portable source of motive power and drive gear pump unit in order to apply uniform pressure to the jacks causing an actuation thereof, whereupon the wall slabs are lifted vertically upward into position. During the movement of the wall section, the jacks are caused to pivot about their base in order to follow the top of the wall section.

An important object of this invention is to provide an improved system of raising concrete walls which have been poured on the floor of a building, the equipment for which is portable, compact and relatively inexpensive.

Another object of this invention is to provide an improved system of raising concrete walls which have been poured on the floor of a building, whereby uniform lifting forces are applied along the top edge of the walls, thereby preventing the walls from sagging and cracking during the raising operation.

And still another object of this invention is to provide an improved system of raising concrete walls which have been poured on the floor of a building which is not limited by the length of the wall.

Other objects and advantages of the invention will be evident from the following detailed description, read in conjunction with the accompanying drawings, which illustrate my invention.

2

In the drawings:

Figure 1 is a perspective view of the equipment during the raising operation.

Figure 2 is a sectional elevational view of the hydraulic jack unit.

Figure 3 is an elevational view illustrating the relative positions of a jack, cable and wall at the start of the raising operation.

Figure 4 is a similar view at the end of the wall raising operation.

Figure 5 is a detail view showing the pivotal arrangement of the jack unit.

Figure 6 is a detail view showing the securing means for the wall slab.

Referring to the drawings in detail a pumping unit **2** (Fig. 1) is connected by a header **4** and separate flexible conduits **6** to each of the hydraulic jack units **8** which are each pivotally mounted on its respective base **10**. A cable **12** is anchored at one end to the base **10** and passes through a rotatably mounted sheave **14** disposed in the movable extension member **16** of each jack **8**, and is adapted to be secured to a bracket or clamp **18** secured to the top **20** of a preformed concrete wall **22**. The base **10** of each of the jacks **8** may be temporarily secured to the floor **24** by any suitable means, such as securing pins or the like (not shown) acting to prevent the jacks from sliding during pivotal movement thereof. Suitable braces (not shown) hold the wall **22** in a vertical position after it has been raised.

Operation

Each base **10** of the plurality of hydraulic jacks **8**, (the exact number depending upon the dimensions of the wall to be raised) are secured to the floor **24** in a spaced relation adjacent to and along the top **20** of a horizontally disposed performed concrete wall **22**. The brackets **18**, cables **12**, conduits **6**, header **4** and pumping unit **2** are connected in the manner as illustrated in Fig. 1. To raise the wall **22**, fluid is supplied under pressure by the pumping unit **2** through the header **4** and conduits **6** to the lower portion of the hydraulic jacks **8**, thereby extending the member **16** which causes pulling of the cables **12** through the sheaves **14** and raising the top **20** of the wall **22**. As force is exerted on the cables **12**, each of the jacks **8** are pivoted about their respective bases **10** so as to be disposed substantially adjacent the top **20** of the wall **22** and will continue to pivot as the wall **22** is moved about its base from a horizontal to a vertical position where it then may be maintained by suitable braces (not shown). The fluid pressure in the jacks **8** may then be relieved along with an unclamping of the clamps **18** allowing the extending member **16** to contract, and the equipment to be disassembled and moved to another location.

It is readily seen that since the jacks **8** are hydraulically interconnected, the fluid pressure in each jack **8** will be equal, thereby maintaining a uniform lifting force along the top **20** of the wall **22** thereby eliminating any sagging or cracking of the wall **22** caused by unequal lifting stresses.

This system is not limited by the length of the wall **22** because, as the length is increased, the number of jacks **8** may be increased accordingly. As an example of the size of walls which may be raised by this method, an eight foot wall, in height, fifty to sixty feet long, can be raised by four jacks, and all of the required equipment can be transported by a pick-up truck.

Referring to Fig. 2, it will be apparent that base **10** may be of any suitable type but is preferably provided with upstanding apertured flanges **11** cooperating with a movable bracket **13** by means of a suitable pivot pin

15. The extension member 16 is preferably provided with a slotted portion 17 for receiving and securing the pulley 14 in any suitable manner (not shown). In order that the pivotal movement of the jacks may be controlled for any specific direction, it is preferable to off-set the pivot pin 15 at the base 10 slightly off center as shown in Fig. 5 from the vertical center line of the jack so that the jack cable will have a tendency to pull the jack in a direction toward the wall being lifted until it contacts the top edge wall of the wall section. This off-set may vary from one-half inch to one inch, depending upon the size of the jack. The aligned apertures 30 between the base 11 and the bracket 13 permit the off-set disposition of the pin 15. As the wall section rises, its top edge slides along the smooth exterior of the jack housing and the two are held together by the force effected by the off-set. The base of the jack presses down on the floor slab as the weight of the wall panel is taken by the jack, and any sliding tendency of the jack base is overcome by the securing pins or bolts (not shown). However, very little slippage is effected because the weight of the wall panel as it is raised and the horizontal force to cause slipping of the jack decreases accordingly.

From the foregoing it will be apparent that preformed wall slabs 22 may be constructed by on-site pouring in forms (not shown) disposed on the floor 24, or in any other suitable manner so desired. Furthermore, the preformed wall slabs 22 are preferably formed of lightweight aggregate slag such as is in common use in building construction at the present time, however, it is to be understood that the construction of the wall slabs does not form any part of the invention except that the slabs may be provided with any suitable means along the top 20 for assisting the clamping of the cable 12 thereto. In order to prevent any sliding of the wall section 22 during the raising thereof, the wall sections 22 may be pivotally secured in any suitable manner such as by a hinge member 32 having securing pins 34 connecting with the slab 22 and additional securing means 32 engaging in the ground or to the floor upon which slabs 22 are resting. Obviously any suitable hinge member secured between the wall section and the floor or any other fixed medium will permit pivoting movement of the wall section 22 and also prevent any sliding during the raising operation. Other means of preventing slippage of the wall section during raising may be provided with braces (not shown) provided at spaced intervals along the outside of the wall section 22 limiting any sliding movement of the wall section 22 as it is raised. The latter method is not as convenient as the hinging of the wall section.

It will be apparent that the system of raised wall construction provides for the raising of a preformed concrete slab from a horizontal to a vertical position by hydraulic means in order to maintain a uniform tension in the auxiliary lifting apparatus, such as the cables and the like, and thereby preclude any possibility of slack or non-uniformity therein. The pivotal movement of the jack units 8, so as to maintain the jack in juxtaposition adjacent the top 20 of the wall slab 22 materially assists in providing the uniformity of tension on the lifting parts during the raising operation.

Alluding further to the hydraulic jack 8, an operational feature is provided in anchoring of the cable 12 to the non-extending portion of the jack so that it cooperates with the pulley 14 in such a manner that the cable will move substantially twice the distance of the extending portion 16 of the jack because the lifting end of the cable surrounding the pulley travels twice as fast as the extending portion. This arrangement permits the overall length of the hydraulic jacks to be reduced and provides for lighter jacks and easier portability.

Changes may be made in the combination and arrangement of parts as heretofore set forth in the specification and shown in the drawings, it being understood that any modification in the precise embodiment of the invention may be made within the scope of the following claims without departing from the spirit of the invention.

I claim:

1. In combination with a horizontally disposed concrete wall section, a plurality of hydraulic jacks arranged in spaced relation adjacent one marginal edge of the wall section, a clamp on said marginal edge opposite each of said jacks, each of said jacks comprising a stationary base member, a lower tubular member pivotally secured to the base member, an upper extensible member telescopically disposed within the lower tubular member, a sheave rotatably secured to the outer extremity of the upper extensible member and a cable secured to the base member and extending over the sheave into connection with the clamp disposed opposite the jack, and conduit means providing common communication between the interior of the lower tubular members of each of the jacks below the upper extensible members whereby hydraulic fluid may be directed into each of the lower tubular members for simultaneously extending each of the upper extensible members, each cable movable with its respective extensible portion of the jack to uniformly pivot the wall section to a vertical position.

2. In a system for raising a horizontally disposed concrete wall section comprising the wall section, a plurality of hydraulic jacks arranged in spaced relation along one marginal edge thereof, each of said jacks comprising a base member, a lower tubular member pivotally secured to the base member, an upper extensible member telescopically disposed within the lower tubular member, a sheave member rotatably disposed at the upper end of the extensible member and a cable secured to the base member and extending through the sheave, a clamp member secured to the marginal edge of the wall opposite each of the spaced jacks and connecting with a respective cable, and means having common communication between the interiors of said tubular members and supplying hydraulic fluid to each of the jack members for simultaneously extending each of the upper extensible members, said sheaves movable with said upper extensible members for pulling the cable and pivoting the wall toward a vertical position, and said pivotal lower tubular members providing a pivotal movement for each of the jacks in a direction toward the edge of the wall section for uniformly pivoting the wall toward a vertical position.

References Cited in the file of this patent

UNITED STATES PATENTS

1,754,873	Blackwood	Apr. 15, 1930
2,336,148	Zoll	Dec. 7, 1943
2,415,709	Sechand et al.	Feb. 11, 1947
2,449,781	Jameson et al.	Sept. 21, 1948

FOREIGN PATENTS

711,894	France	1931

OTHER REFERENCES

Construction Methods and Equipment, vol. 20, No. 7, p. 33, July 1938.

Construction Methods, pp. 108 and 109, March 1946.