April 29, 1958 H. S. GAINES 2,832,140

DRAFTING DEVICE

Filed Feb. 2, 1953 2 Sheets-Sheet 1

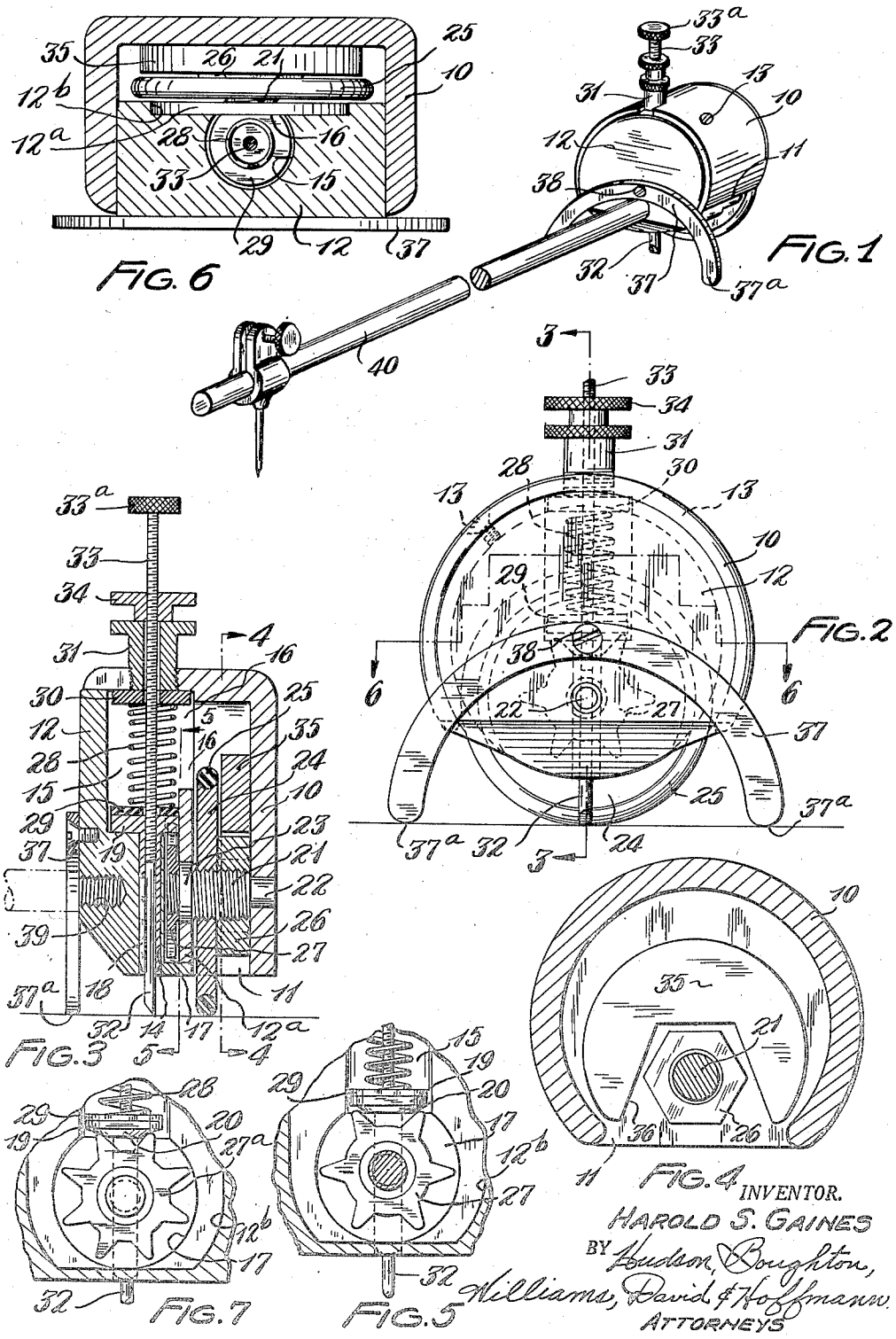

INVENTOR.
HAROLD S. GAINES
BY Houdson, Boughton, Williams, David & Hoffmann
ATTORNEYS

April 29, 1958 H. S. GAINES 2,832,140

DRAFTING DEVICE

Filed Feb. 2, 1953 2 Sheets-Sheet 2

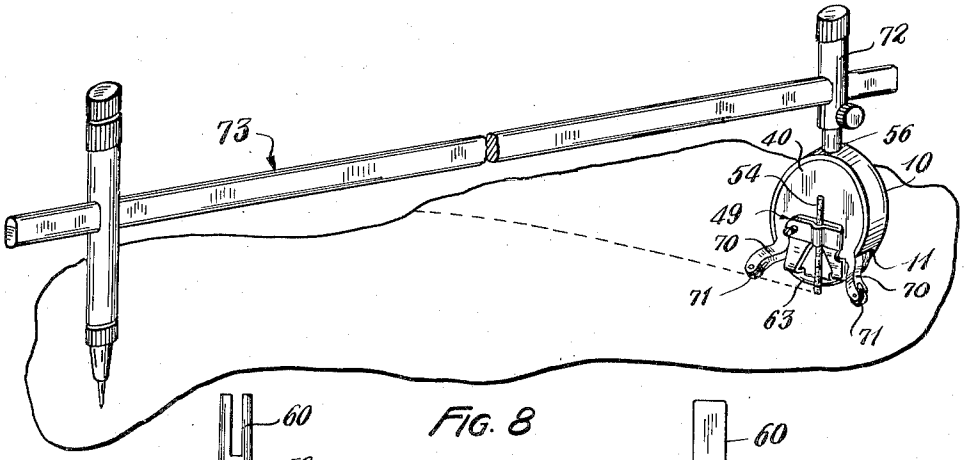

FIG. 8

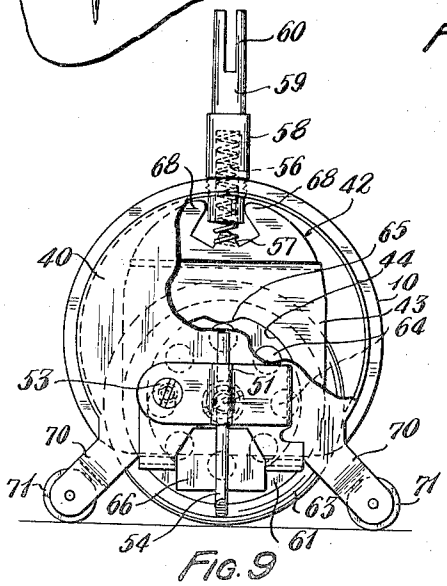

FIG. 9

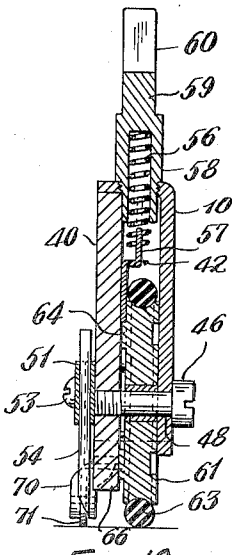

FIG. 10

FIG. 15

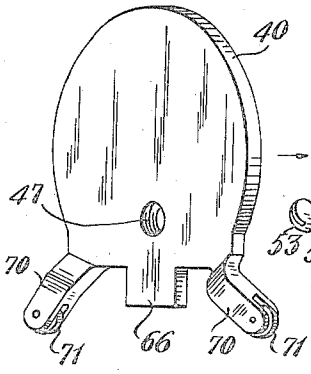

FIG. 11

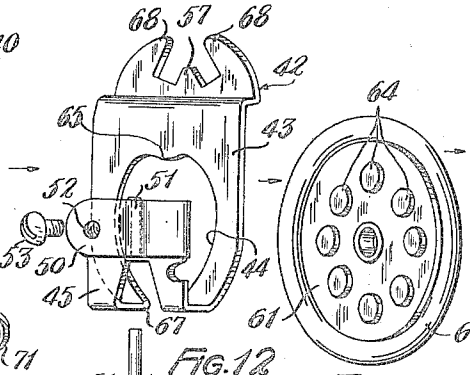

FIG. 12

FIG. 13

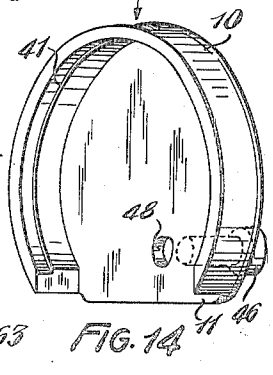

FIG. 14

FIG. 16

INVENTOR.
HAROLD S. GAINES
BY Hudson, Boughton, Williams, David & Hoffmann
ATTORNEYS

United States Patent Office

2,832,140

Patented Apr. 29, 1958

2,832,140

DRAFTING DEVICE

Harold S. Gaines, Cleveland, Ohio, assignor of one-fifth to Kermit P. Frame, Geauga Lake, Ohio

Application February 2, 1953, Serial No. 334,435

7 Claims. (Cl. 33—27)

This invention relates to a drafting device and more particularly to a drafting device which may be used to produce dash or dotted lines or continuous lines either straight or curved and is a continuation-in-part of my copending application Serial No. 308,034, filed September 9, 1952, and entitled "Drafting Device," now abandoned.

In making mechanical drawings it is difficult for the draftsman unless very skilled and extremely careful to make dash lines wherein the dashes are of uniform length and spacing. Also in the case of large drawings wherein long straight dash lines must be made or curved lines of large radius must be drawn, it is very time-consuming and tedious for the draftsman to produce manually these long straight or large radius curved dash lines. In addition, the length of the dashes and the spacing therebetween as well as the density of the lines usually will not be uniform.

An object of the invention is to provide a drafting device which enables the draftsman to produce quickly straight or curved broken lines of uniform density and wherein the dashes are of equal length while the spacings between the dashes are uniform.

Another object is to provide a drafting device which can be employed to produce accurately straight or curved dash lines, particularly such lines of long length or radius, thus effecting substantial saving in time in the production of large size drawings as well as improving the quality of the drawings.

A further object is to provide a drafting device such as referred to in the preceding objects, which may be expeditiously adjusted to vary the density of the lines produced thereby as well as the length of the dashes and spacings forming the line.

A still further object is to provide a drafting device which can be readily converted from one capable of producing dash lines to one which will produce continuous lines.

Another object is to provide a drafting device such as referred to in the preceding objects which may be readily used against a straight edge to produce a straight line, either continuous or dash, or can be quickly mounted upon the end of a compass, such as a beam compass, to produce a curved line, either continuous or dash.

Another object is to provide a drafting device such as hereinbefore referred to and wherein by interchanging certain of the parts various types of dash lines can be produced.

A more general object is to provide a drafting device as referred to in the preceding objects and which is of simple construction, is compact and can be readily adjusted and manipulated by the draftsman to produce the various types of lines desired.

Further and additional objects and advantages not hereinbefore referred to will become apparent hereinafter during the detailed description of embodiments of the invention which is illustrated in the accompanying drawing wherein,

Fig. 1 is a perspective view of the device embodying the

invention with said device being illustrated as mounted on the end of the arm of a beam compass.

Fig. 2 is a side elevational view of the device shown in Fig. 1 on a larger scale and detached from the arm of the beam compass and looking at the device from the left hand side of Fig. 1.

Fig. 3 is a vertical sectional view taken substantially on line 3—3 of Fig. 2 looking in the direction of the arrows.

Fig. 4 is a vertical sectional view taken substantially on line 4—4 of Fig. 3 looking in the direction of the arrows.

Fig. 5 is a fragmentary vertical sectional view taken substantially on line 5—5 of Fig. 3 looking in the direction of the arrows.

Fig. 6 is a horizontal sectional view taken substantially on irregular line 6—6 of Fig. 2 looking in the direction of the arrows.

Fig. 7 is a view similar to Fig. 5 but illustrating the use of a modified form of cam from the cam shown in Fig. 5 for the purpose of producing a different form of dash line than would be produced by the cam illustrated in Fig. 5.

Figs. 8, 9 and 10 illustrate the preferred embodiment of my invention and correspond, respectively, to Figs. 1, 2 and 3 of the first illustrated embodiment, and

Figs. 11, 12, 13, 14, 15, and 16 are perspective views of the elements of my device showing the order of assembly and their assembled relationship.

The device illustrated in Figures 1 to 7 comprises a cup-like housing member **10**, the lower portion of which including its side wall is cut away as indicated at **11**. A body member **12** fits within the cup-shaped housing member **10** and is held in position therein by means of securing screws **13** carried by the cup-shaped member **10**. The body member **12** is provided with a bore **14** communicating with a counterbore **15** which has a portion of its wall cut away as indicated at **16** in Figs. 3 and 6. The body member **12** to the right of the bore **14**, as viewed in Fig. 3, is provided with a recess **17** for a purpose later to be explained. A split tubular lead holder or collet **18** is slidable in the bore **14** of the member **12** and its upper end extends within the counterbore **15** and has an enlarged circular head **19** with a portion of its circumference flattened where it contacts the wall of the counterbore below the cutaway portion **16** of the wall for the purpose of holding the lead holder against rotative movement. The lower side of the head **19** is provided with a cam follower lug **20** extending downwardly from the head toward the recess **17**.

A shaft **21** is provided with a smooth cylindrical reduced end **22** that is rotatably supported in a bearing opening formed in the bottom of the member **10** and with an enlarged smooth cylindrical portion **23** rotatably supported in an opening formed in that part of the member **12** that constitutes the right hand wall of the recess **17** as viewed in Fig. 3. The right hand wall of the recess **17** is shown as formed by a separate plate **12**^{a} that is removably supported by the body **12** as indicated at **12**^{b}. The shaft **21** freely rotates on its two axially spaced bearing portions **22** and **23** and has fixed thereto adjacent its bearing portion **23** a wheel **24** which mounts on its circumference or concave rim a suitable tire member such as the rubber O-ring **25**. A nut **26** is mounted on the shaft **21** intermediate the bottom of the housing member **10** and the wheel **24** and maintains the wheel in the proper position on the shaft. The shaft **21** extends beyond the bearing portion **23** into the recess **17** and has fixed to it a cam **27** which, in this instance, is shown as in the nature of a star wheel with six angularly spaced teeth or projections. The teeth or projections on the cam **27** cooperate with the cam follower **20** on the head **19** of the lead holder **18** to raise the lead holder upwardly or to permit it to be lowered under the action of a coil spring

28 located in the counterbore 15 and abutting a washer 29 on the head 19 and a washer 30 held against the upper end of the counterbore 15.

An adjusting screw 31 is mounted in a threaded opening in the cup-shaped housing member 10 and bears against the washer 30 and said screw can be adjusted inwardly or outwardly to vary the tension of the spring 28. A length of lead 32 is mounted in the lead holder 18 and the length that said lead projects from the lower end of the lead holder can be adjusted by a screw rod 33 extending freely through the nut 31, counterbore 15 and spring 28 and into the lead holder 18 so as to engage the inner end of the lead 32. The screw rod screws into a threaded portion of the lead holder and it will be obvious that the turning of the rod in the proper direction by the knurled knob 33*a* at its outer end will regulate the length of the lead projecting from the lead holder.

A nut 34 is threadedly mounted on the rod 33 outwardly of the nut 31 and moves with said rod as the lead holder reciprocates but limits the movement of the rod 33 and lead holder 18 in one direction, i. e., the direction in which these parts are urged by the spring 28.

A plate 35 is secured to the bottom wall of the cup-shaped member 10 internally thereof and is cutaway as indicated at 36 so as to embrace the nut 26, the purpose of said plate being later explained.

A substantially semi-cylindrical strip 37 is secured to the outer side of the member 12 by a suitable securing element such as the screw 38 located midway of the ends of the strip 37 and extending into the body of the member 12. The opposite ends 37*a* of the strip 37 are rounded and are located in the same horizontal plane for a purpose later to be explained. The member 12 is provided with a threaded recess 39 into which can be screwed the adapter of the arm 40 of a beam compass well understood in the art, said threaded recess 39 being axially aligned with the shaft 21. The manner in which the device is employed will now be explained.

It will be assumed that the device is to be used in the production of a curved dash line and therefore the beam compass 40 is attached to the device by screwing the adapter portion on the end of compass arm into the threaded recess 39 as clearly indicated in Fig. 1. The nut 31 is adjusted to provide the desired tension on the spring 28 to produce lines of the desired density. Also the rod 33 is adjusted to cause the lead 32 to project the proper distance from the lower end of the lead holder 18.

It will be understood that the end of the projecting lead when the lead holder is in its lowermost position should be in the plane on which the tire 25 of the wheel 24 rolls or it may be varied slightly from the plane according to whether heavy or light lines are desired. The draftsman now adjusts the center of the beam compass and then subscribes the curved line by swinging the beam compass about its center while the tire 25 of the wheel 24 rolls on the surface of the paper on which the drawing is being made. The rounded ends 37*a* of the arcuate strip 37 also travel along the paper and hold the device in the proper vertical position. As the wheel 24 rotates the teeth of the cam 27 engage the lug 20 of the head 19 of the lead holder and raise the lead holder against the action of the spring 28, thus raising the lead 32 out of engagement with the paper. As the teeth of the rotating cam 27 pass off of the lug 20 the spring 28 lowers the lead holder thus bringing the lead into contact with the paper so that dash lines are produced on the paper by the lead when in contact therewith while the spaces between the dashes are produced when the lead is out of contact.

If the draftsman desires to produce a curved continuous line all that he needs to do is to slip the lower portion of the tire 25 from the rim of the wheel 24 and onto the spaced end portions of the plate 35 adjacent to the cutout 36 in said plate. This means that the tire and wheel 24 do not contact the paper and do not rotate as the device is moved over the paper, and hence the spring 28 maintains the lead in continuous engagement with the paper to thus produce a continuous line.

When it is desired to use the device to produce a straight dash line or a straight continuous line the same procedures are followed except that the device is detached from the beam compass and the strip 37 is maintained against a straight edge while the device is moved therealong.

The length of the dash lines and the length of the spaces therebetween produced by the device can be varied by changing the cam 27 as, for instance, from the six toothed cam 27 indicated in Fig. 5 to the eight toothed cam 27*a* indicated in Fig. 7.

The preferred embodiment of my device is illustrated in Figs. 8 to 17 of the drawing, the housing of which comprises a cup-shaped member 10 as in the previously described embodiment with the lower portion thereof including the side walls being cut away as indicated at 11. The cup-shaped member 10 is provided with a front or cover 40 which rests against a shoulder 41 on the internal side walls of the cup-shaped member 10.

Within the housing and adjacent the front or cover 40 is a cam follower 42. The cam follower 42 comprises a plate 43 having an opening 44 therein and an extension 45, L-shaped in cross section, at the lower end thereof. The L-shaped extension 45 embraces the lower portion of the cover 40 and is movable with respect thereto. A bolt 46 passes through aligned apertures 47 and 48 in the cover 40 and the bottom of the cup-shaped member, respectively, and through the opening 44 in the cam follower. The aperture 47 is provided with internal threads which are engaged by the bolt 46 to hold cover 40 in place on the shoulder 41 of the cup-shaped member 10.

The upper external part of the L-shaped extension 45 carries a lead holder 49 which comprises a tab 50 doubled back on the extension and provided with an internal vertical trough 51. The free end of the tab 50 is provided with a hole 52 to enable the end to be secured by a bolt 53 to the body of the L-shaped extension. By loosening the bolt 53 a lead 54, or other marking means, may be inserted into the trough 51 and then held therein by tightening the bolt to clamp the lead 54 between the doubled back tab 50 and the body of the L-shaped extension 45.

A spring 56 is provided to bias the cam follower and lead holder in a downward direction. The lower end of spring 56 is mounted on a protuberance 57 extending upwardly from an offset portion at the top of the cam follower plate 43. The upper end of spring 56 is supported within a tubular spring holder 58, threadedly mounted in the top of the housing and extending outwardly and inwardly thereof. The tube 58 is closed at the outer end and has a rod 59 extending outwardly therefrom which has an axial slot 60 running inwardly from its outer end. The purpose of the slotted rod will be hereinafter explained. The tension of the spring 56 will force the cam follower plate 43, and consequently the lead holder 49, downwardly so that the end of the lead 54 will engage the drawing surface.

A solid wheel 61 is rotatably mounted on the aforementioned bolt 46 within the cup-shaped member 10 intermediate the cam follower plate 43 and the bottom of member 10. The outer periphery of the wheel 61 is concave forming a rim to support a tire 63. The wheel extends below the housing so that it may engage the surface of the drawing on which the device is being used. The side of the wheel has cam means comprising buttons 64 affixed thereto, protruding toward the front of the housing, and extending into the opening 44 in the cam follower. The buttons 64 are spaced one from each other preferably along the side of the wheel 61. The size of the buttons and their spacing determine the nature of the lines drawn by the instrument.

The uppermost point of the opening in the cam follower is provided with a bulge 65 which extends inwardly of the opening and is adapted to engage buttons

64. The buttons 64 are spaced, preferably on the circumference of a circle, so that the bulge will engage each button successively, and ride up thereon as the wheel is rotated. This will cause the cam follower and the lead 54 to move up and down as the bulge 65 rides up and down on successive buttons.

In order to guide the cam follower plate 43, the cover 40 is provided with a lug 66 depending downwardly therefrom and adapted to fit closely into an opening 67 in the bottom of the L-shaped extension 45. Guide fingers 68 are also provided for the upper part of plate 43, one on either side of the protuberance 57. These fingers have a rounded edge and are adapted to slide upon a portion of the tubular spring holder 58 which extends inwardly of the housing.

For the purpose of enabling the user to easily guide the lead along the proper line on the drawing surface the cover member is provided with two legs 70, each of which extends downwardly from opposite sides thereof. A roller 70 may be mounted at the end of each leg to facilitate movement of the device along the drawing surface. The points of contact of the rollers 70 and wheel 61 also determine a plane which is perpendicular to the lead 54 thus assuring that the device and the lead 54 will be maintained in a position substantially perpendicular to the drawing surface.

The device of the present embodiment may be mounted at the end of the beam compass arm by inserting the arm of the beam compass 40 into the slotted rod 59 extending upwardly from the housing. The arm may be secured in the slot 60 by means of a cap 70 which is adapted to fit over the end of the slotted rod and the arm and secured in place by a setscrew 72.

From the above description it will be seen that as the device is moved along the drawing surface, the wheel 61 is rotated which in turn brings the buttons 64 carried by the wheel into contact with the bulge 65 forming the cam follower surface of the cam plate 43. As the follower surface rolls up on the buttons 64 the plate 43 is moved upwardly against the action of the spring 56 which is forcing the plate in a downward direction. When the plate is moved upwardly on a button 64 the lead 54 is lifted from the drawing surface and is then returned to the drawing surface as each button moves out of contact with the cam follower surface. The frequency of the lines and their length may be controlled by the size, shape and distribution of the buttons or other cam means carried by the side of the wheel. The length of the lines will also be determined by the length of the lead below the tab 50 of the lead holder 49. When the device is in use, this length will determine the position of the cam follower plate 43 with respect to the buttons 64, thereby determining the point and time of engagement of the buttons 64 and the cam following surface. It will be seen that as the length of the lead below the tab 50 is increased, the cam plate 43 will be raised with respect to the buttons 64 causing the contacting surface of the buttons to decrease, thereby resulting in longer dashes. The length of lead projecting from the housing will likewise determine the length of the individual lines in the first described embodiment. The heaviness of the lines may be controlled by regulating the tension on the spring 56. Thus if the tubular holder is threaded outwardly from the housing less tension will be applied to the lead when it is in a projected position resulting in a lighter mark.

As in the first described embodiment, if it is desired to make a continuous line with my device the tire 63 may be rolled off the wheel 61 for that portion of the circumference which extends beyond the housing. The wheel will then lose contact with the drawing surface and the spring 56 will force the lead into continuous engagement with the surface.

Although a preferred embodiment of the invention has been illustrated and described herein, it will be understood that the invention is susceptible of various modifications and adaptations within the scope of the appended claims.

Having thus described my invention, I claim:

1. A drafting device comprising a housing formed of a cup-shaped member and a cover member, a cam follower plate slidably mounted within said housing and having at the lower end thereof an L-shaped extension embracing said cover and movable with respect thereto, a marking device holder carried by said extension externally of said housing and adapted to hold a marking device in position to mark on a drawing surface, a spring means acting on said plate to force said marking device into contact with said surface, a shaft supported between said cover and the bottom of said cup-shaped member, a wheel rotatably mounted within said housing on said shaft, a portion of the circumference of said wheel extending beyond the lower part of said housing to engage the said drawing surface, cam means fixed to said wheel cooperating with said cam follower plate to raise the plate against the force of said spring and lift said marking device from said surface.

2. A drafting device as in claim 1 wherein said plate has two legs extending downwardly therefrom, and rollers supported by said legs and adapted to engage said surface, the points of engagement of the circumference of said wheel and said rollers determining a plane substantially perpendicular to said marking device thereby holding the drafting device and the marking device in substantially vertical position.

3. The drafting device as defined in claim 1 wherein said marking device holder comprises a tab doubled back on the body of said L-shaped extension, said tab having a substantially vertical trough therein adapted to receive said length of marking device.

4. The drafting device as defined in claim 3 wherein said cover has a depending lug and said extension has an opening in the bottom therein, said lug being adapted to closely fit said opening to guide the movement of said plate and marking device holder.

5. A drafting device comprising a housing formed of a cup-shaped member and a cover member, a cam follower plate slidably mounted within said housing and having at the lower end thereof an L-shaped extension embracing said cover and movable with respect thereto, a marking device holder carried by said extension externally of said housing and adapted to hold a marking device in position to mark on a drawing surface, a spring means acting on said plate to force the marking device into contact with said surface, a shaft supported between said cover and the bottom of said cup-shaped member, a wheel rotatably mounted within said housing on said shaft, a portion of the circumference of said wheel extending beyond the lower part of said housing to engage the said drawing surface, cam means fixed to said wheel cooperating with said cam follower plate to intermittently raise the plate against the force of said spring and lift said marking device from said surface, the position of said cam plate with respect to said cam follower being determined by the length of the marking device extending downwardly from said holder thereby determining the time of engagement of said cam means with said cam plate.

6. A drafting device comprising a housing, a shaft rotatably supported in said housing, a wheel fixed to said shaft and having its circumference engaging the drawing surface on which the device is being used, a plate slidable in said housing and adapted to hold a marking device and acting as a cam follower, said plate having an opening therein and mounted intermediate the front of said housing and said wheel, said plate bulging inwardly of said opening at the top thereof to form the cam follower surface, spring means in said housing acting to move said plate in a direction to project the end of marking device held thereby beyond an end wall of the housing

into contact with said drawing surface, and a cam fixed to said shaft to rotate therewith and intermittently cooperating with said cam follower surface to raise the latter against the action of said spring means to move the end of the marking device held by said plate out of engagement with said drawing surface, said cam comprising a plurality of buttons spaced one from each other on the side of said wheel and extending into said opening and adapted to engage said cam follower surface when said wheel is rotated.

7. A drafting instrument comprising a frame, a wheel rotatably supported by said frame and rotatable about an axis and adapted to roll on a drawing surface, cam means coaxial with said wheel and connected thereto for rotation therewith, a cam follower supported by said frame for rectilinear movement toward and away from said surface and cooperating with said cam means to intermittently move said cam follower toward and away from said surface upon the rotation of said wheel, means for yieldably urging said cam follower into engagement with said cam means, a holder for a marking device connected to said cam follower for movement therewith, said holder including means for adjusting the marking device toward and away from said drawing surface, support means extending from said frame and adapted to engage said drawing surface when said instrument is in drawing position at two points spaced from the plane of said wheel whereby the points of contact of said supporting means and said wheel with said surface determine a plane to maintain said instrument in drawing position, and removable tire means constituting the outer periphery of said wheel whereby said wheel may be operatively disengaged from said surface and the instrument rendered operative to draw continuous marks.

References Cited in the file of this patent

UNITED STATES PATENTS

541,553	Knight	June 25, 1895
1,314,879	Lewis	Sept. 2, 1919
2,036,716	Nelson	Apr. 7, 1936
2,081,439	Simmons	May 25, 1937
2,129,979	Westervelt et al.	Sept. 13, 1938
2,295,787	Hirth	Sept. 15, 1942
2,452,241	Jantzen	Oct. 26, 1948
2,557,212	Alfrey	June 19, 1951

FOREIGN PATENTS

3,421	Great Britain	1897
7,077	Norway	Mar. 6, 1899
366,705	France	Aug. 4, 1906
92,160	Switzerland	Dec. 16, 1921