Sept. 3, 1957 T. MONGELLO 2,805,066

TARGET ELEVATING MECHANISM

Filed June 10, 1954 2 Sheets-Sheet 1

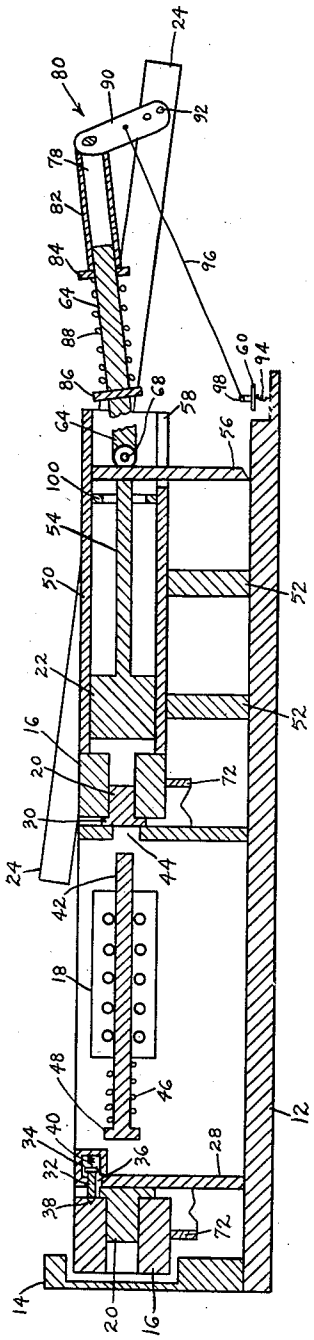

Fig. 3

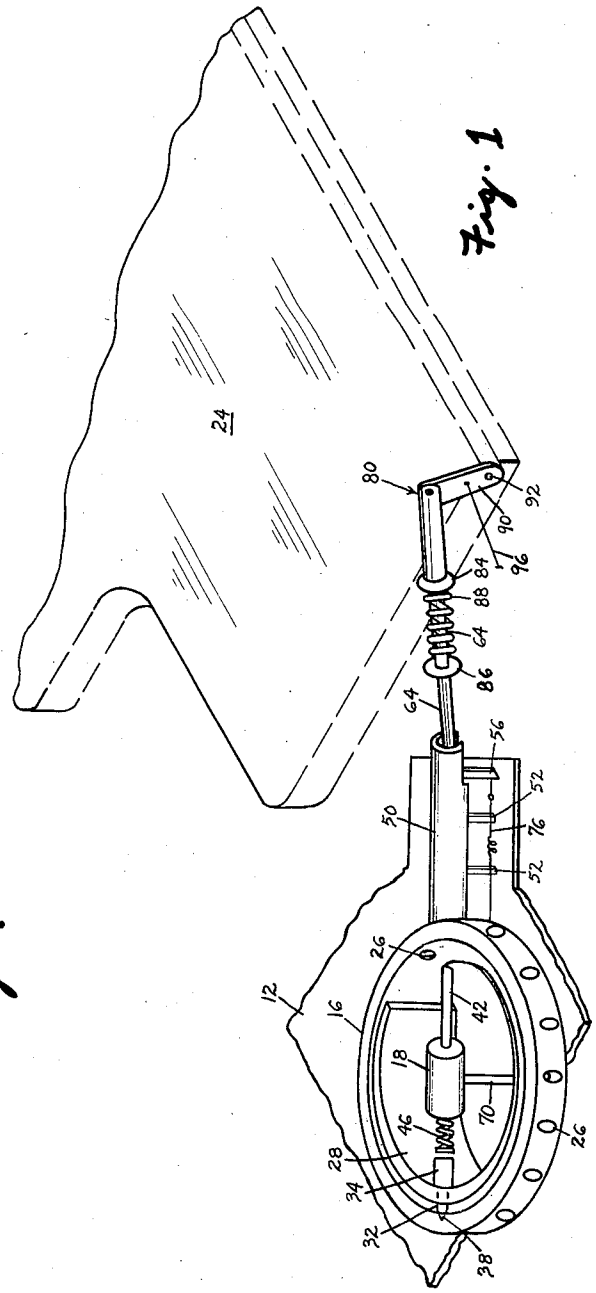

Fig. 1

INVENTOR
THOMAS MONGELLO

BY

R. S. Tompkins
ATTORNEYS

Sept. 3, 1957 T. MONGELLO 2,805,066

TARGET ELEVATING MECHANISM

Filed June 10, 1954 2 Sheets-Sheet 2

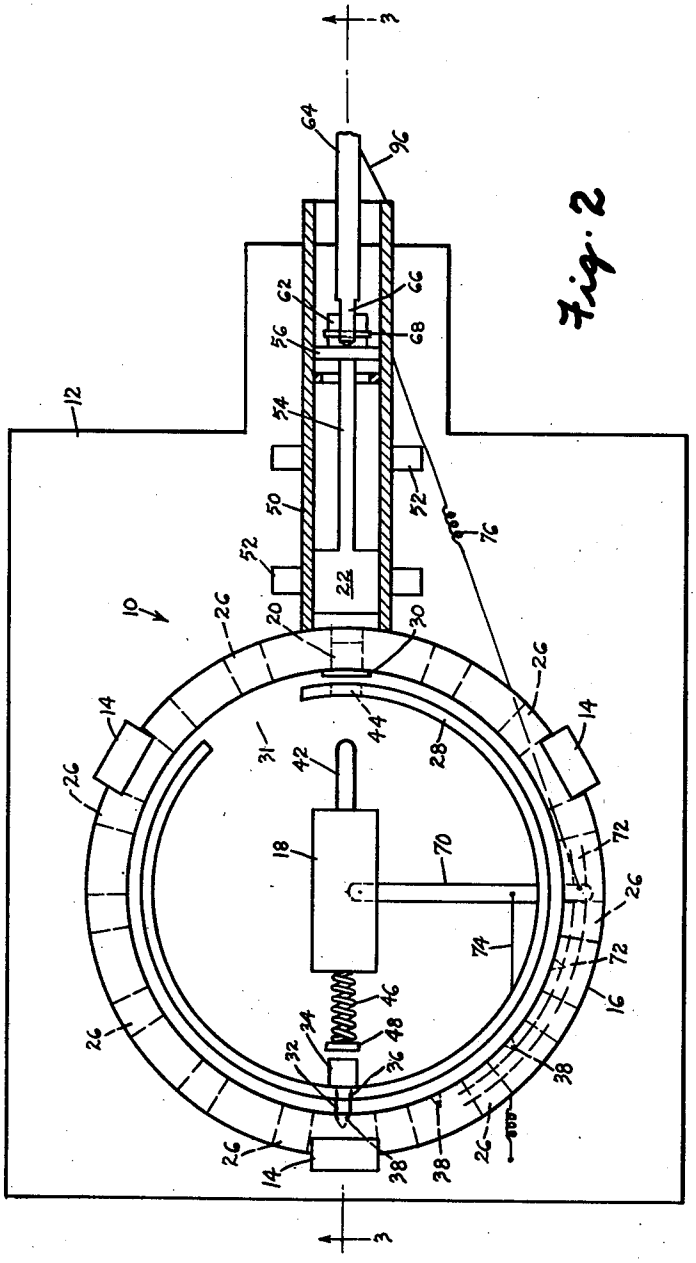

Fig. 2

INVENTOR
THOMAS MONGELLO

BY

R. I. Tompkins
ATTORNEYS

United States Patent Office

2,805,066

Patented Sept. 3, 1957

1

2,805,066

TARGET ELEVATING MECHANISM

Thomas Mongello, Levittown, N. Y., assignor to the United States of America as represented by the Secretary of the Navy

Application June 10, 1954, Serial No. 435,951

12 Claims. (Cl. 273—105.6)

(Granted under Title 35, U. S. Code (1952), sec. 266)

The invention described herein may be manufactured and used by or for the Government of the United States of America for governmental purposes without the payment of any royalties thereon or therefor.

The invention is designed to elevate a target without necessitating the use of an electrical or mechanical power line. A compact and powerful source of energy is provided to accomplish the desired result.

In accurate fire training, and particularly in military training, a target that becomes concealed upon being hit is used. It is desirable to raise these targets from a remote distance to minimize chances for accidental injury. Targets of this type are presently raised by cables connected to a target elevating lever. There is a practical limit to the distance which can separate the person operating the target cable and the target itself. For safety reasons, this distance must be as great as possible; for mechanical reasons, this distance cannot be too great, due to the impracticability of providing a long cable to be pulled. The target elevating mechanism of the invention overcomes these limitations and enables the target to be elevated while the operator is at a safe distance away.

The primary object of the invention is to provide a device capable of elevating a target by remote control.

Another important object of the invention is to provide a compact, but powerful source of energy to carry out simple mechanical operations.

Another important object of the invention is to provide a source of energy independent of any electrical or mechanical power line.

Yet another object of the invention is to provide a target that can be raised to the elevated position, held there despite its weight, and then released to enable it to assume a hidden position.

Still another object of the invention is to provide an explosive gas force to move a piston operatively connected to the target whereby movement of said piston will cause the target to be elevated into exposed position.

And still another object of the invention is to provide a magazine containing the source of energy and means to advance the magazine in step intervals to permit the target to be raised again after it has been struck by a projectile and thereby lowered.

A feature of the invention resides in the use of standard blank cartridges to provide the source of energy sufficiently powerful to enable the target to be elevated.

Another feature of the invention resides in the provision of a piston and link connection with the target to transmit the energy produced by firing of the target for elevation thereof into the exposed position.

Still another feature of the invention resides in the use of a latch engaging the piston to maintain the target in elevated position until a hit is scored, whereby the target lowers and thereby releases the latch to return the piston to the original position.

2

Other objects and may of the attendant advantages of this invention will be readily appreciated as the same becomes better understood by reference to the following detailed description when considered with the accompanying drawings wherein:

Fig. 1 is a perspective view of the target elevating mechanism with a portion of the target shown in silhouette,

Fig. 2 is a plan view of the device of the invention, and

Fig. 3 is a section taken on line 3—3 of Fig. 2.

Referring to the figures, the target elevating means is designated generally at **10** and is mounted on a base or platform **12**. Support posts **14** are provided in spaced apart relation and support a magazine **16** for step rotation. Posts **14** are illustrated 120 degrees apart, but it is obvious that any number, and arranged as is convenient, may be supplied. A solenoid **18** is adapted to fire a cartridge blank **20**, the escaping gases actuating a piston **22**, which piston provides the power to elevate target **24**.

Ammunition magazine ring **16** is circular in shape and is provided with chambers **26** in spaced relation to receive blank cartridges **20** therein. One satisfactory arrangement is to provide fifteen apertures or holes **26**, spaced apart at twenty-four degree intervals. Obviously, the total number of spaces to retain blank cartridges may be varied, as may be desired, without deviating from the inventive concept. After a round has been fired, causing target **24** to be elevated, ring **16** is advanced a single step, as will presently appear, to bring the next round into firing position. The expended blank thus has now been rotated to an ejection position for removal of the fired cartridge.

A cartridge retaining ring **28** is placed in close proximity to magazine ring **16** and is stationary. The retaining ring is spaced from magazine **16** sufficiently to provide a clearance space for the percussion cap **30** of a cartridge to project in the space provided. In this manner, cartridge **20** cannot fall out of the retaining chamber and is in position for firing. Ring **28** is cut away at **31** to provide a large space for ejection of the spent cartridges. Any preferred method of ejecting spent shells and reloading the magazine may be employed. In the manual system illustrated, after the fifteen rounds have been fired, the magazine is rotated manually and the spent blanks are removed. Fresh cartridges are inserted to take the place of the discarded blanks. If desired, a continuous ejection and replacement system may be employed. In such system, a lever could be linked to the falling motion of target **24** to eject the spent cartridge from the magazine with each step rotation after firing. At the same time, a fresh cartridge could be fed from a supply hopper into the next adjacent opening **26**, which had been cleared of the fired blank by the lever during the preceding step of rotation.

A positioning detent **32** is retained in housing **34** and extends through a hole **36** in ring **28**. Detent **32** extends into bore **38** in magazine **16** and is resiliently urged into position by means of spring **40**. The total number of bored holes **38** are equal to the cartridge holding spaces. Thus, as rotation of the cartridge magazine occurs after each round is fired, detent **32** enters the next successive bore and accurately positions the magazine so that the next blank to be fired will be in the correct position.

The cartridge is fired by remote control by means of solenoid **18**. Current is supplied to the solenoid. Solenoid **18** includes a movable stem **42** extending therethrough for sliding motion when the solenoid is energized. Stem **42** acts as the firing pin for the cartridge, and is so constructed that the forward, free end enters a slot **44**

in the stationary ring 28. Slot 44 is aligned with the specific cartridge containing holes 26 which have been moved into firing position. Stem 42 travels through slot 44 and strikes the percussion cap 30 of blank cartridge 20 to explode the shell and provide the energy required to raise the target. When solenoid 18 is de-energized, stem 42 is returned to its inoperative position by the action of spring 46 bearing against flange 48 on stem 42 and on the rear exterior surface of solenoid 18 (see Fig. 3).

The explosive gases produced act on piston 22, housed in cylinder 50. Cylinder 50 is stationary and is supported at 52. Cylinder 50 is in contacting proximity with magazine 16 at the point where the cartridge blank is fired. The energy of the explosion is transferred to cylinder 50 with a minimum of losses. There is no problem of gas lock on the return of piston 22, since air escapes between magazine 16 and cylinder housing 50.

Piston 22 includes the usual piston rod 54. Rod 54 is provided at its free forward end with a depending latch means 56. Latch 56 extends through an open section 58 in cylinder 50 and is adapted to engage a latch keeper 60 secured on platform 12. A pair of apertured ears 62 extend from the forward side of latch 56. Target rod 64 has a reduced rear portion 66, adapted to be received between the apertured ears 62 and is also apertured. A pivot pin 68 extends through the ears and the reduced portion of rod 64 and allows target rod 64 to be pivotally raised when piston 52 is actuated.

It is the movement of the piston under the force of the gases produced that enables magazine 16 to be advanced in step progression to move successive cartridge blanks into firing position. This is accomplished by means of a pawl 70 secured at the center of magazine ring 16, engaging ratchet wheel 72 mounted on said ring. Pawl return spring 74 constantly urges the pawl member into the inoperative position on the gear teeth of the ratchet wheel. When piston 22 moves forward, latch 56 also advances to elevate the target. At the same time, pawl 70 is moved forward by means of a stiff wire or cable 76 secured to the pawl and to latch 56 (see Figures 2 and 3).

Movement of piston 22 advances latch 56 beyond catch 60, thereby causing target rod 64 to move forwardly, and through pivot connection 68, to pivot in a clockwise or downward direction. Rod 64 is slidably received in passageway 78 of bell-crank lever 80. Arm 82 of lever 80 contains passageway 78 and is also provided with a peripheral flange 84. Flange 86 on rod 64 is provided to enable a compression spring 88 to be retained on said rod. Spring 88 is compressed during the forward movement of the piston and target rod to store energy. Return movement of latch 56 under the target load is prevented by keeper 60 and all of the energy contained in spring 88 is thus utilized to raise target 24. Lever arm 90 is fixed to target 24 at 92, and the downward motion of rod 64 causes the bell-crank lever 80 to rotate in a clockwise manner to raise the target into firing position.

When a hit is scored, a mechanism (which forms no part of this invention and is therefore not illustrated) causes target 24 to fall into the concealed position. Bell-crank lever 80 rotates in a counter-clockwise direction, causing piston 22 to return to its initial position. To permit this to take place, latch 56 must be released. Latch keeper 60 is normally urged into a nearly vertical position by means of spring 94. However, a heavy wire 96, such as piano wire, is attached to lever 80 and to the end of keeper 60 by means of a vertically extending pin 98 (see Fig. 3). Wire 96 is kept taut at all times with the target in the concealed position. The force of spring 94 is not sufficient to overcome the pull of wire 96 and keeper 60 is retained in a relatively horizontal position. With the forward thrust of piston 22, latch 56 is carried forward, causing lever 80 to pivot clockwise. Wire 96 also shifts clockwise enabling spring 94 to raise keeper 60 to a substantially vertical position by the pulling action of wire

96. By this time, latch 56 has passed beyond the keeper and return is prevented by contact with the keeper in its vertical position. With the target returned to a concealed position wire 96 again moves counter-clockwise and keeper 60 is again in a horizontal position. Wire 96 remains taut at all times.

The operation of the device is readily apparent from the above description. When the target is to be raised, solenoid 18 is energized in any convenient manner. While the solenoid disclosed has been found to be most convenient for operation, it is obvious that the inventive concept is not limited to such means. If the energy of the falling target is great enough to cock a spring loaded firing pin, the solenoid can be replaced by a trigger assembly. In such construction, the trigger is operated remotely by means of a pull wire.

Energization of the solenoid causes firing pin 42 to move forward and explode a cartridge blank retained in the chamber 26 that is aligned with the firing pin and with the piston housing 60. The gases produced force the piston forward in the chamber, moving latch 56 forward as well as target rod 64. If found necessary, an annular stop 100 may be provided in cylinder 50 to restrain continued movement of the piston. The energy produced in spring 88 is used to actuate bell crank lever 80 in a clockwise movement to elevate target 24. Return of piston 22 is prevented by engagement of latch 56 in locking means 60. Due to the cooperation of latch 56 with ratchet wheel 72, magazine ring 16 is rotated one position with the outward movement of the latch member. This brings the now spent cartridge into ejection position. Ejection may take place either manually or automatically. If done automatically, this step could be linked to the movement of the target to a concealed position after the hit has been scored. The device is thus automatically in position to elevate the target again.

The target elevating means of the invention now makes possible for the first time a remote control system which permits the target to be elevated at a considerable distance away. The source of energy is inexpensive and is independent of any electrical or mechanical power line, except for the small force required to release it. The cartridge blanks used are produced in a variety of sizes, shapes and energy capacity.

Obviously many modifications and variations of the present invention are possible in the light of the above teachings. It is therefore to be understood that within the scope of the appended claims the invention may be practiced otherwise than as specifically described.

What is claimed is:

1. A target elevating device comprising, an annular magazine ring having a plurality of uniformly spaced apertures, a plurality of cartridge blanks contained therein to provide the energy to elevate a target, power means adjacent said magazine ring and aligned with said cartridge blanks to actuate the target, link means including a spring operatively connected to said power means and to said target, and means exploding said cartridge blanks whereby said power means is actuated to elevate the target.

2. A target elevating device comprising, an annular magazine ring having a plurality of uniformly spaced apertures, a plurality of cartridge blanks contained therein to provide the energy to elevate a target, power means adjacent said magazine ring and aligned with said cartridge blanks to actuate the target, a target rod secured to said power means and retaining compression means thereon, a lever secured to said target rod and adapted to elevate a target, and means exploding said cartridge blanks whereby said power means is actuated to elevate the target.

3. A target elevating device comprising, an annular magazine ring having a plurality of uniformly spaced apertures, a plurality of cartridge blanks contained therein to provide the energy to elevate a target, a piston cylinder frictionally engaging the magazine ring, a piston slidable

in said cylinder, link means including a spring operatively connected to said piston means, and means exploding the cartridge blanks and actuating the piston to elevate the target.

4. A target elevating device comprising, an annular magazine ring having a plurality of uniformly spaced apertures, a plurality of cartridge blanks contained therein to provide the energy to elevate a target, a piston cylinder frictionally engaging the magazine ring, a piston slidable in said cylinder, a target rod secured to said piston and movable thereby, compression means on said target rod, a lever secured to said target rod and adapted to elevate a target, and means exploding the cartridge blanks and actuating the piston to elevate the target.

5. A target elevating device comprising, an annular magazine ring having a plurality of uniformly spaced apertures, a plurality of cartridge blanks contained therein to provide the energy to elevate a target, a piston cylinder contiguous with said magazine ring, a piston slidable in said cylinder, a latch secured to said piston and depending therefrom, link means operatively connected with said latch to elevate a target, a keeper, means connected to said link means and keeper, adapted to operate said keeper to releasably retain said latch when the target is in the elevated position, and means exploding the cartridge blanks and actuating the piston to elevate the target.

6. A target elevating device comprising, a magazine ring rotatively supported, a plurality of chambers uniformly spaced in said ring retaining blank cartridges therein, power means mounted adjacent one of said chambers, means engaging said magazine ring to align said chambers one at a time with said power means on rotation of the magazine ring, means connected to said power means to elevate a target, and means aligned with said magazine ring to fire said cartridges singly to provide the energy required to raise the target.

7. The combination of claim 6, wherein said aligning means comprises a stationary ring, a detent secured therein and extending towards said magazine ring, and apertures in said magazine ring adjacent each cartridge chamber to receive said detent on rotation of said magazine ring to help align the cartridge and the power means.

8. The combination of claim 7, wherein the stationary ring has an opening adjacent the power means to enable a spent cartridge to be ejected.

9. A target elevating device comprising in combination, a target, a magazine ring rotatively supported, a plurality of chambers spaced in said ring to receive blank cartridges, power means contiguous with one of said chambers, link means operatively connected with said target and said power means to elevate the target, locking means releasably retaining the target in elevated position, means connected to said device to rotate said magazine ring, and means to fire a cartridge to provide the energy whereby the target is elevated.

10. The combination of claim 9 wherein said last named means comprises a solenoid, and a firing pin extends from said solenoid and is adapted to strike the percussion cap of a cartridge retained in the magazine chamber.

11. The combination of claim 10, wherein a stationary ring including an aperture is positioned in closely spaced relation to said magazine ring, said aperture, firing pin, magazine ring chamber and power means being in axial alignment, and detent means on said stationary ring engaging said magazine ring to insure axial alignment.

12. The combination of claim 9 wherein said power means includes a piston, and said link means comprises a target rod pivotally secured to said piston and a lever having a passageway connected to said target, said target rod being slidably received in said passageway, the energy obtained by firing of the cartridge moving said piston forwardly to pivot the link means, whereby the target is elevated.

References Cited in the file of this patent

UNITED STATES PATENTS

809,796	Grabosch	Jan. 9, 1906
1,087,507	Palen	Feb. 17, 1914
1,657,931	Krantz	Jan. 31, 1928
1,865,988	Wiedeck	July 5, 1932
2,208,496	Coffman	July 16, 1940
2,652,781	Deardorff	Sept. 22, 1953