AIR CONDITIONING APPARATUS HAVING CONDENSATE DISPOSAL

Filed July 5, 1956 2 Sheets-Sheet 1

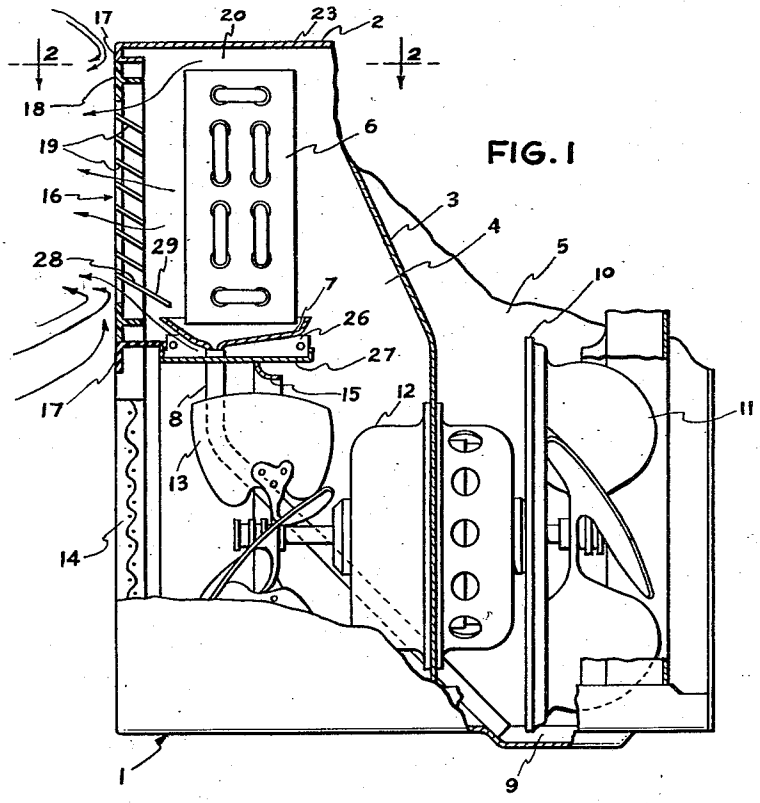

FIG. 1

FIG. 2

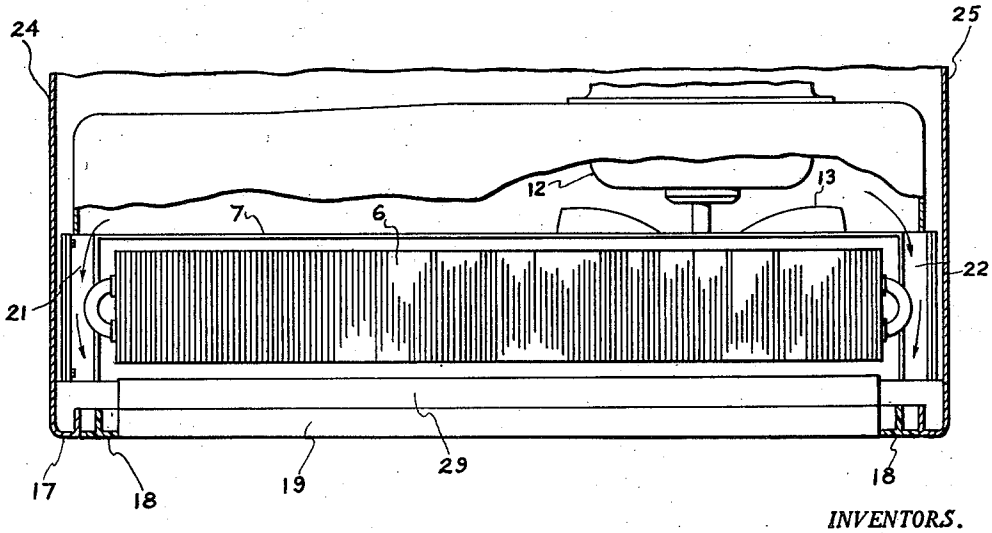

INVENTORS.
PAUL I. KOOIKER
& STANLEY E. ROSE
BY
THEIR ATTORNEY

AIR CONDITIONING APPARATUS HAVING CONDENSATE DISPOSAL

Filed July 5, 1956 2 Sheets-Sheet 2

FIG. 3

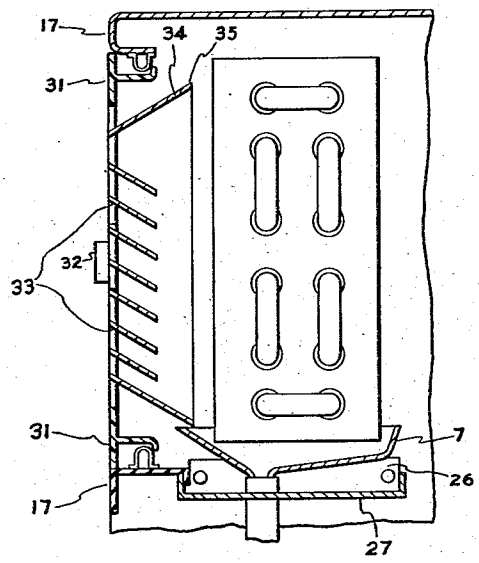

FIG. 4

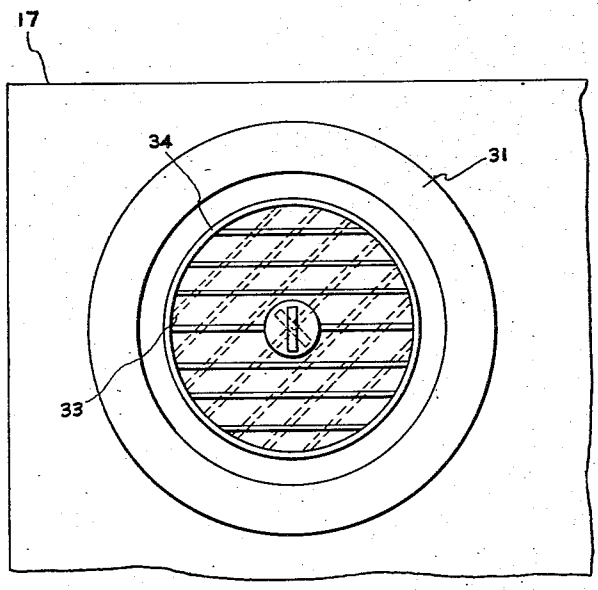

INVENTORS
PAUL I. KOOIKER
& STANLEY E. ROSE

BY
THEIR ATTORNEY

United States Patent Office

2,797,560

Patented July 2, 1957

1

2,797,560

AIR CONDITIONING APPARATUS HAVING CONDENSATE DISPOSAL

Paul I. Kooiker, Louisville, and Stanley E. Rose, Lyndon, Ky., assignors to General Electric Company, a corporation of New York

Application July 5, 1956, Serial No. 596,085

7 Claims. (Cl. 62—140)

This invention refers to air conditioning apparatus and more particularly to air conditioning apparatus having means for preventing condensation upon portions of the apparatus which are closely adjacent the evaporator or in the cold air stream, and for disposal of such condensate as does form on these portions.

In an air conditioning apparatus employed to condition the air within a room or enclosure, it is the normal practice to discharge the cold air stream through an opening having a grille which serves as a barrier against articles or fingers being placed through the discharge opening. Since the grille is in the cold air stream, it and its surrounding structure approach the temperature of the discharge air. The cold air is discharged at sufficient velocity to cause a lowering of pressure in the area adjacent the periphery of the air stream and causes an entrainment effect upon the warm, moist air adjacent the periphery of the cold air stream. The effect is such that warm, moist air is actually sucked back into the unit along the periphery of the discharge opening and wherever this entrained air touches a cold part, such as the grille casing or flange, moisture from this air condenses out. Entrainment usually occurs at the boundaries of the discharge air stream but can, and frequently does, also occur where there are obstacles directly in the discharge path, such as at the louvers of the grille. If means are not provided to prevent this effect or to dispose of the water which does happen to collect, then water will drip onto the floor of the room or enclosure.

Portions of the outer housing of the air conditioning unit which are closely adjacent the evaporator unit approach the temperature of the evaporator and become cold enough to cause condensation from the moisture-laden air within the room. If this is not prevented, condensate collecting on these surfaces will drip onto the floor of the room or upon furnishings placed directly underneath the air conditioner. Also the cold condensate from the evaporator collecting in the drip tray beneath the evaporator causes the bottom surface of the drip tray to become extremely cold and any of the warm air sucked back into the unit, due to the entrainment effect, deposits water if it comes into contact with this cold surface of the drip tray. Unless means are provided to prevent the formation of, or to dispose of, this water, it will drop onto the other areas of the unit and more than likely cause considerable damage.

Accordingly, it is an object of this invention to provide a new and improved arrangement for preventing the formation of condensation upon the surfaces which are in close proximity to the air stream discharging from the air conditioning unit.

It is another object of this invention to provide an air conditioning unit having an improved air discharge grille from which the moisture condensing on the grille surfaces is efficiently and quickly disposed of along with the moisture collecting on the evaporator.

More specifically it is the object of this invention to provide a sheath of warm air at the outer boundaries of the discharge grille to prevent these portions of the discharge

2

grille from coming into contact with the cold air passing through the evaporator and prevent these surfaces from becoming cold enough to cause condensation from the warm, moist room air which comes into contact with them.

It is a further object of this invention to provide a new and improved condensate collection means for the air conditioner evaporator which prevents the cold condensate from substantially cooling any of the portions of the surrounding unit in close proximity to the collected condensate or collection means.

Further objects and advantages of this invention will become apparent as the following description proceeds and the features of novelty which characterize the invention will be pointed out with particularity in the claims annexed to and forming a part of this specification.

In carrying out the objects of the present invention, there is provided in an air conditioning unit a plurality of passages for bypassing warm air from the blower around the evaporator to form a peripheral sheath of warm air around the cold air stream discharging from the evaporator, the peripheral sheath of warm air maintaining the periphery of the discharge grille sufficiently warm to prevent condensation thereon. In the preferred embodiment of the invention, the protective warm air layer below the evaporator is provided by a passageway between a pair of condensation collection trays positioned vertically below the evaporator and superimposed one above the other. The warm air flowing between the condensation collection trays also serves to insulate the bottom tray from the upper tray and to warm the bottom tray thereby preventing condensation upon the underneath surface of the bottom tray. As a further aspect of the invention, the grille is provided with a plurality of louvers, the lowermost of which extends beyond the inner or trailing edges of the upper louvers to catch any condensate dripping from the upper louvers and for delivering such condensate to the upper condensate collection tray.

For a better understanding of the invention, reference may be had to the accompanying drawings in which:

Fig. 1 is an elevation view of the air conditioning unit incorporating one form of the invention, the view being partially in section to disclose the details of the invention;

Fig. 2 is a partial plan view taken along line 2—2 of the air conditioning unit of Fig. 1;

Fig. 3 is a partial elevation view showing another embodiment of the invention; and

Fig. 4 is a front elevation view of the embodiment of the invention of Fig. 3.

Referring now to the drawings, in Fig. 1 there is shown a preferred embodiment of the invention in the form of a self-contained room air conditioner **1**. The conditioner includes a housing or casing **2** having a barrier **3** which divides the housing into two separate compartments which are designated the evaporator compartment **4** and the condenser compartment **5**. An evaporator **6** is positioned in the upper region of the evaporator compartment **4**, and by means well known in the art, is connected in refrigerant flow relationship with a condenser (not shown) and a compressor (not shown) located in the compressor compartment **5**.

An upper drip tray **7** is provided for catching condensate dripping from the evaporator **6**. In order to dispose of condensate collecting in the drip tray **7**, an insulated drain tube **8** is provided which transfers condensate to a sump **9** positioned in the condenser compartment. A slinger ring **10** upon the condenser fan **11** which is driven by a shaft from the motor **12**, picks up the condensate water from the sump **9** and throws it upwardly to the hot surface of the condenser (not shown) where it is vaporized and carried off in the air stream drawn into the

compartment and passed over the condenser for cooling purposes.

Mounted in the evaporator compartment **4** in the lower regions of the compartment and below the evaporator **6** is a propeller type fan or blower **13** which is also rotated by a shaft driven by the motor **12** supported in the barrier **3** dividing the housing into two compartments. Room air is drawn through the inlet grille **14** by the fan **13** and circulated through an orifice **15** designed to give smooth entry of air into the fan blades, and is then forced upwardly through the evaporator **6** to condition the air prior to its discharge into the room. As thus far described this air conditioner is not considered essential to the invention, insofar as structure is concerned, but is intended only to be illustrative of the type of air conditioner to which the invention may be adapted. As will now be explained the present invention deals with the prevention of condensate from forming upon structure which, due to its close proximity to the evaporator or its position in relation to the cold air stream, becomes excessively cold, and with means for disposal of condensate from the evaporator or from associated structure which due to the above conditions might collect condensate.

Conditioned air discharges from the evaporator compartment through a discharge grille, generally designated at **16**. As it discharges from the grille, the cold aiar stream causes an entrainment effect upon the room air surrounding the cold air stream. As indicated by the arrows in Fig. 1, this effect is such that the warm room air is actually sucked back toward the unit along the periphery of the discharge opening. In order to prevent condensation upon the vertical surfaces **17** surrounding the grille and upon the grille casing or flange **18** where the entrained room air comes into contact with these surfaces, the present invention provides means for preventing these surfaces from becoming excessively cold due to their proximity to the cold air stream and their association with the grille louvers **19**.

By the provision of air or shunting passageways through which a small amount of warm air from the blower can be bypassed around the evaporator **6** and discharged along the periphery of the cold air stream, the grille casing is maintained sufficiently warm to prevent condensation from occuring thereon. In order to provide this, the evaporator is spaced a short distance from the top of the housing **2** to form passage **20**, and similarly passages **21** and **22** are formed by spacing the evaporator a short distance from the sides of the housing **2**. Thus warm air flowing through passage **20** and discharging along the upper portion of the grille casing **18** warms that portion of the grille casing **18** sufficiently to prevent condensation and to prevent the lowering of the temperature of the supporting vertical surface **17** of the housing in this area. In a like manner, as can best be seen in Fig. 2, passages **21** and **22** shunt a portion of the warm air from the blower around the sides of the evaporator. This warm air is discharged along the sides of the cold air stream and prevent condensation upon the sides of the grille casing **18**. The quantity of warm air flowing through the shunting passages **20**, **21** and **22** is effective in keeping the side and top portions of the grille casing **18** and the surrounding vertical surface **17** above the condensation temperature, but is of insufficient quantity to materially alter performance of the air conditioner due to discharge of this warm air into the conditioned space along with the cold air from the evaporator. In addition to providing paths for the flow of warming air, the air passages **20**, **21** and **22** also space the evaporator from the casing and thereby insulate the housing surfaces **23**, **24** and **25** from the cold evaporator to further aid and maintain these surfaces sufficiently warm to prevent condensation from the warm room air in contact with these surfaces on the outside of the unit.

In order to supply a source of warm air to keep the grille casing bottom warm and thus prevent condensation thereon there is provided a shunting passage **26** between the drip tray **7** and a second or bottom drip tray **27** disposed vertically beneath the upper drip tray **7**. The second drip tray **27** actually performs two functions. First, since the cold condensate water collecting in the drip tray **7** from the evaporator **6** sometimes lowers the temperature of the drip tray **7** to such a point that any warm, moisture laden air coming into contact with the underneath surface of the drip tray **7** will leave a condensation upon this surface, the second drip tray **27**, prevents this condensate from falling into other portions of the evaporator compartment **4**. Secondly it forms the bottom wall of the shunting air passage **26** between the two trays through which the warm air from the blower **13** is bypassed around the evaporator to form the fourth side of a peripheral warm air sheath around the discharging cold air stream. The warm air flowing through passage **26** also serves to insulate the second drip tray **27** from the cold (upper) drip tray **7** and effects evaporation of any condensate that may have fallen into the second drip tray.

As can be seen in Fig. 1, the entrainment effect usually occurs at the boundaries of the discharge air stream but it can also occur where there are obstacles in the center of the discharge air path, such as where the louvers **19** cross the cold air stream. Room air sucked back into the louvers **19** in this manner deposits quantities of condensate upon these louvers. In order to dispose of the condensate forming upon the grille louvers **19** and prevent it from dripping into other areas of the evaporator compartment, the present invention provides for the louvers **19** to be arranged vertically one above the other and have downwardly slanting trailing or inner edges. The lowermost louver **28** has its inner edge **29** extending beyond the inner edges of the remaining louvers **19** to catch condensate dripping therefrom. The drip tray **7** for catching condensate dripping from the evaporator extends forwardly to a position directly below the edge **29** of the lowermost louver **28**. Thus any condensation collecting upon the grille louvers **19** will be caught by the lowermost louver **28** and thereby delivered to the drip tray **7** for disposal along with the condensate dripping from the evaporator.

Figs. 3 and 4 illustrate another embodiment of this aspect of the invention showing a grille and louver arrangement adapted for rotation to a plurality of positions in order to allow adjustment of the direction of flow of the cold air discharging through the grille. There is also provided a means for disposal of condensate which might form on the louvers regardless of the position of the grille. The grille casing **31**, is circular and may be rotated within its mounting structure simply by turning an adjustment knob **32** positioned in the center of the grille. Thus it is possible to obtain any desired adjustment of the grille casing **31** such as illustrated by that shown by the dotted lines of Fig. 4. A plurality of parallel louvers **33** are disposed across the grille casing **31**. In order to dispose of condensate forming upon these louvers, there is provided an outermost louver **34** having a generally cannular structure diverging toward its inner edge or portion **35** which extends beyond the inner edges of the remaining louvers **33**. As shown in Fig. 3 the louver **34** actually surrounds the remaining louvers **33** disposed across the grille casing **31**. The drip tray **7** extends horizontally to a position directly below the inner edge **35** of the outermost louver **34**. Thus any condensation from upon the grille louvers **33** will be caught by the outermost louver **34** and thereby delivered to the drip tray **7** for disposal along with condensate dripping from the evaporator.

By the present invention there has been provided an effective means for preventing the formation of condensate around the periphery of the grille and its adjacent supporting surfaces. It also provides a means for preventing or for removing condensate from the portions of the air conditioning unit upon which condensate might form due to the close proximity of these portions to the evapora-

tor or due to their position in relation to the cold air stream. By the above means the invention prevents the leakage of condensate into other parts of the air conditioning unit or into the conditioned room.

While there has been shown and described a specific embodiment of this invention it is to be understood that the invention is not limited to the particular form shown and described and it is intended by the appended claims to cover all modifications within the spirit and scope of the invention.

What we claim as new and desire to secure by Letters Patent of the United States is:

1. An air conditioning unit for conditioning a room comprising an evaporator, blower means for circulating warm air through said evaporator, an air discharge grille within said unit for discharging air passing through said evaporator, a first drip tray positioned vertically below said evaporator for catching condensate falling from said evaporator, and means for maintaining the bottom portion of said discharge grille relatively warm in relation to said air discharging from said evaporator, said means comprising a second drip tray positioned underneath and spaced from said first drip tray to form a passage between said first and second drip trays for bypassing warm air from said blower to said bottom portion of said grille whereby both said bottom portion of said grille and said second drip tray are maintained above condensate temperatures and whereby condensate falling into said second drip tray from the bottom of said first drip tray is vaporized.

2. An air conditioning unit for conditioning a room comprising a casing, an evaporator, blower means for circulating warm air through said evaporator, an air discharge grille within said casing for discharging air passing through said evaporator, means forming air passages within said casing around the top and sides of said evaporator, and a first drip tray positioned horizontally below said evaporator for catching condensate falling therefrom, a second drip tray positioned underneath said first drip tray and spaced therefrom to form a passage between said drip trays whereby said passages bypass warm air from said blower around said evaporator to form a peripheral sheath of warm air around said air stream discharging from said evaporator, said sheath of warm air maintaining the periphery of said discharge grille sufficiently warm to prevent condensation thereon.

3. An air conditioning unit comprising an evaporator, blower means for circulating air through said evaporator, an air discharge opening within said unit for discharging said circulated air from said evaporator, a grille member arranged within said air discharge opening, said grille member comprising a plurality of spaced louvers in vertical overlying relationship, the lowermost of said louvers arranged to extend beyond the inner edges of said remaining upper louvers so as to catch condensate falling therefrom, a first drip tray positioned vertically below said evaporator for catching condensate falling from said evaporator and a second drip tray positioned underneath said first drip tray for catching condensate falling from said first drip tray, said first drip tray extending to a position directly below said lowermost louver of said grille whereby said first drip tray catches condensate falling from said lowermost louver.

4. The air conditioning unit of claim 3 including a means for bypassing around said evaporator a stream of warm air from said blower to form a layer of warm air beneath the cold air stream from said evaporator to maintain the bottom surfaces of said discharge grille sufficiently warm to prevent condensation thereon, said means comprising a passage between said first and second drip trays for directing warm air from said blower to said bottom surfaces of said grille.

5. An air conditioning unit comprising an evaporator, blower means for blowing air through said evaporator, an air discharge opening within said unit for discharging said air from said evaporator, a grille member arranged within said air discharge opening, said grille member being rotatable in a plane normal to said discharge opening for directing flow of air through said discharge opening, said grille member comprising a plurality of spaced louvers in vertical overlying relationship, an outermost louver having a divergent, cannular shape with its inner edge extending beyond the inner edges of said remaining louvers, a first drip tray positioned vertically below said evaporator for catching condensate falling from said evaporator and a second drip tray positioned underneath said first drip tray for catching condensate falling from said first drip tray, said first drip tray extending to a position directly below said outermost louver of said grille whereby said first drip tray also catches condensate falling from said outermost louver.

6. An air conditioning unit for conditioning a room comprising, a housing, an evaporator, a blower means for blowing a stream of air across said evaporator, an air discharge opening within said unit for discharging air blown over said evaporator, means for bypassing warm air from said blower means around said evaporator, said means comprising passages formed between said evaporator and said housing whereby the portions of said housing adjacent said evaporator are maintained relatively warm in relation to said evaporator in order to prevent condensation from forming on the outside of said housing, a first drip tray positioned vertically below said evaporator for catching condensate falling therefrom, a second drip tray positioned underneath said first drip tray for catching condensate falling from said first drip tray and a passage between said drip trays for bypassing warm air from said blower between said first and second drip trays whereby said second drip tray is maintained relatively warm in relation to said first drip tray in order to prevent condensation from forming on the bottom of said second drip tray.

7. An air conditioning unit for conditioning a room comprising a housing, said housing having an air inlet opening positioned across the lower portion of one end of said housing, an air discharge opening positioned directly above said air inlet opening, an evaporator mounted within said housing adjacent to and upstream from said discharge opening, a blower means mounted within said housing downstream from said inlet opening for blowing a stream of warm air from within said room upwardly through said evaporator and blowing a stream of cold air out said discharge opening, a grille member arranged within said air discharge opening, said grille member comprising a plurality of spaced louvers in vertical overlying relationship, the lowermost of said louvers arranged to extend beyond the upstream edges of said remaining upper louvers so as to catch condensate falling from said upper louvers, a first drip tray positioned vertically below said evaporator for catching condensate falling therefrom, said first drip tray extending to a position directly below said lowermost louver of said grille whereby said first drip tray catches condensate falling from said lowermost louver, a second drip tray positioned underneath said first drip tray for catching condensate falling from said first drip tray and means for bypassing warm air from said blower means around said evaporator, said means comprising passages formed between said evaporator and said housing on three sides and a passage between said first and second drip trays on said fourth side whereby a peripheral sheath of warm air is formed around said cold air stream discharging from said evaporator to maintain the periphery of said grille member sufficiently warm that condensation is prevented from forming thereon.

References Cited in the file of this patent

UNITED STATES PATENTS

2,323,176	Ashley	June 29, 1943
2,740,268	Jones	Apr. 3, 1956