April 2, 1957 J. ANTOS ET AL 2,787,383

FULL CIRCLE BOOM CRANE

Filed March 13, 1951 6 Sheets-Sheet 1

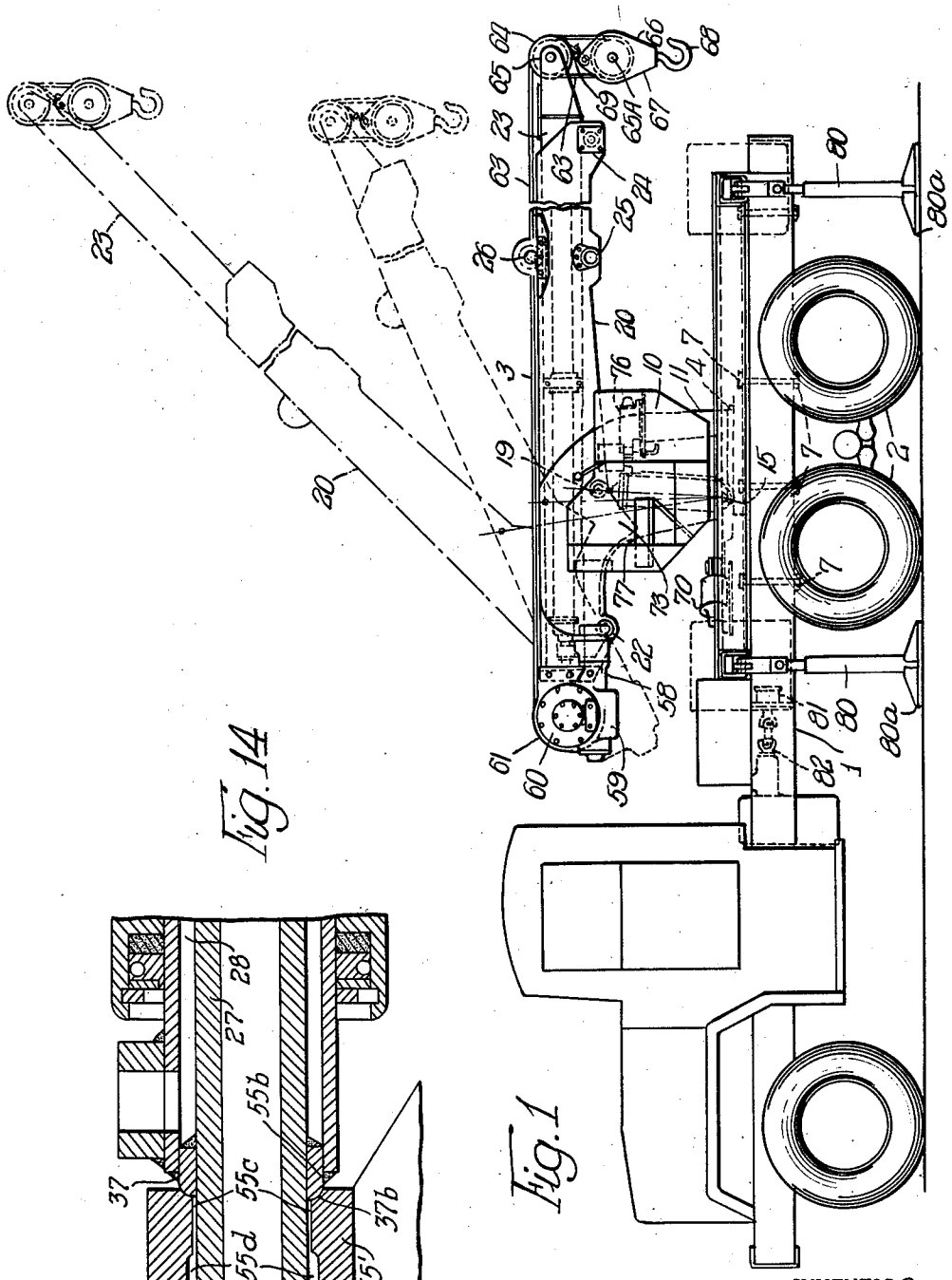

Fig. 14

Fig. 1

INVENTORS
Joseph Antos,
BY Edwin C. Brown,
Brown, Jackson, Boettcher & Dienner
Attys.

FULL CIRCLE BOOM CRANE

Filed March 13, 1951 6 Sheets-Sheet 2

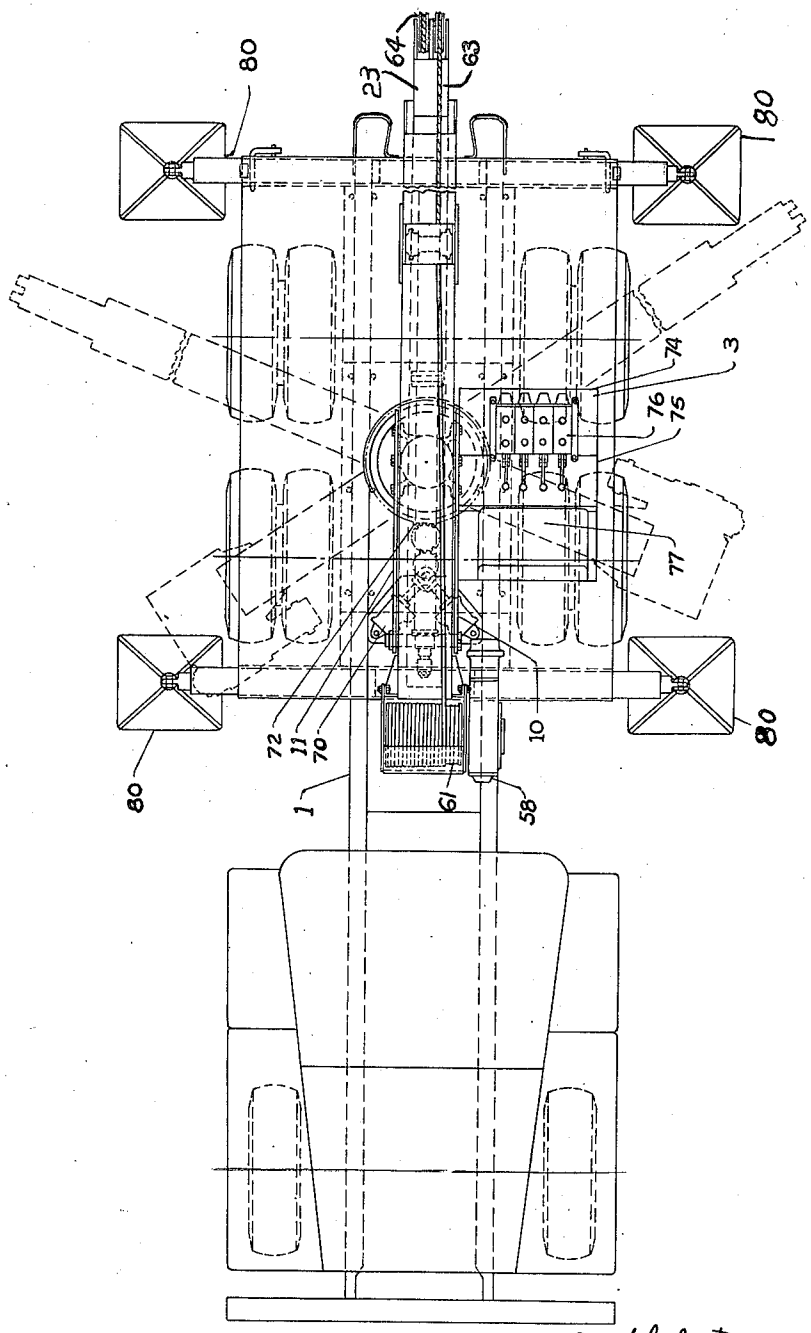

FIG. 2

Joseph Antos INVENTORS
Edwin C Brown
BY
James D Benbow

FULL CIRCLE BOOM CRANE

Filed March 13, 1951 6 Sheets-Sheet 3

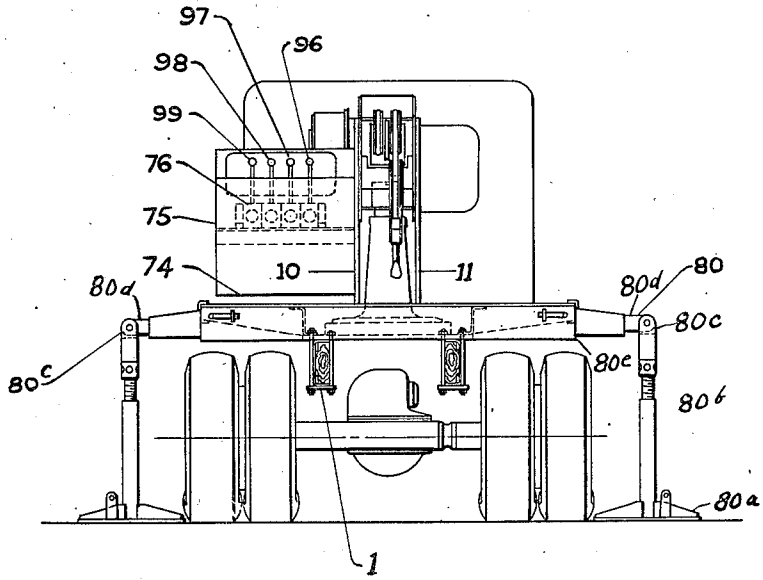

FIG. 3

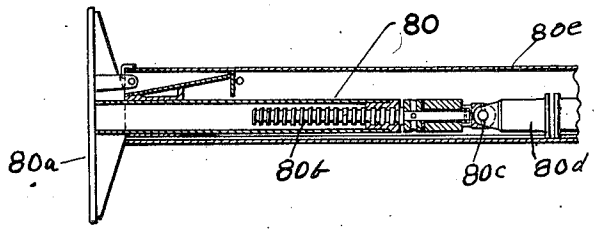

FIG. 4

INVENTORS
Joseph Antos
Edwin C Brown
BY James D Benbow

FULL CIRCLE BOOM CRANE

Filed March 13, 1951 6 Sheets-Sheet 4

Fig. 7

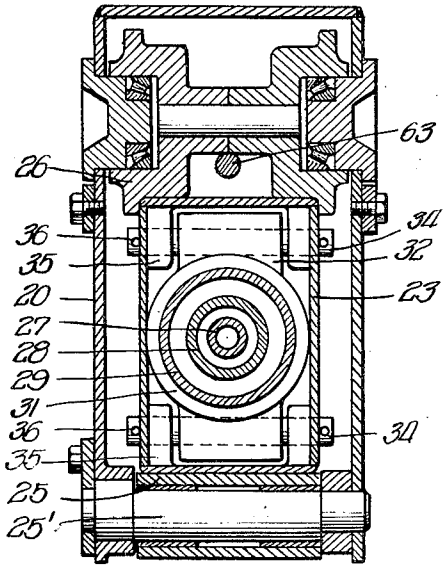

Fig. 8.

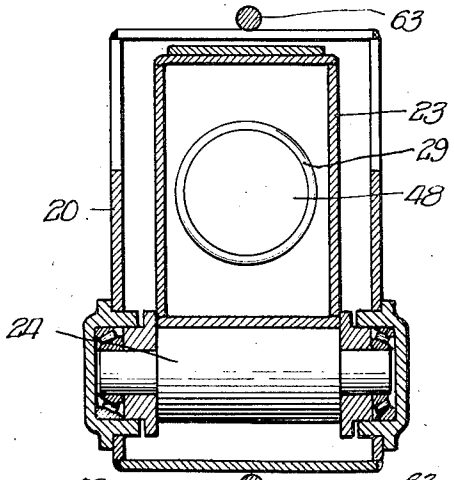

Fig. 12.

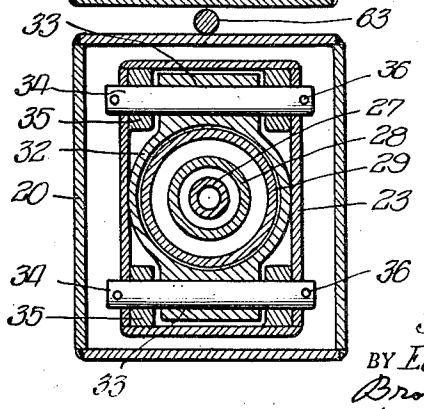

INVENTORS
Joseph Antos,
BY Edwin C. Brown,
Brown, Jackson,
Boettcher & Dienner
Attys

April 2, 1957 J. ANTOS ET AL 2,787,383

FULL CIRCLE BOOM CRANE

Filed March 13, 1951 6 Sheets-Sheet 5

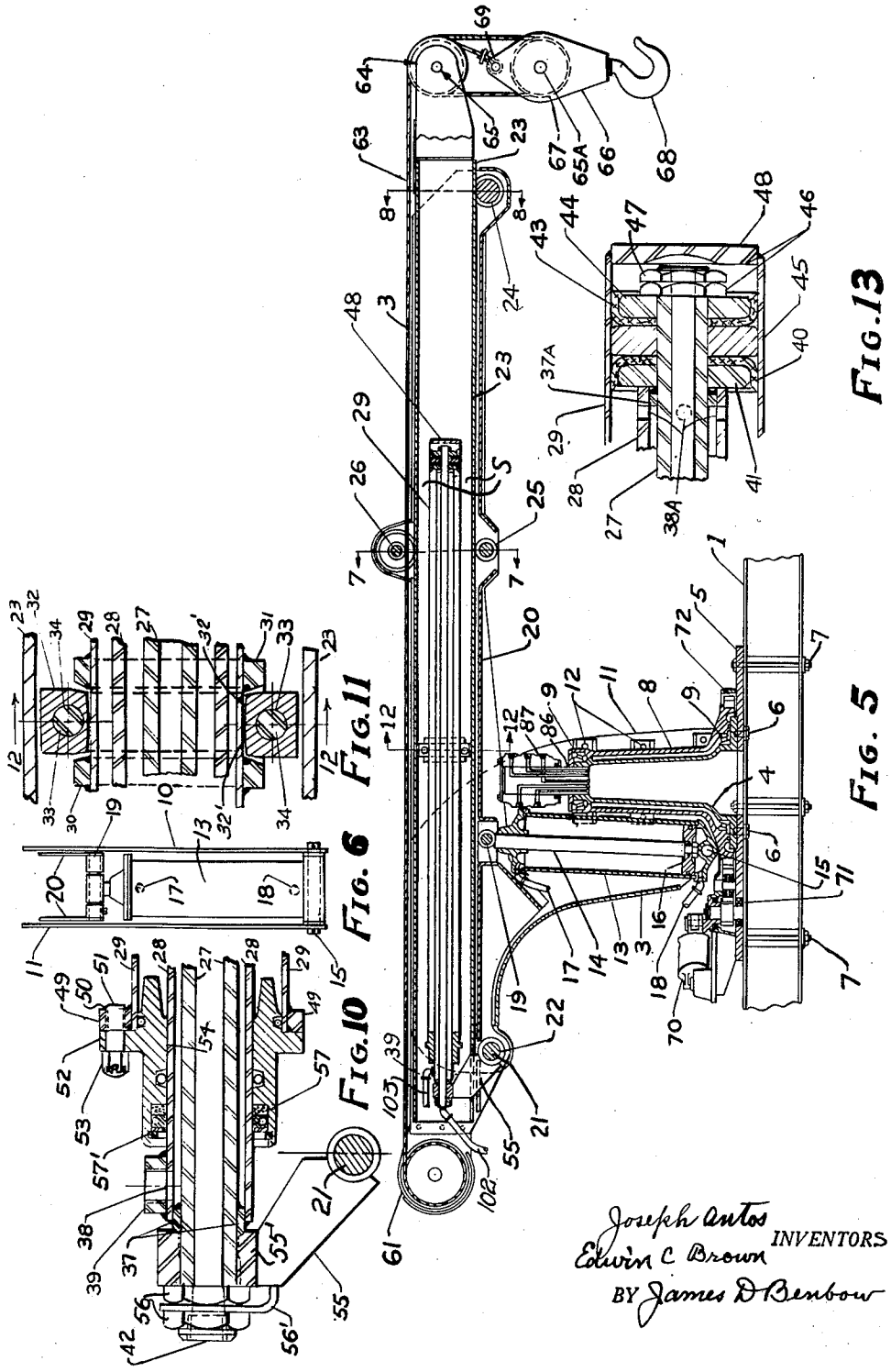

FIG. 13

FIG. 5

FIG. 11

FIG. 6

FIG. 10

Joseph Antos
Edwin C Brown INVENTORS
BY James D Benbow

FULL CIRCLE BOOM CRANE

Filed March 13, 1951 6 Sheets-Sheet 6

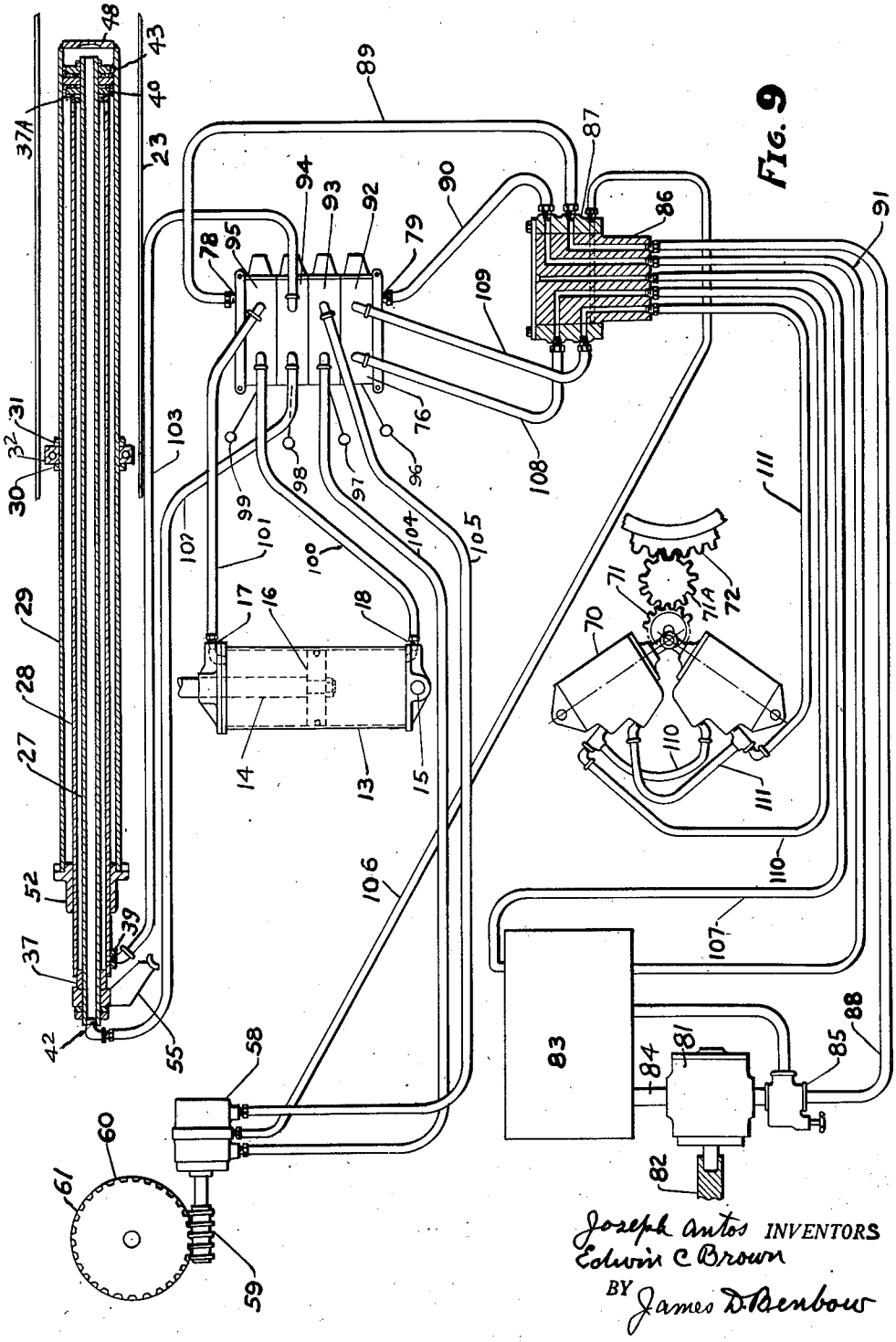

United States Patent Office

2,787,383

Patented Apr. 2, 1957

1

2,787,383

FULL CIRCLE BOOM CRANE

Joseph Antos and Edwin C. Brown, Aurora, Ill., assignors, by mesne assignments, to Baldwin-Lima-Hamilton Corporation, Philadelphia, Pa., a corporation of Pennsylvania

Application March 13, 1951, Serial No. 215,322

11 Claims. (Cl. 212—35)

This invention relates to improvements in a full circle boom crane capable of being attached to various types of tractors, automotive trucks, railroad cars or any fixed or movable support.

The present application embodies improvements upon the construction of full circle boom crane disclosed in Patent No. 2,462,926, issued March 1, 1949 to Fred D. Wilson, Joseph Antos and James D. Benbow.

The general object of our invention is to provide a full circle extensible boom crane having improved means to move the boom extension inwardly and outwardly; to raise and lower it to wind in or pay out a load supporting cable depending from the outer end of the boom extension, and to revolve the boom crane, the load through a portion of a full circle of revolution, or through one or more complete circles of revolution; and to perform said operations all at one time, or one operation at a time. The operator's station is shown as revolving with the boom crane, but it may have stationary mounting.

Another object of our invention is to provide improved hydraulically actuated mechanism for effecting a hydraulic extension and hydraulic retraction of the boom extension, and wherein this hydraulically actuated mechanism is embodied within the boom extension and boom support. This hydraulically actuated mechanism is further characterized by a stationary piston with packing on both sides of the piston and a movable cylinder connected to the boom extension to move the boom outward or inward to lengthen or shorten the over-all length of the boom as desired, by admitting the oil, steam or air under pressure into the cylinder to either side of the piston, whereby to exert pressure at either end of the cylinder to shorten or lengthen the boom as desired.

Another object of this invention is to use two tubes for the piston, having openings in said tubes to permit oil, steam or air to be admitted to either side of the piston packing to build up pressure on one side of the piston and release pressure on the other side of the piston, so as to move the cylinder attached to the boom extension in the direction desired and thus shorten or lengthen the boom.

Another object of the invention is to provide the above power extended and power retracted extensible boom with a load supporting cable which winds upon a power winch operated by a hydraulic motor located at the rear end of the boom support.

Another object of this invention is to provide improved control means adapted to control the raising or lowering of the cable, or to shorten or lengthen the cable during the movement of the boom extension, so that the cable hook will remain in a constant relation to the boom extension.

One preferred embodiment of our invention is illustrated in the accompanying drawings in which:

Fig. 1 is a side elevation of the full circle boom crane mounted on a truck, having outriggers with adjustable screw jacks, and showing the boom in a horizontal position, intermediate position and in a high position, with the boom extension partially extended in the high position and the cable hookup raised substantially to the boom extension.

2

Fig. 2 is a plan view of Fig. 1 showing the boom extension and boom support in three horizontal positions, and showing the location of the operator's seat and control valves.

Fig. 3 is the end view of Fig. 1 with the boom in the horizontal position, showing the vertical location of the control valves, and also showing the outriggers with the adjustable screw jacks in position.

Fig. 4 is a cross sectional horizontal view showing the position of the outrigger and adjustable screw jack, when the crane and truck are ready to be moved.

Fig. 5 is a longitudinal cross section of the boom crane showing the boom support and boom extension in a horizontal position.

Fig. 6 is a partial section showing the boom support, the boom raising and lowering cylinder and the plates and pins on which the cylinder and its piston are mounted.

Fig. 7 is a cross section taken on the plane of the line 7—7 of Figure 5, showing the boom support, boom extension and two of the roller means used to support the boom extension during its movement between extended and retracted positions.

Fig. 8 is a cross section taken on the plane of the line 8—8 of Figure 5 showing the boom support, boom extension and the outer boom support roller.

Fig. 9 is a diagrammatic view showing the hydraulic system used to raise, lower, and to move the boom extension inward and outward, and to wind in and pay out the load supporting cable, together with the hydraulic pump, oil tank, piping and control valves.

Fig. 10 is a fragmentary longitudinal section on a larger scale of the inner end of the boom extending and retracting cylinder and piston shown in Fig. 5.

Figure 11 is a fragmentary longitudinal section of the extensible boom and hydraulic ram on an enlarged scale, showing in greater detail the swivel connection therebetween which permits tilting between the boom extension and ram.

Figure 12 is a transverse sectional view taken on the plane of the line 12—12 of Figures 5 and 11.

Fig. 13 is an enlarged view of the outer end of the ram showing the piston cups and ram cylinders, and

Fig. 14 is an enlarged detail section of the pivotal connection between the anchor bracket and the inner end of the piston rod of the boom ram.

Referring to Figs. 1, 2 and 3, we have shown the rotatable hydraulic crane 3 having a stationary support 4 of conical or cylindrical shape mounted on the rear of truck 1 between the dual axles and wheels 2. Said conically-shaped support 4 is attached to a plate 5 by bolts or rivets 6 (shown in Figure 5), and plate 5 in turn is bolted to truck frame 1 by bolts 7.

A turntable member 8 of conical or cylindrical shape, to which the rotatable hydraulic crane 3 is attached, is supported for rotation by upper and lower roller bearings 9 mounted between the conical support 4 and the conical turntable member 8, see Fig. 5.

Vertical plates 10 and 11, one on each side of conical support member 8, are bolted thereto by bolts 12. See Figs. 1, 2, 3 and 5.

A vertical two way hydraulic cylinder 13 is supported at the bottom for oscillation about a horizontal pin 15 which in turn passes through the vertical plates 10 and 11.

Piston rod 14 carries a piston 16, and inlets 17 and 18 are provided at the top and bottom of cylinder 13 to permit oil, steam or air under pressure to raise and

lower the piston rod **14** and piston **16** as desired.

The upper end of the piston rod **14** is connected to a boom support **20** by a horizontal pin **19** to permit the raising and lowering of boom support **20** about a hinge pin **21** which extends through plates **10** and **11** to tiltably mount the boom support **20** at **22**, whereby the boom support **20** can be raised and lowered by the piston **16** and piston rod **14** (see Figs. 5 and 6). The boom support **20** is, for the major portion of its length, of substantially rectangular cross section.

The extensible boom **23**, made of plates rectangular in shape, telescopes almost its entire length into the rectangular boom support **20** and moves outwardly and inwardly thereof on lower rollers **24** and **25** carried by the boom support, being further guided by an upper inner roller **26** to prevent tilting of the inner end of boom extension **23** when the crane is lifting a load at the outer end of boom extension **23**, these rollers being supported by both sides of the boom support **20**, as shown in Figs. 5, 7 and 8. The roller **25** rotates on an eccentrically mounted journal pin **25'** (Figure 7), by the adjustable rotation of which the axis of the roller **25** can be adjusted upwardly or downwardly so that the boom extension **23** will have a snug rolling fit with the upper inner roller **26**.

Telescoping its entire length within the extensible boom **23** is the boom operating ram, which is made up of three tubes **27**, **28** and **29**, as shown in Figs. 5, 7 and 9–12. The inner tube **27** constitutes a tubular piston rod, the intermediate tube **28** constitutes a fluid conducting tube surrounding the piston rod, and the outer tube **29** constitutes the movable hydraulic cylinder for extending and retracting the boom extension **23**. As clearly shown in Figures 5 and 7, the upper and lower walls of the rectangularly shaped hollow boom extension **23** are substantially spaced from the hydraulic ram cylinder **29** so as to provide a vertical clearance space *s* therebetween. By virtue of this clearance space *s*, the outer end of the extended boom can have a considerable degree of downward flexure under heavy load, without causing any binding action on the hydraulic ram **27—29**. To this same end, the hydraulic ram **27—29** has a floating mounting in this clearance space *s* on two longitudinally spaced points of support, one of which is a pivot at the rear end of the tubular piston rod **27**, and the other of which is a thrust transmitting swivel located intermediate the ends of the ram cylinder **29**, the latter of which will now be described.

At the approximate center of the outside of tube **29** are welded two circular rings **30** and **31** and in between these circular rings **30** and **31** is a thrust transmitting yoke or swivel member **32** having holes **33** at the top and bottom for receiving top and bottom pins **34**. These pins **34** extend through member **32** and through bosses **35** carried by the vertical outside plates of the boom extension **23**, the projecting ends of these pins **34** receiving transverse retaining pins **36** (Figure 12). In this manner, the hydraulic cylinder tube **29**, the thrust transmitting member **32** and the boom extension **23** are caused to move together during the outward and inward movement of the hydraulic cylinder tube **29**. As shown in Figure 11, the bore in the yoke or swivel member **32** through which the ram cylinder **29** passes has a relatively loose fit over the cylinder to accommodate relative tilting motion between the yoke member and cylinder. For example, this bore in the yoke member tapers outwardly with an expanding taper **32'** in each direction from the transverse center line of the yoke member, thereby accommodating a substantial degree of vertical tilting motion of the ram cylinder **29** relatively to the yoke member **32**, so that downward deflection of the fully extended boom extension **23** under heavy load will cause no bending effect on the cylinder **29** and no binding action between the cylinder and piston. The location of the swivel yoke **32** substantially midway between the ends of the cylinder **29** is also an important feature because it places the point of swiveling substantially at the center of gravity of the cylinder, and thus reduces the downward or sagging load stresses acting on the cylinder and piston, particularly when the boom extension **23** is fully extended.

The inner tube **27** and intermediate tube **28** are connected together at the rear and front ends by welding circular separators **37** and **37A** to both tubes.

The intermediate tube **28** at its inner end has a hole **38** drilled at the top and a boss **39** welded thereto, drilled and tapped for a flexible hose connection **103** to permit the oil, steam or air under pressure to flow into the space between the intermediate tube **28** and inner tube **27**, and thence pass through holes **38A** at the forward end of intermediate tube **28** to exert pressure between the inner piston cup **40** and follower **41** and a closure head member **52** at the inner end of cylinder **29**, whereby to cause the boom extension **23** to move inwardly on the rollers **24**, **25** and **26**. The inner tube **27** is tapped at **42** at its inner end for a flexible hose connection **102** to permit oil, steam or air under pressure to flow through the tubular piston rod **27** to the forward end of the cylinder tube **29** and exert pressure between the outer piston cup **43** and follower **44** and a closure head **48** closing the outer end of the cylinder, whereby to cause the boom extension **23** to move outwardly on rollers **24**, **25** and **26**.

The piston cups **40** and **43** are separated by spacer **45** and are held together as one unit by two nuts **46** and **47** on the outer end of inner tube **27**. As above described, the forward end of the outer tube **29** has a circular closure head or cap **48** welded thereto to close this outer end of the cylinder.

At the inner end of the boom support **20** and mounted on pin **21** is an anchor bracket **55** having a circular ring portion **55'** to fit over the outer end of the tubular piston rod **27** to support and hold this tube **27** against endwise movement. As shown in Figure 14, the separator **37** which separates the rear ends of inner tube **27** and intermediate tube **28** is welded to both of these tubes, and formed at the rear end of said separator is a spherically shaped seating surface **37*b***. This surface **37*b*** seats in a matching spherically shaped socket **55*b*** which is formed in the front end of the bore **55*c*** of ring portion **55'**. Bore **55*c*** has a rather loose fit over the inner tube **27**; as, for example, by expanding the rear end of said bore outwardly into a counterbore **55*d***. Thus, relative tilting movement is permitted between the inner tube **27** and the anchor bracket ring portion **55'** around the axis of the spherical seating surfaces **37*b*** and **55*b***. The rear end of inner tube **27** is threaded for receiving two nuts **56** between which is confined a lock plate **56'**. This lock plate **56'** engages a flat surface on the end of the tube **27** and also engages the anchor bracket **55** or boom support **20**, so as to prevent the inner tube **27** from rotating axially. The nuts **56** are backed off from a tight fit against the end of ring portion **55'** so as to permit the above described tilting movement at the spherically shaped seating surfaces **37*b*** and **55*b***. From the foregoing, it will be seen that the boom ram **27—29** has a vertically swiveling floating mounting between the yoke member **32** supporting the cylinder **29**, and the spherical seating surfaces **37*b***, **55*b*** supporting the rear end of the piston rod tube **27**. Hence, the outer end of the extensible boom **23** can flex downwardly under heavy loads without causing resultant binding action in the hydraulic ram **27—29**.

The inner end of the outer cylinder tube **29** has a circular member or bolting flange **49** welded around the outside, this flange having a plurality of spaced holes **50** drilled and tapped for stud bolts **51**. Attached thereto is a rear cylinder head **52** comprising a closure member which is inserted inside of outer cylinder tube **29**, and which is held in position at the rear of the cylinder by nuts **53** on studs **51**. This rear cylinder head **52** has

an axial bore 54 having a sliding fit over the intermediate fluid conducting tube 28, and this bore is finished and provided with felt and leather wipers 57 held in place by spring retainers 57' to retain the oil, steam or air in the cylinder tube 29 during the movement of cylinder tube 29 and closure head 52 along the intermediate tube 28, during the operations of moving the cylinder 29 inwardly or outwardly to retract or extend the boom extension 23 to suit the conditions desired.

Attached to the outside rear portion of the boom support 20 is a vane type hydraulic reversible motor 58 which rotates a worm 59 that in turn rotates worm gear 60 in a self-locking drive (Figure 9). The latter is attached to a cable drum 61 which is mounted on the rear end 62 of the boom support 20, and to which cable drum is attached a cable 63.

At the forward end of boom extension 23 are mounted two or more cable sheaves 64 which rotate on pin 65. The cable 63 is reeved over the sheaves 64 and over a plurality of sheaves or pulleys 67 pivoted on pin 65A of a suspended sheave block 66, the latter carrying a swiveled cable hook 68. The end of the cable 63 is dead-ended to the sheave block 66 at 69, or to any other desired point of attachment.

Mounted on the plate 5 which carries the turntable member 8 is an oil, steam or air dual reciprocating engine 70 (Figure 9) which rotates the gear 71 and transmits a drive through intermediate gear 71A to a ring gear 72 attached to the outside circumference of the turntable member 8 to rotate the crane and all of its parts in either direction through a full circle or any part of a circle.

Attention is now directed to the diagrammatic view of the operator's control valve assembly 76 as shown in Figure 9, including the piping and other parts of the hydraulic system used in raising and lowering and extending and retracting the boom extension 23, operating the cable 63, and rotating the boom crane. A hydraulic pump 81 is mounted on the truck 1 and is driven from the power takeoff 82 of the truck 1. An oil reservoir tank 83 is mounted on the truck 1 and is connected to oil pump 81 by pipe 84. A pressure relief valve 85 is located between the oil pump 81 and a rotatable liquid distributing head 86—87 which is disposed coaxially of the axis of rotation of the turntable 8. The outer sleeve 87 of this liquid distributor is fastened between the plates 10 and 11 so as to rotate with the boom crane, and the inner core member 86 is attached to and remains stationary with the conical support 4 which is attached to the truck 1, as shown in Fig. 5.

Referring to Figs. 1, 2 and 3, the operator's station 73 is shown as being made up of two plates 74 and 75, which are attached to side plate 10 or adjacent portions of the rotatable turntable structure so that the operator's station revolves directly with the turntable and boom crane. Plate 74 (Figure 3) is formed in a U shape to form the back, floor and front of the operator's station and is attached to plate 10 by bolts, rivets or welding. Plate 75 forms the side of the operator's station and is attached to plate 74 by bolts, rivets or welding. The operator's seat 77 is attached to plates 74, 75 and 10. The operator's control valve assembly 76 is mounted on a support attached to plates 74, 75 and 10 directly in front of the operator's seat.

The oil pump 81 pumps the oil from oil tank 83 through pressure relief valve 85 and thence through line 88 to distributing core element 86. From this distributing core element 86 the oil is transmitted through distributing sleeve 87 and through line 89 to the inlet 78 of control valve assembly 76. When the oil pressure is released from control valve assembly 76, the oil flows through outlet 79 and through the return line 90 to distributor sleeve 87, and thence through distributor core 86 and return line 91 back to the oil tank 83.

The control valve assembly 76 consists of four valves 92, 93, 94 and 95 having control levers 96, 97, 98 and 99 which have three positions, viz: vertical which is neutral; push forward for one direction of operation; and pull backward for the opposite direction of operation.

The four valves 92, 93, 94 and 95 are bolted together and oil flows in a manifold space communicating with each valve and affording pressure at each valve, thereby permitting the operation of a single valve or any combination of valves at one time. Attention is directed to the aforementioned Patent 2,462,926 for the disclosure of certain details of the control valves 92—95 dual reciprocating engine 70 and other parts of the hydraulic system which we preferably employ in the present invention.

By pushing valve lever 99 forward, oil under pressure will flow from valve 95 through pipe or hose 100 to inlet 18 of the cylinder 13, thereby causing the piston 16 and piston rod 14 to move upwardly in cylinder 13 for transmitting upward thrust to the horizontal pin 19 so as to raise the boom support 20 and boom extension 23 about horizontal hinge pin 21.

Upon returning valve lever 99 to neutral or vertical position, the boom support 20 and boom extension 23 will remain in the raised position. By pulling backwardly on the valve lever 99 the oil under pressure will be caused to flow from valve 95 through pipe or hose 101 to inlet 17 of cylinder 13. This will cause the piston rod 14 and piston 16 to move downwardly and cause the oil on the underside of piston 16 to flow through connection 18 and pipe or hose 100 to the valve 95 and thence through connections 79, 90, 87, 86 and 91 back to the oil reservoir 83, thus permitting the boom support 20 and boom extension 23 to return to the horizontal position. If desired, the boom support 20 and boom extension 23 can be held in any intermediate position by returning valve handle 99 to the vertical or neutral position, which thus maintains equal pressures on both sides of the piston 16.

By pushing forwardly on valve lever 98 of valve 94, the oil under pressure will flow from valve 94 through pipe or hose 102 to the inner end of the tubular piston rod tube 27 and thence forwardly through the tube 27 to the cylinder space between the circular end cap 48 and the piston cup 43 and follower 44, thereby causing the cylinder tube 29 and boom extension 23 to move outwardly in the boom support 20 on rollers 24, 25 and 26. The outward movement of the boom extension 23 can be stopped at any point by returning the valve lever 98 to neutral position.

By pulling rearwardly on valve lever 98 of valve 94, the oil under pressure will flow through pipe or hose 103 to the inner end of intermediate fluid conducting tube 28 through hole 38 into the annular space between the inner tube 27 and intermediate tube 28. From this annular space the fluid will flow outwardly through the four holes 38A in the forward end of intermediate tube 28 into the cylinder space between intermediate tube 28 and outer tube 29 and thus apply pressure between the rear cylinder head 52 and the piston follower 41 and piston cup 40, whereby to cause inward movement of the boom extension 23. In each of these outward and inward movements of the boom extension 23, the oil in the discharging or non-pressure end of the cylinder 29 is returned to the oil reservoir 83.

By pushing or pulling movement of valve lever 98, the boom extension 23 can be quickly shifted to any desired position, and by placing the valve lever 98 in neutral position, the boom extension can be positively held in any such desired position.

The raising and lowering of the cable 63 and hook 68 is controlled by valve 93. By pulling rearwardly on valve lever 97 of valve 93, the oil under pressure will flow through pipe or hose 105 to the vane type motor 58 which rotates worm 59, worm gear 60 and cable drum 61 to raise the cable 63 and cable hook 68.

By pushing forwardly on valve lever **97**, the direction of the vane type motor **58** will be reversed, and cable **63** and cable hook **68** will be lowered. By putting the valve lever **97** in neutral position, the operator can hold the position of the cable **63** and cable hook **68**. The worm **59** and worm wheel **60** may be proportioned to form an irreversible drive, if desired. If a drain for the vane type motor **58** is desired, a separate line **106** will return the oil from the motor to distributing sleeve **87** and distributing core **86**, and thence through pipe or hose **107** to the oil tank **83**.

As shown in Figures 3 and 9, the boom extending and retracting control lever **98** and the cable winding and unwinding control lever **97** are disposed side by side, and have their handles arranged sufficiently close together so that both control lever handles may be covered by the span of one hand of the operator. Thus, when the operator desires to extend the extensible boom **23**, without the possibility of the suspended sheave block **66** or cable hook **68** becoming fouled in the head sheave **64**, he pushes forwardly on both control levers **97** and **98** simultaneously. The forward movement of the control lever **98** extends the boom extension **23**, and the forward movement of the control lever **97** pays out cable from the cable drum **61**, thus preventing the suspended sheave block **66** or cable hook **68** from being drawn up into position where it might become fouled in the head sheave **64**. This dual control through the two control levers **97** and **98** may also be employed to prevent the cable from elevating the load unduly relatively to the boom, in the operation of extending the boom. Conversely, when the operator desires to retract the extensible boom **23**, without causing the cable to lower the load unduly relatively to the boom, he pulls rearwardly on both control levers simultaneously. The rearward movement of the control lever **98** retracts the boom extension **23**, and the rearward movement of the control lever **97** winds up cable on the drum **61**, thus preventing the cable hook **68** from being lowered objectionably by the act of retracting the boom. By having the two control levers **97** and **98** disposed side by side, and sufficiently close together so that they can both be covered or grasped in the span of one hand of the operator, the operator can perform either of the above described dual operations of controlling the boom and controlling the cable solely through the use of one hand thus leaving the other hand free for performing other operations, such as for concurrently actuating the control lever **96** for swinging the turntable mounting or for concurrently actuating the control lever **99** for raising and lowering the boom.

To effect the horizontal rotation of the crane in either direction, and to hold it in any desired position, the valve **92** is provided. To rotate the crane to the right, a forward push on valve lever **96** of valve **92** will cause the oil under pressure to flow through pipe or hose **103** to distributing sleeve **87** and distributing core **86**, and thence through pipe or hose **110** to the dual reciprocating engine **70** in such direction as to rotate gear **71** and gear teeth **72** attached to the conical support **4** in the appropriate direction for rotating the crane to the right.

To rotate the crane to the left, a rearward pull on the lever **96** will cause the oil to flow under pressure through pipe or hose **109** to distributing sleeve **87** and distributing core **86**, and thence through pipe or hose **111** to the dual reciprocating engine **70**, so as to rotate gear **71** and gear teeth **72** attached to conical support in the appropriate direction for rotating the crane to the left. The crane can be held in any desired position by placing valve lever **96** in neutral position. In each of these operations of the dual reciprocating engine **70**, the non-pressure or discharge side of each cylinder returns the oil to the tank **83**, as fully disclosed in the above-mentioned Patent 2,462,926.

To give the vehicle greater lateral stability when the boom crane is swinging loads to one side or the other of the vehicle, we provide outriggers and adjustable jacks **80** at the four corners of the rear portion of the vehicle frame (Figures 2, 3 and 4). These outriggers and adjustable jacks comprise conventional base plates **80*a*** from which rise adjustable screw jacks **80*b*** that are pivotally connected at **80*c*** to slidable struts **80*d***. These struts are mounted for inward and outward sliding movement in transverse guide channels **80*e*** carried by or constituting part of the vehicle frame. In Figure 4 we have illustrated how these outrigger jacks can be swung upwardly and slid inwardly into retracted position in the guide channels **80*e***, where they are completely out of the way when the vehicle is travelling.

From the foregoing description it will be readily seen that we have produced an improved device that substantially fulfills the objects of the invention as set forth herein.

While this specification sets forth in detail the present and preferred construction of the device, still in practice such deviations therefrom may be resorted to as do not form a departure from the spirit of the invention, as defined by the appended claims.

Having thus described our invention, what we claim as new and useful and desire to secure by Letters Patent is:

1. In an extensible boom crane of the class described, the combination of a boom support, a tubular boom movably carried by said boom support for outward extending and inward retracting movement relatively thereto, a cylinder substantially enclosed within said tubular boom, swivel yoke means operatively connecting said cylinder with said boom to cause said boom to move endwise with said cylinder, while permitting relative swiveling movement between said cylinder and boom in a vertical plane, said swivel yoke means being located substantially midway between the ends of said cylinder so that said cylinder is substantially balanced fore and aft in its swiveled connection to said boom, piston apparatus in said cylinder comprising a piston rod having anchored attachment at its inner end to said boom support and having a piston head mounted on its outer end, and two fluid passageways associated with said piston apparatus and extending longitudinally of said piston rod, one passageway for introducing working fluid under pressure into the cylinder area on the front side of said piston head for extending the boom outwardly, and the other passageway for introducing working fluid under pressure into the cylinder area on the back side of said piston head for retracting the boom inwardly.

2. In an extensible boom crane, the combination of a boom support, an extensible hollow boom telescoping almost its entire length into said boom support, a hydraulic ram in said boom comprising a cylinder and piston operative to extend and retract said boom, said cylinder reciprocating directly with said boom in its extending and retracting movement, said cylinder and piston telescoping substantially entirely into said hollow boom when the latter is fully retracted, said piston comprising a piston rod and a piston head mounted on its outer end, two fluid passageways extending longitudinally of said piston rod, one passageway for introducing working fluid under pressure into the cylinder area on the front side of said piston head for extending the boom outwardly, the other passageway for introducing working fluid under pressure into the cylinder area on the back side of said piston head for retracting the boom inwardly, one of the walls of said boom being vertically spaced from said hydraulic ram to define a vertical clearance space therebetween which will permit downward flexure of the outer end of said boom under load without causing resultant binding action on said ram, an anchoring bracket pivotally anchoring the inner end of said piston rod to said boom support, and swivel yoke means operatively connecting said cylinder with said boom to cause said boom to move endwise with said cylinder,

while permitting relative swiveling movement between said cylinder and boom in the vertical plane of said clearance space, said swivel yoke means being located substantially midway between the ends of said cylinder so that said cylinder is substantially balanced fore and aft in its swiveled connection to said boom, said anchoring bracket and said swivel yoke means providing a floating mounting of said hydraulic ram in said vertical clearance space.

3. In an extensible boom crane, the combination of a boom support, an extensible hollow boom telescoping almost its entire length into said boom support, a hydraulic ram in said boom comprising a cylinder and piston operative to extend and retract said boom, said cylinder reciprocating directly with said boom in its extending and retracting movement, said cylinder and piston telescoping substantially entirely into said hollow boom when the latter is fully retracted, said piston comprising a piston rod and a piston head mounted on its outer end, two fluid passageways extending longitudinally of said piston rod, one passageway for introducing working fluid under pressure into the cylinder area on the front side of said piston head for extending the boom outwardly, the other passageway for introducing working fluid under pressure into the cylinder area on the back side of said piston head for retracting the boom inwardly, one of the walls of said boom being vertically spaced from said hydraulic ram to define a vertical clearance space therebetween which will permit downward flexure of the outer end of said boom under load without causing resultant binding action on said ram, an anchoring bracket pivotally anchoring the inner end of said piston rod to said boom support, and swivel yoke means operatively connecting said cylinder with said boom to cause said boom to move endwise with said cylinder, while permitting relative swiveling movement between said cylinder and boom in the vertical plane of said clearance space, said anchoring bracket and said swivel yoke means providing a floating mounting of said hydraulic ram in said vertical clearance space.

4. In an extensible boom crane, the combination of a boom support, an extensible hollow boom telescoping almost its entire length into said boom support, a hydraulic ram in said boom comprising a cylinder and piston operative to extend and retract said boom, said cylinder reciprocating directly with said boom in its extending and retracting movement, said cylinder and piston telescoping substantially entirely into said hollow boom when the latter is fully retracted, one of the walls of said boom being vertically spaced from said hydraulic ram to define a vertical clearance space therebetween which will permit downward flexure of the outer end of said boom under load without causing resultant binding action on said ram, an anchoring bracket pivotally anchoring the inner end of said piston rod to said boom support, and swivel yoke means operatively connecting said cylinder with said boom to cause said boom to move endwise with said cylinder, while permitting relative swiveling movement between said cylinder and boom in the vertical plane of said clearance space, said swivel yoke means being located substantially midway between the ends of said cylinder so that said cylinder is substantially balanced fore and aft in its swiveled connection to said boom, said anchoring bracket and said swivel yoke means providing a floating mounting of said hydraulic ram in said vertical clearance space.

5. In a device of the class described, a base frame, a crane frame mounted on the base frame for rotation thereon on a vertical axis, said frame having a bracket portion extending rearwardly relative to said axis, said bracket portion terminating in a pivot portion providing a pivot with a horizontal axis, a boom support mounted adjacent its rear end on said pivot and being swingable from a substantially horizontal position upwardly in a vertical plane, a boom extension telescopically mounted in the outer end of said boom support and provided at its outer end with a pulley for a cable, a double acting hydraulic cylinder connected between said boom support and said boom extension for extending and retracting the boom extension relative to the boom support, said double acting cylinder being disposed in said boom support and boom extension, said boom support and boom extension comprising telescopic tubular bodies of rectangular cross section, a cable winch and a hydraulic motor having a rotatable motor shaft for operating the winch mounted at the rear end of the boom support, a cable extending from the winch to the pulley and being guided and supported on the boom support between the winch and the pulley, and a double acting hydraulic cylinder disposed in approximately a vertical position under said boom support and connecting the boom support and said crane frame for swinging the boom support up and down in said vertical plane, a hydraulic motor for rotating the crane frame relative to the base frame, means for supplying hydraulic medium under pressure, and manually controllable valves for controlling the application of said medium to said cylinders and to said motors to produce motion in each of said motors and said cylinders in the forward or backward direction selectively.

6. The combination of claim 5 wherein said winch and its driving motor are mounted on the end of the boom support to the rear of said horizontal pivot, and substantially even with the top of the boom support whereby they do not substantially increase the clearance height of the boom support when the boom support is substantially horizontal.

7. The combination of claim 5 wherein the said vertical cylinder is disposed on the crane frame between the said vertical axis thereof and the horizontal pivot for the boom support.

8. The combination of claim 5 wherein the double acting extension actuating cylinder is connected at approximately its midpoint to the boom extension by a coupling allowing limited universal movement.

9. The combination of claim 5 wherein hydraulic medium under pressure is supplied to the winch operating motor and to the double acting cylinder in the boom support through separate control valves disposed adjacent to each other, and handles for said control valves disposed to permit operation of both said valves simultaneously by the operator.

10. The combination of claim 9 wherein the operation of both handles in one direction tends to admit pressure medium to the boom cylinder to extend the boom extension and to the winch motor to pay out cable, and operation of both handles in the opposite direction tends to admit pressure to the boom cylinder to retract the boom extension and to the winch motor to take up cable.

11. In a device of the class described, a boom support having a horizontal pivot adjacent its rear end for vertical swinging motion, and having a tubular body of rectangular cross section open at its front end, a boom extension having a tubular body of rectangular cross section open at its rear end telescoping inside said boom support, a double acting cylinder disposed inside the boom extension and connected thereto by a swiveling connection so as to avoid binding in the inward and outward travel with the boom extension, said cylinder having a piston and a piston rod connecting the piston to the rear end of the boom support, said piston rod having two longitudinal passageways therethrough for conducting hydraulic medium to and from each side of the piston, and hose connections communicating with said passageways at the end of the piston rod adjacent the horizontal pivot.

(References on following page)

References Cited in the file of this patent

UNITED STATES PATENTS

590,990	Kilgore	Oct. 5, 1897
697,686	Speer	Apr. 15, 1902
951,433	Carey	Mar. 8, 1910
990,770	Petersen	Apr. 25, 1911
1,603,573	Baker	Oct. 19, 1926
1,782,406	Bureau	Nov. 25, 1930
2,010,496	Peters et al.	Aug. 6, 1935
2,075,819	Manly	Apr. 6, 1937

2,196,649	Waite	Apr. 9, 1940
2,365,167	Billings	Dec. 19, 1944
2,375,264	Wagner et al.	May 8, 1945
2,381,731	Erdahl	Aug. 7, 1945
2,402,848	Senn	June 25, 1946
2,428,163	Hubbard et al.	Sept. 30, 1947
2,462,926	Wilson et al.	Mar. 1, 1949
2,475,963	Howell	July 12, 1949
2,517,813	Wallace	Aug. 8, 1950
2,684,159	Oldenkamp	July 20, 1954