March 12, 1957 J. R. YOUNG 2,784,782

SCREEN FRAMING ARRANGEMENT

Filed Aug. 24, 1953

FIG. 1.

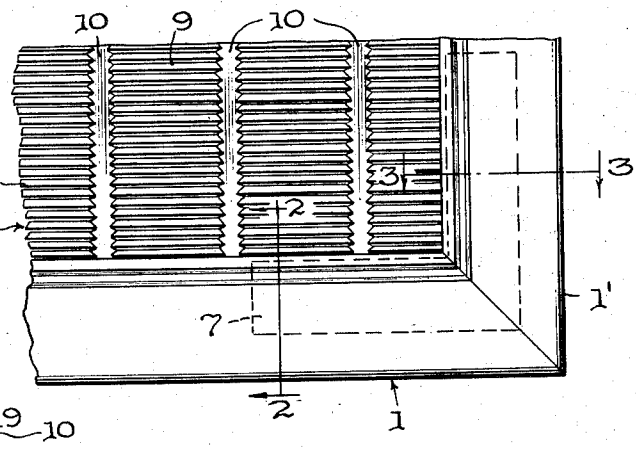

FIG. 2.

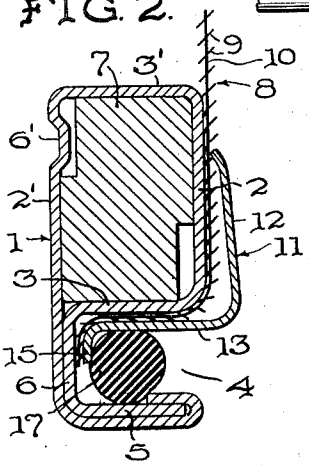

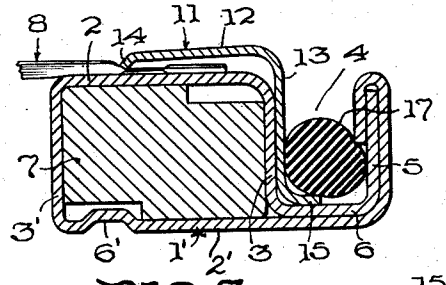

FIG. 3.

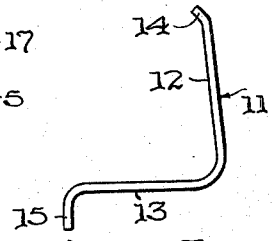

FIG. 3a.

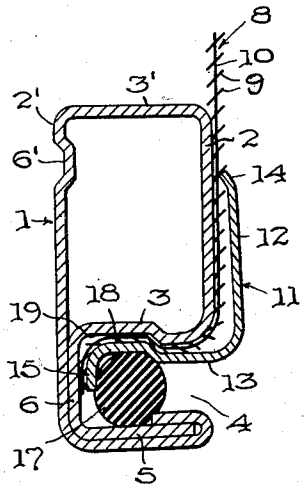

FIG. 4.

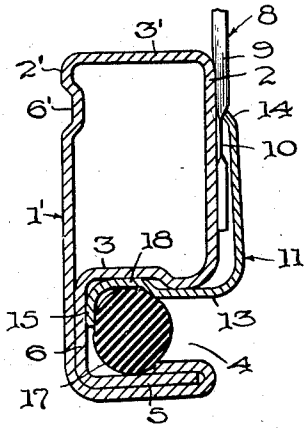

FIG. 5.

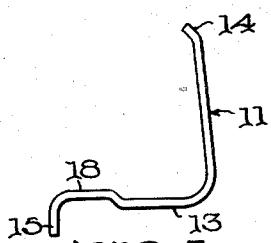

FIG. 5a.

INVENTOR.
JOHN R. YOUNG
BY James E. Toomey
ATTORNEY

United States Patent Office

2,784,782

Patented Mar. 12, 1957

1

2,784,782

SCREEN FRAMING ARRANGEMENT

John R. Young, Lincolnwood, Ill., assignor to Kaiser Aluminum & Chemical Corporation, Oakland, Calif., a corporation of Delaware

Application August 24, 1953, Serial No. 375,934

4 Claims. (Cl. 160—395)

This invention relates to screen frame structures. More particularly, it is concerned with providing a novel arrangement for tensioning and effectively securing the several marginal edges of louver type screen against their respective framing members.

Various difficulties have been experienced in the past in properly framing, particularly within a metal frame, louver type screen such as that disclosed in the patent to Harold Warp, No. 2,366,224, issued January 2, 1945, which do not exist in framing arrangements for ordinary woven wire screen.

Because of the particular structure of louvered type screen, it is more difficult to grip the screen with conventional frame locking elements than ordinary woven wire screen cloth. As a result, it is usually not possible to obtain proper tensioning of the screen against and anchoring of the screen to a metal frame member, while using conventional metal framing arrangements.

Unlike woven wire screen, louvered type screen, because of its peculiar construction, is inherently rigid and stiff. Consequently, it offers greater resistance to tensioning and bending than woven wire screen. Special locking or anchoring means are necessary therefore for exerting the proper amount of tension on the screen at its point of engagement with a frame member so as to properly lock and stretch the screen, not only between the top and bottom frame members, but also between the side or edge frame members without damaging or distorting the screen louvers.

Various framing arrangements have been proposed in the past for accomplishing this result, but these have not proven completely satisfactory for one or more reasons. Certain of these framing arrangements required that the screen frame as well as the various elements for anchoring the screen to the frame be made in a special manner. This in turn necessitated the use of expensive and special manufacturing tools as well as skill in assembling the locking means and the frame together. In addition, these framing arrangements involved elements which had such a special construction and configuration that close tolerances in the finished elements were required in order that a tight fit and suitable lock could be had between the louvered screen, the screen locking members, and the frame. All of the above factors increased the cost of the proposed framing arrangements and discouraged commercial exploitation of the same.

With the particular framing arrangement provided by the instant invention, however, louvered type screen may be framed in an efficient and satisfactory manner with the speed comparable to that of conventional woven wire screen and at a comparable cost.

Accordingly, it is among the primary objects of this invention to provide a novel, yet simple arrangement for mounting louvered screen within frame, whereby the screen will be effectively tensioned between the top and bottom frame members, and securely locked to the side frame members.

It is another object of this invention to provide a novel arrangement for attaching a marginal edge of a louvered type screen to a metal frame wherein in addition to locking the marginal edge of the screen with the open spline receiving channel of the frame member, tension is also induced on the screen body inwardly of and adjacent the open channel portion of the frame member.

2

A further object of this invention is to provide a novel framing arrangement for anchoring louvered type screen to frame members wherein the marginal edges of the screen will be effectively secured to the frame members, and without distortion of the screen louvers.

Another object of this invention is to provide novel means for securing the marginal edges of louver type screen to a frame, which involves a minimum amount of simply and easily fabricated locking members.

A further object of this invention is to provide novel spline means for securing louvered type screen to a frame wherein the relatively fragile screen will be protected from accidental damage, by spline seating tools, during the installation of the spline means.

Another object of this invention is to provide a novel framing arrangement for anchoring louvered type screen within a metal frame wherein similar anchoring means are used for securing the marginal edges of the screen both to the top and bottom frame members as well as the side frame members.

A further object of this invention is to provide novel spline means for securing louvered type screen to a metal frame which includes a novel resilient and deformable spline member for exerting tension upon the screen inwardly of the open spline receiving channel portion of the frame.

These and other objects are accomplished by providing in a screen framing construction the combination of a frame provided with a bearing surface of substantial area located adjacent the inner periphery of the frame and a spline receiving open channel portion located adjacent the outer periphery of the frame. The screen which is secured to the frame is provided with rows of parallel slats joined together by tension means. A marginal edge of the screen covers the bearing surface of the frame. Anchoring means employed to secure the screen to the frame includes a primary spline member and a secondary spline member. The primary spline member is roughly Z-shaped. It is provided with a pair of fingers or arms disposed at an angle to one another. One of these fingers or arms is capable of being deformed and is adapted to contact the screen at a point where the screen covers the bearing surface of the frame. The other finger of the primary spline member is disposed within the open channel portion of the frame. A secondary spline member, preferably of resilient deformable material, is also disposed within the open channel portion of the frame. This secondary spline member is adapted to frictionally engage the last mentioned finger of the primary spline member so as to secure the primary spline member as well as the screen to the frame, while simultaneously tensioning the deformable finger of the primary spline element against the screen at a point where the screen contacts the bearing surface of the frame.

Other objects and advantages of the instant invention will become more apparent from a consideration of the following detailed description when taken in conjunction with the appended drawings, wherein:

Figure 1 represents a broken fragmentary front elevational view of a corner of a louvered screen and frame assembly as it would normally appear when viewed from the outside of a building;

Figure 2 is a sectional view of the screen frame assembly shown in Figure 1, when taken along lines 2—2 thereof;

Figure 3 is a sectional view of the screen and frame assembly shown in Figure 1, when taken along lines 3—3 thereof;

Figure 3*a* is an end view of one of the spline elements used for securing the screen to the frame members shown in Figures 2 and 3;

Figure 4 shows a modified form for the framing arrangement disclosed in Figure 2;

Figure 5 shows a modified form for the framing arrangement disclosed in Figure 3, with the framing members being shown in a different position from that of Figure 3;

Figure 5*a* discloses a modified type of spline member, which would be used with the framing arrangements disclosed in Figures 4 and 5.

In the preferred embodiment of the invention, the screen framing arrangement proposed contemplates the use of end and side frame members **1** and **1'** which will be provided on the inner periphery thereof, i. e., the part of a frame member which is closest to the main section or body of the screen, with a wall or bearing surface **2** of substantial area. If desired, this bearing surface may be formed as part of a roughly rectangular in cross-section inner screen frame portion, comprised of parallel side walls **2** and **2'**, and end walls **3** and **3'**.

Wall **3** also serves as the inner wall for the open spline receiving channel **4** located on what may be termed the outer periphery of the frame, i. e., the portion of the frame which is furthest removed from the main body of the screen. Wall **5** constitutes the outer wall for channel **4** and walls **3** and **5** are connected by the web **6**.

Although it is possible to use an extruded frame section and still obtain the advantages of the instant invention, the preferred embodiment of the invention contemplates that the end and side frame sections **1** and **1'** be roll formed from a suitable piece of metal such as aluminum.

At the same time that the frame sections **1** and **1'** are roll formed, walls **2'** may be advantageously provided with an indented or recessed portion **6'** by means of which the relatively wide wall **2'** will be additionally reinforced and stiffened.

It will also be observed by referring to Figures 2 and 3 that the same type of frame member may be employed for both the end as well as the side framing elements. Each of the end and side frame members **1** and **1'** is mitered at its corners so that they may be joined together. For this purpose, it is contemplated also that an L-shaped miter bar **7** or the like be employed. This fits within the hollow portion of the frame members formed by walls **2** and **2'**, **3** and **3'**.

Once the top and bottom frame members or end members **1** as well as the side frame members **1'** have been joined together, the louvered type screen **8** comprised of the slats **9**, and the tension strips **10**, which run parallel to the side frame members, is then emplaced on the inward side of the several frame members, i. e., the sides of the several frame members, which will be located on the inside of the building. In the preferred embodiment of the invention, slats **9** and tension strips **10** are formed integrally with each other. At this time, in the case of the top and bottom frame members **1**, the top and bottom marginal edges of the screen will not only overlap the large bearing surface **2** of the top and bottom frame members, but in addition, portions of these marginal edges of the screen adjacent this bearing surface will also be disposed within the open channel portion **4** of the frame members as indicated in Figures 1 and 2.

In the case, however, of the side frame members **1'**, as indicated in Figure 3, the side edges of the screen are not pressed into the spline receiving groove **4**. Instead these side edges merely bear against and overlap the large bearing surface **2** of the rectangular in cross-section inner portion of the frame **1'**. The reason why it is not normally desirable to press the side marginal edges of the screen into the open channel portion **4**, is because by so doing, one would be acting transversely of the longitudinal axis of the rows of slats **9** in the screen. This in turn would cause a bending of the slats out of their normal plane and a distortion of the same.

For the purposes of locking in an efficient manner as well as tensioning and stiffening the louvered screen **8** against the several frame elements **1** and **1'**, a novel metallic spline element **11** of the proper temper and gauge is employed. This spline element **11**, which may be referred to as a primary spline element, is roughly Z-shaped in cross-section and is provided with a pair of resilient fingers **12** and **13**. The free end of finger **12** terminates in an inwardly crimped portion **14**, while the free end of finger **13** terminates in a lip portion **15** located at a transverse angle thereto. It will also be noted that the two fingers **12** and **13** project away from one another at an acute angle which is preferably slightly less than 90°. The importance of this feature will be discussed in greater detail hereinafter.

When spline member **11** is emplaced within the open channel portion **4** of a frame member **1** or **1'**, i. e., with the finger **13** thereof being located in the open channel portion **4**, the finger **12** will overlap the louvered screen **8**. As a result, the crimped portion **14** on finger **12** will contact the screen **8** at a point which is spaced from the open channel portion **4** and where the screen overlaps the large bearing surface **2** in the case of both the top and bottom frame members, as well as the side frame members **1'**. At this time also, the lip **15** of the finger **13** will be located adjacent the web portion **6** disposed between the inner and outer walls **3** and **5**, defining the open channel portion **4** of a frame member **1** or **1'**. Spline members **11** are also preferably mitered at their ends.

For the purposes of anchoring the primary spline member **11** within the open channel portion and in turn the screen **8** to the frame members **1** or **1'**, a secondary spline member **17** is also employed. This secondary spline member is preferably made of a resilient material, so that, when it is emplaced in the open channel portion **4** of the frame and is wedged in between the finger **13** of the primary spline member **11** and the outer wall **5** of the open channel portion **4**, in the manner shown in Figures 2–5 it may be deformed and serve to lock the primary spline member **11** to the frame as well as against the screen **8**. The locking of spline member **11** to the frame members **1** or **1'** will in turn cause a locking of the screen to the frame members.

It is also to be noted that finger **12** of spline member **11**, since it covers the screen adjacent the open channel portion **4**, advantageously serves to protect the screen **8** against accidental damage from the tools used to seat the secondary spline member **17** in the open channel portion **4**.

In the case of the top and bottom frame members, both of the fingers **12** and **13** as well as the lip portion **15** of the primary spline member will be in direct contact with and apply locking pressure to the screen **8**. In the case of the side frame members **1'**, only finger **12** of the spline member will have such a function.

It will now be observed therefore that at the time that the secondary spline members **17** are emplaced, that the primary spline members **11** as well as the screen **8**, will be secured to the several frame members **1** and **1'**. It will also be observed at this time, that the forming of the primary spline member **11** in such a way that the fingers **12** and **13** are located at an acute angle to one another becomes extremely important. The reason for this is the fact that as the fingers **13** of primary spline members **11** are forced further down into the open channel portions of the several frame members **1** and **1'**, the fingers **12** will be deformed out of their normal plane. This action will cause pressure to be exerted through the medium of the crimped portions **14** of fingers **12** of the spline members **11** on the marginal edges of the screen proper. In the case of the top and bottom frame members **1**, where tensioning and stretching of the screen of the

louvered type is extremely important, it will be noted that the spline member extends transversely to the tension strips **10**. Proper tension, therefore, will be exerted upon these tension strips adjacent their point of contact with the frame members **1**. This tension will in turn be effectively transferred along the entire lengths of the strips from the top to the bottom of the screen. As a result, the primary spline member **11** provides a strong holding force applied to the entire body of the screen **8**. Spline member **11** is also advantageously used for anchoring and stiffening the side marginal edges of the screen to the side frame members **1'**.

The simplicity of the proposed framing arrangement is due to the fact that the same spline members **11** and **17** may be used with both the top and bottom frame members **1** as well as the side or edge frame members **1'**.

As indicated in Figures 4 and 5, it may be desirable in some instances to slightly modify the primary spline element **11** so that it will be provided with a bulbous portion **18** on the finger **13**. This bulbous portion is adapted to be fitted within a suitable pocket **19** formed on the inner portion of the inner wall **3** of a frame member. By the use of such a pocket **19** and bulbous portion **18**, additional means are provided for enhancing the anchoring characteristics of the primary spline member **11** within the open channel portion **4**.

It will thus be noted that a simple and efficient means is provided by the instant invention for anchoring louvered screen to both the side frame members as well as the top and bottom frame members. The primary spline member **11** also advantageously serves as a cover member for the portion of the screen which overlaps the main large bearing surface **2** of the frame. No special skill is required in the utilization of the screen locking means of the instant invention and these locking means can be readily manufactured.

The deformability of finger **12** of the primary spline member **11** and the fact that it is located at an acute angle to finger **13**, enables tension to be properly transferred to the screen under all conditions of framing. This in turn compensates for slight human errors in framing the screen or any deficiencies in manufacture of the frame members **1** and **1'** with respect to the dimensions of the various parts thereof and allows a wide range of tolerances in the overall design in the various parts of the frame members.

It is obvious that various changes may be made in the invention without departing from the spirit and scope thereof as defined by the appended claims, wherein what is claimed is:

1. In a screen frame construction of the type described, the combination of a frame provided with a bearing surface of substantial area located adjacent the inner periphery of the frame, a spline receiving open channel defined by inner and outer walls located adjacent the outer periphery of the frame, a louvered screen overlapping the bearing surface of the frame and adapted to be locked in position by spline means insertable in said channel, said spline means including an L-shaped primary spline member, the arms of which are deformable, the angle between the arms being of greater magnitude when the spline member is inserted in screen locking position in the channel than when the said arms are in an unlocking condition and prior to insertion of the spline member in said channel portion of the frame, one arm of the primary spline member being in pressure contact with the screen at a point where the screen overlies the bearing surface, the other arm being disposed within the channel and including an offset portion, a secondary spline member wedgingly forced into engagement with said last mentioned arm and the offset portion thereof and the outer wall of the channel to exert deforming pressure on said primary spline member and maintain said member in pressure exerting relation with respect to the frame and the screen, said screen extending over said surface of substantial area into the channel, said primary spline member exerting pressure against the screen both along said surface and against the inner wall of said channel, at least one wall of the channel having a pocket extending lengthwise therein, said secondary spline member being wedged into said channel and engaging said pocket in locking relation.

2. In a screen frame construction as defined in claim 1, wherein said pocket is formed in and extends lengthwise of the outermost wall of said channel defining walls of said frame.

3. In a screen frame construction of the type described, the combination of a frame provided with a bearing surface of substantial area located adjacent the inner periphery of the frame, a spline receiving open channel portion defined by inner and outer walls located adjacent the outer periphery of the frame, a louvered screen overlapping the bearing surface of the frame and adapted to be locked in position by spline means insertable in said channel, said spline means including an L-shaped primary spline member, the arms of the primary spline member being deformable and the angle therebetween being of greater magnitude when the spline member is inserted in screen locking position in the channel than when said arms of the spline member are in unflexed, unlocking condition prior to insertion in said channel, one arm of the primary spline member bearing in pressure contact with the screen at the point where the screen overlies the bearing surface, the other being disposed within the channel and including a bent lip portion, a secondary spline member wedgingly forced into engagement with said second mentioned arm and the lip portion thereon and the outer wall of the channel to exert deforming pressure on said primary spline member and maintain said primary spline member in pressure exerting relation with respect to the screen and frame, the walls of said channel having pockets extending lengthwise thereof, said primary spline member including an offset portion formed integral with the arm and insertable into said channel portion and lockingly engaging one of said pockets, said secondary spline member being wedged into said channel and lockingly engaging the offset portion of said primary spline member and the other of said pockets.

4. In a screen frame construction of the type described, the combination of a frame provided with a bearing surface of substantial area located adjacent the inner periphery of the frame, a spline receiving open channel portion defined by inner and outer walls located adjacent the outer periphery of the frame, said inner wall of said open channel including a longitudinally extending pocket, a louvered screen overlapping the bearing surface of the frame and adapted to be locked in position by spline means insertable in said channel, said spline means including an L-shaped primary spline member, the arms of the primary spline member being deformable and the angle therebetween being of greater magnitude when the member is inserted in screen locking position in the channel than when said arms are in unflexed, unlocked condition prior to insertion of the primary spline member in said channel, one arm of the primary spline member being in pressure contact with the screen at a point where the screen overlies the bearing surface, the other arm being disposed within the channel and including an offset portion engaging said longitudinally extending pocket and a bent lip portion, a secondary spline member wedgingly forced into engagement with said arm and said offset portion and said lip portion and the outer wall of the channel to exert deforming pressure on said primary spline member and maintain said primary spline member in pressure exerting relation with respect to the frame and the screen, the arm in pressure contact with the screen at the point where the screen overlies the bearing surface being crimped inwardly to engage said screen and said frame.

(References on following page)

References Cited in the file of this patent

UNITED STATES PATENTS

956,240	Watson et al.	Apr. 26, 1910
1,030,985	Edler	July 2, 1912
1,178,581	Green	Apr. 11, 1916
1,705,132	Norquist et al.	Mar. 12, 1929
1,758,720	Sodergren	May 13, 1930
1,794,534	Norquist et al.	Mar. 3, 1931
2,194,222	Ewing	Mar. 19, 1940
2,325,500	Fosberg	July 27, 1943
2,335,361	Schiller	Nov. 30, 1943
2,366,224	Warp	Jan. 2, 1945
2,627,311	Kaufmann	Feb. 3, 1953