Jan. 1, 1957 A. ISAACSON 2,775,848

SELF-STEERING TOY VEHICLE

Filed June 29, 1956 3 Sheets-Sheet 1

FIG. 1

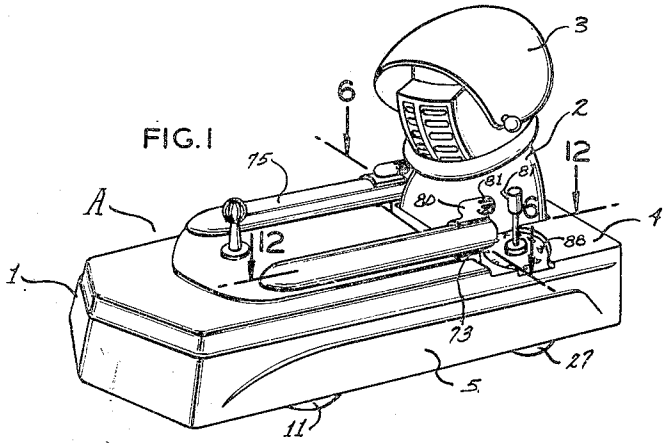

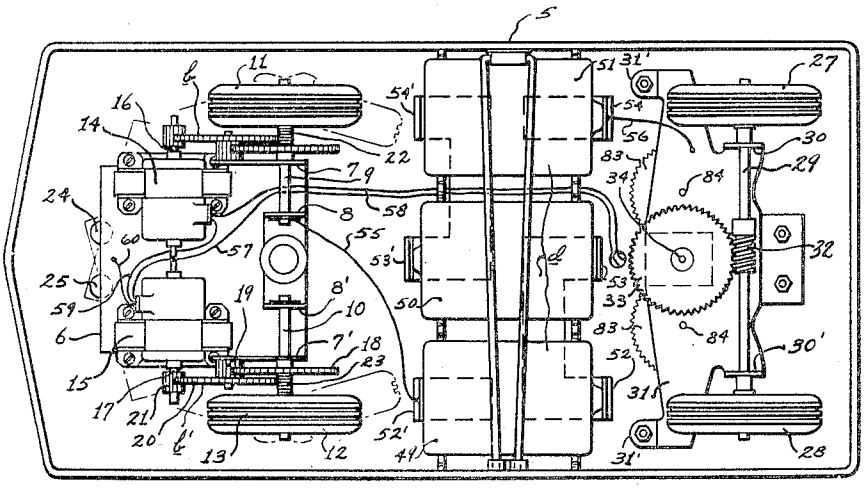

FIG. 2

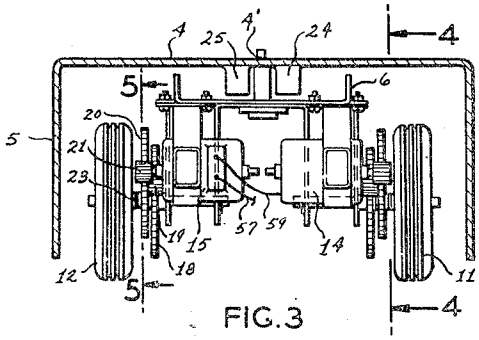

FIG. 3

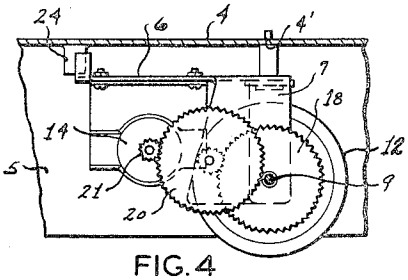

FIG. 4

INVENTOR.

ANSON ISAACSON

BY Ralph W. Kalish

ATTORNEY

SELF-STEERING TOY VEHICLE

Filed June 29, 1956 3 Sheets-Sheet 2

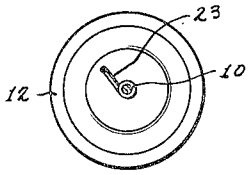

FIG.5

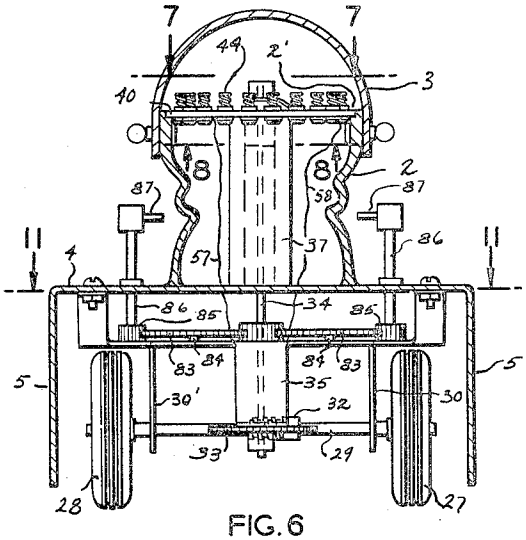

FIG.6

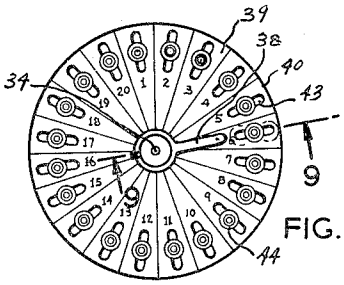

FIG.7

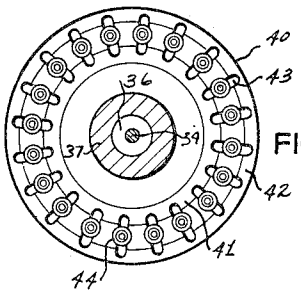

FIG.8

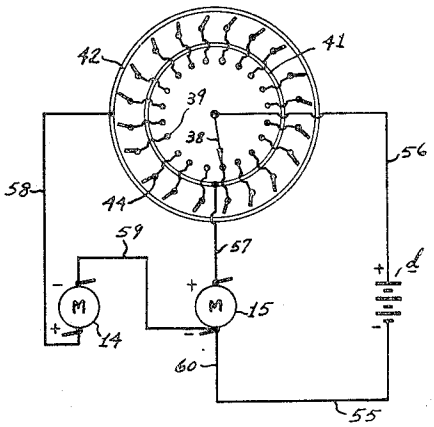

FIG.10

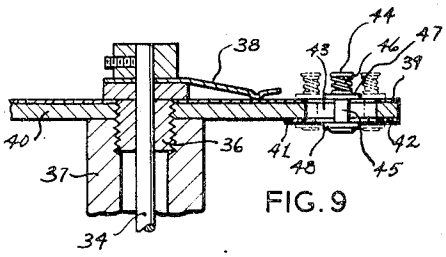

FIG.9

INVENTOR.
ANSON ISAACSON
BY Ralph M. Kalish
ATTORNEY

SELF-STEERING TOY VEHICLE

Filed June 29, 1956 3 Sheets-Sheet 3

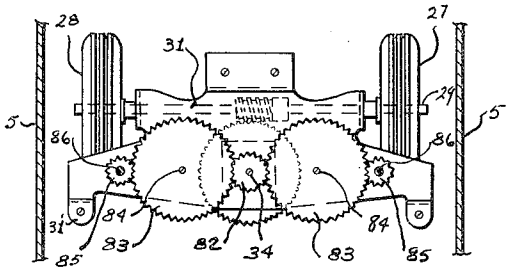

FIG. 11

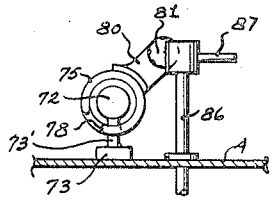

FIG. 13

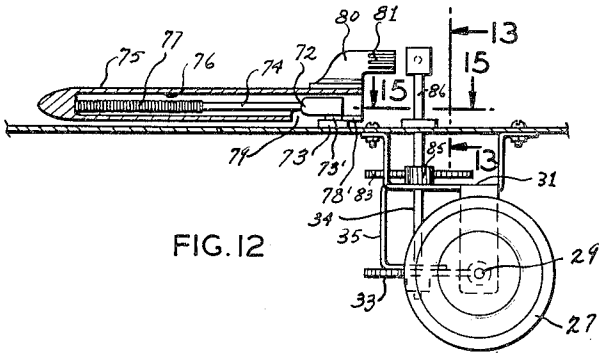

FIG. 12

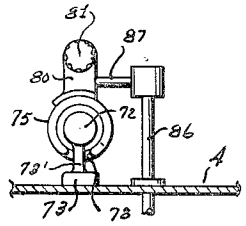

FIG. 14

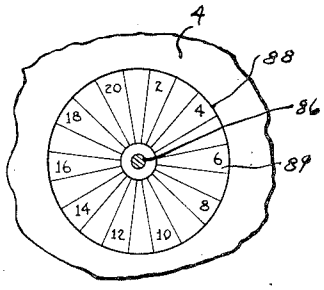

FIG. 15

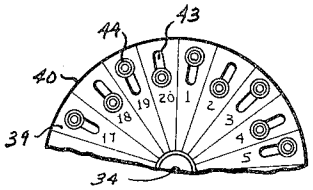

FIG. 16

INVENTOR.
ANSON ISAACSON
BY Ralph W. Kalish
ATTORNEY

United States Patent Office

2,775,848

Patented Jan. 1, 1957

1

2,775,848

SELF-STEERING TOY VEHICLE

Anson Isaacson, St. Petersburg, Fla., assignor to Jay V. Zimmerman Company, St. Louis, Mo., a corporation of Missouri

Application June 29, 1956, Serial No. 595,004

24 Claims. (Cl. 46—244)

This invention relates in general to toy vehicles and more particularly, to a vehicle adapted for traverse of a predetermined path. This application is a continuation-in-part of my co-pending application Serial No. 583,057, filed May 7, 1956, for Toy Vehicle, which has now become abandoned.

Heretofore, many expedients have been utilized for remote control steering of toy vehicles to cause same to travel along courses selected by the operator, thereby providing a heightened realistic character to the operation. Such steering expedients have customarily encompassed control means necessitating constant operation during movement of the vehicle. Among such efforts has been the utilization of control elements for remote disposition from, but physically connected to, the vehicle, as by electrically conductive leads, flexible shafts, and air tubes, so that the operator by proper manipulation of the control devices at the source of power, be it electrical, mechanical, or pneumatic, may guide or steer the vehicle. The operator must at all times be alert and attentive to the movements of the vehicle during its running, and without this constant exercise of control the vehicle will not vary from its particular path. Obviously, with such control means the distance between the vehicle and the operator will depend upon the length of the connecting members, so that the operator must either restrict the vehicle's travel within a radius equal to the length of such connectors or be forced to follow the vehicle.

Other remote control means for vehicle steering have included incorporation in the vehicle of a sound switch responsive to waves of specified frequency emitted at a distant point, as well as the installation of a radio receiver in the vehicle for reception of waves discharged from a remotely located transmitter. However, despite the fact that such wave-controlled vehicles are physically independent of the power source, the operators must be continuously engaged so as to effect the necessary wave-emission for vehicle control.

Toy vehicles have also been produced which integrally contain mechanical means for effecting a change of path of the vehicle resulting from impact between the vehicle and an object. Such toys for the most part have been of the reversing type wherein the vehicle will upon striking an obstacle be caused to effect a 180° change in direction of travel, although others have been designed to effect, responsive to impact, a swinging through a limited arc for veering beyond the obstacle. But, with toys of this type it will be recognized that the movement will in all cases follow a single, unalterable pattern so that the device will have most restricted play value.

Therefore, it is an object of the present invention to provide a toy vehicle adapted for selectedly traversing any one of a marked plurality of courses without exercise of control by the operator during the vehicle's movement.

2

It is another object of the present invention to provide a toy vehicle integrally containing control means for determining the particular course to be traversed which means are easily manipulated for desired setting.

It is a further object of the present invention to provide a toy vehicle having self-contained driving and steering control means, so that the length and pattern of the path of operation may be pre-selected, with the vehicle being independent of any remote control device.

It is a further object of the present invention to provide a toy vehicle of the type stated having means for effecting stoppage of the vehicle at any predetermined point along a particular preselected course.

It is an additional object of the present invention to provide a toy vehicle having novel clutch means associated with each front wheel so that clutching action will be effected upon motor-driven rotation thereof.

It is a still further object of the present invention to provide a toy vehicle of the type stated which may be economically manufactured; which is durable and reliable in operation; and which is rugged in construction, not being subject to ready breakdown.

It is an additional object to provide a vehicle of the character stated which comprises missile ejecting means adapted for operation so as to discharge missiles at any preselected points along a predetermined path of travel of the vehicle.

These and other detailed objects are obtained by the structures illustrated in the accompanying drawings (three sheets) in which—

Figure 1 is a perspective view of a toy vehicle constructed in accordance with and embodying the present invention.

Figure 2 is a bottom plan view of the vehicle.

Figure 3 is a front elevation view with the body shown in section.

Figure 4 is a vertical transverse section taken on the line 4—4 of Figure 3.

Figure 5 is a vertical transverse section taken on the line 5—5 of Figure 3.

Figure 6 is a vertical transverse section taken on the line 6—6 of Figure 1.

Figure 7 is a top plan view taken along the line 7—7 of Figure 6.

Figure 8 is a horizontal section taken along the line 8—8 of Figure 6.

Figure 9 is a vertical transverse section taken on the line 9—9 of Figure 7.

Figure 10 is a wiring diagram of the electrical system.

Figure 11 is a horizontal section taken along the line 11—11 of Figure 6.

Figure 12 is a vertical transverse section taken on the line 12—12 of Figure 1.

Figure 13 is a vertical end view taken on the line 13—13 of Figure 12.

Figure 14 is a vertical end view taken substantially along the line 13—13 of Figure 12, showing the missile after being tripped.

Figure 15 is a fragmentary plan view taken along the line 15—15 of Figure 12.

Figure 16 is a fragmentary plan view of the insulator plate showing the switches in alternating pattern.

Referring now by reference characters to the drawings, A designates a toy vehicle, basically of the automobile type, comprising a cast body 1, fabricated preferably of a suitable plastic with ornamental metallic trim, which may integrally include the hollow simulative figure 2 of an operator or driver; the latter, for purposes of illustration only, is depicted herein as being fashioned along the lines of a character of fantasy, or so-called "space man." Said figure portion 2 is open at its upper or head end, as

at 2′, and provided with a swingably mounted closure 3 in the nature of a conforming headpiece such as, in this instance, a helmet. It is evident that body 1 and figure 2 may be respectively of any desired style or character. Body 1 consists essentially of a platform or top surface-forming portion and a peripheral skirt 5 depending therefrom, the lower edge of which terminates in close proximity to the ground or other support surface, whereby body 1 provides a casing for obscuringly receiving the various operative elements of vehicle A, more fully described hereinbelow.

Pivotally mounted, as at 4′, upon the under forward portion of platform 4, for swinging within a horizontal plane about a vertical axis passing, preferably, through the median or center line of body 1, is the carriage 6 of a front wheel assembly; said carriage 6 being provided with depending parallel side plates 7, 7′, each of which cooperates with an inner depending finger 8, 8′, respectively, for journaling of transversely extending, axially aligned axle elements 9, 10 respectively, of a split axle arrangement. Each axle element 9, 10 projects at its outer end beyond its related side plate 7, 7′ for mounting thereon left and right front wheels 11, 12 respectively; a tire 13 being desirably provided on each wheel.

Supported from the forward under portion of carriage 6 is a pair of prime movers or motors 14, 15, of the low voltage type, being relatively disposed so that their respective drive shafts 16, 17 are axially aligned, transversely of carriage 6. Motors 14, 15 are operatively engaged, for power transmission, to axle elements 9, 10 respectively, through reduction gear trains *b*, *b′* respectively; each of which comprises an enlarged spur gear 18, suitably fixed on the related axle element 9, 10, outwardly of the associated side plate 7, 7′, meshing with idler gear 19 coaxial and integral with a toothed wheel 20, which meshes with a driving gear 21 splined or otherwise mounted on the drive shaft 16, 17 of the related motors 14, 15. Thus, by the composition of gear trains *b*, *b′* wheels 11, 12 will be caused to rotate in the same direction as the drive shaft of the associated motors 14, 15. As will be shown more fully hereinafter, motors 14, 15 are adapted to be selectedly actuated with the operation of motor 14 causing counter-clockwise rotation of wheel 11, (as viewed from the left hand side of vehicle A) while operation of motor 15 effects clockwise rotation of wheel 12, (as viewed from the right hand side of vehicle A), whereby the direction of rotation imparted to said wheels by the related motors will cause forward travel of vehicle A. On the inwardly directed face of wheels 11, 12 is secured the outer end of spiral springs 22, 23 respectively, disposed encirclingly about the adjacent portion of the related axle element 9 or 10 outwardly of the associated spur gear 18 with its other or inner end being free. Thereby each wheel 11, 12 is coupled to its respective axle element by its related spring 22, 23, each of which, hence, serves as a clutch of the generally contracting spring type. Clutch springs 22, 23 are adapted to effect clutching action when the related axle element 9 or 10 is being rotated as a result of operation of the respective motor that is, for driving its associated wheel forwardly. Thus, the clutch will "slip" or "over-run" when such axle element is not being driven by its motor and the related wheel is being rotated by friction in the same direction as when its axle element is driven. When axle element 10 is being rotated upon operation of motor 15, torque will be applied to right front wheel 12 as the clutch spring 22 engages, so that driving power is thereby applied to that wheel. As motors 14, 15 do not operate simultaneously, motor 14 will be inoperative, and its related wheel 11 will rotate freely, as its clutch "slips" producing thereby a differential actuation of the front wheels with right front wheel 12 being urged forwardly so as to swing the front wheel assembly toward the left, with the extent of swinging being determined by the striking of the front end edge of carriage 6 upon the proximate of a pair of detent members 24, 25 extending downwardly from platform 4 (see dotted lines, Figure 2). Simultaneously, the other wheel 11, without applied force or torque, will be caused to rotate by the friction between the wheel and the support surface, due to the forward motion of vehicle A, and hence, produce a desired speed differential for swinging of carriage 6 to the left. Conversely, if motor 14 is actuated, with motor 15 being hence inoperative, driving power will be applied to left front wheel 11, while the clutch 23 of right front wheel 12 "slips" so that the front wheel assembly will be swung toward the right, with the abutment between carriage 6 and detent 24 determining the angle of turn. Selected operation of motor 14, 15 will cause vehicle A to be driven to either the right or the left, respectively. It is apparent that the arc of swing of carriage 6 may be readily adjusted to any desired extent by altering the character of detents 24, 25 and properly locating abutment members on the forward edge of carriage 6, as will be within the skill of anyone versed in the art. However, herein the degree of turn has been shown as approximately 15°.

Vehicle A will continue in the particular angular path, either to right or left, until the operative motor 14, 15 has been stopped. By the unique coaction of motors 14, 15, clutch springs 22, 23, and the split axle arrangement, the steering of vehicle A is automatically achieved during operation of motors 14, 15 without the intervention of any control exterior of the vehicle.

Vehicle A is provided with a pair of rear wheels 27, 28, in tandem relationship with front wheels 11, 12, being freely rotatable upon a transverse rear axle 29 journaled in arms 30, 30′ struck downwardly from a mounting plate 31 secured through upwardly bent tabs 31′, to the under surface of the rearward portion of platform 4; said plate 31 being preferably formed of electrically conductive material, such as sheet metal, for purposes presently appearing. Fixed upon axle 29 is a worm 32, meshing with a worm wheel 33, mounted upon the lower end of a vertically disposed shaft 34, of metal for conductive purposes, which projects upwardly through aligned openings in plate 31 and platform 4, and into the hollow body of simulative figure 2; said shaft 34 being journaled at its lower end in a bracket 35 extending downwardly from mounting plate 31 and at its upper end in a bearing 36 secured within the upper end portion of a support sleeve 37. At its upper projecting extremity shaft 34 mounts for rotation therewith the wiper or conductor arm 38 of a progressive cycling switch comprising a plurality of contacts 39 arranged radially about shaft 34 and each consisting preferably of a discrete segment, plated or otherwise applied in accordance with recognized circuit printing processes, upon the upper surface of an insulator plate 40, of suitably rigid, dielectric material. Provided preferably on the under surface of insulator plate 40, for compactness, are spaced apart, concentric inner and outer collector rings 41, 32 of copper or other conductive substance.

Stamped, or otherwise formed, in insulator plate 40 within each contact segment 39, is an elongated slot 43, each of which in the extreme portions of its lower end extends into collector rings 41, 42 (see Figures 8, 9). A three-position, double-throw sliding switch 44, is disposed, for manual positionment, within each slot 43 whereby the related contact segment 39 may be selectively connected to either collector ring 41, 42. Each sliding switch 44 comprises a narrow, conductive body 45, which, if desired, may be in the nature of a rivet, having an encircling compression spring 46 bearing at one of its ends against the upper, diametrally increased upper end of body 45, and at its lower end against a conductive washer 47, presented thereby in snug abutment upon the slot-adjacent surface of the related contact segment 39; there being a similar washer 48 at the lower end of said body 45, for bearing engagement against the under surface of insulator plate 40, for establishing engagement with colletcor rings 41, 42. By means of the bias of spring 46, friction

is developed between washers 47, 48, and the opposite surfaces of insulator plate 40, so as to firmly maintain the related sliding switch 44 in selected, contact-making disposition within its associated slot 43. Referring to Figure 9: With a sliding switch 44 positioned at the inward end of its respective slot 43, the associated contact 39 will be connected with inner collector ring 41; with a switch 44 at the outer end of its related slot 43, connection will be established between its contact 39 and outer collector ring 42; and with a sliding switch 44 substantially intermediate its associated slot 43, an open-circuit condition will be developed since neither collector ring 41, 42 will be in conductive relationship with the particular sliding switch 44.

It is manifest that there may be any number of contact segments 39 with corresponding sliding switches 44. For illustration only, there is shown 20 such contacts and switches in the drawing, the same being numbered consecutively. The progressive cycling switch is thus driven through rotation of rear axle 29 during travel of vehicle A, as shaft 34 will be thereby rotated and move wiper 38 successively from one contact 39 to the next. Shaft 34 is of such length as to present insulator plate 40 at the upper end 2′ of hollow figure 2, and will thereby be normally hidden by helmet 3. However, upon forward rocking of the latter, said plate 40 will be exposed to permit the user to conveniently and easily position the sliding switches 44 within their respective slots 43 in any desired pattern.

Vehicle A is electrically powered having a power source, designated generally *d*, comprising, preferably, three 1½ volt batteries 49, 50, 51 connected in series; there being provided on the central under portion of platform 4 three sets of cooperative battery-retaining clips 52, 52′, 53, 53′, and 54, 54′, and being so constructed as to connect the positive pole of battery 49 with the negative pole of battery 50, and the positive pole of the latter with the negative pole of battery 51.

By a lead 55, the negative side of power source *d* is grounded through clip 52′ to carriage 6, the latter being of metal or other conductive material, while the positive side of said power source *d* is in circuit by a conductor 56 with wiper 38 of the cycling switch. Conductor 56 is fixed at one end to clip 54 with its other end secured, as by soldering, to mounting plate 31; it being noted that the conductive character of the material of construction of the latter and of the shaft completes the connection.

Inner collector ring 41 is connected by a conductor 57 with one pole of motor 15, and the outer collector ring 42 is connected by a lead 58 to one pole of motor 14. Motors 14, 15 are inter-connected by a lead 59 extending between their other poles, which are, in turn, connected to a common ground 60 to carriage 6, thereby completing connection to the negative side of power source *d* through conductor 55. Motor connections are made to effect the rotation of said motors 14, 15 in opposite directions when viewed from their respective shaft ends.

Referring to the wiring diagram shown in Figure 10, it will be seen that with wiper 38 engaging a contact 39 connected to inner collector ring 41 by the related sliding switch 44, current flow is established for directing current from power source *d*, through lead 56, wiper 38, contact 39, switch 44, ring 41, and lead 57, to one pole of motor 15, and thence, from motor 15 to source *d* along grounded conductors 60, 55, to energize motor 15 for effecting rotation of axle element 10 to drive wheel 12 forwardly and to the left, as above described. With the circuit closed through outer collector ring 42, power source *d* will be connected to motor 15 through lead 56, wiper 38, contact 39, switch 44, outer ring 42, lead 58 to one pole of motor 14, and thence to power source *d* through leads 59, 60 and 55. Thereby, motor 14 is actuated to effect driven forward motion of wheel 11, resulting in vehicle A turning to the right, as described above. Consequently, the disposition of sliding switches 44 will determine the frequency with which motors 14, 15 are energized. Switches 44 may be selectively located within their slots 43 in any desired arrangement to achieve a preselected performance of vehicle A. For instance, switches 44 may be alternately disposed at the inner and outer ends of their respective slots 43, as suggested in the fragmentary view shown in Figure 16 so that as wiper 38 moves from one contact 39 to the next, motors 14, 15 will be alternatingly operated resulting in the vehicle following, what might be termed, a zig-zag path, that is, first moving to right as motor 14 is, through outer ring 42, brought into circuit with power source *d*, and then to the left as motor 15, through inner ring 41, is connected. By the use of motors 14, 15, considerable torque is developed, so that vehicle A will effectively operate over varying types of friction-producing support surfaces.

As another example, a number of successive switches 44 might be located at the same end of their respective slots 43 so that as the wiper 38 rotates, vehicle A will continue its turn in the particular direction. Thus, a complete circle may be traversed as by a specified number, as four, of consecutive switches 44 being located at the same end of their respective slots 43. Accordingly, an arrangement might be selected whereby each successive group of 4 switches 44 are located alternatingly at the opposite ends of their slots so that the vehicle will make a complete circle by turning in one direction and then prescribe a circle in turning in the other direction, thereby following a course along the lines of a figure 8.

An unlimited series of movements of vehicle A may thus be achieved by the appropriate setting of switches 44, with resulting sequential operation of motors 14, 15. By its unique steering control vehicle A is endowed with extreme maneuverability as its switches 44 may be so set as to cause it to move successfully through an obstacle bestrewn path. For example, the user might position switches 44 so tht vehicle A will turn about or weave through a series of pylons or circumvent objects disposed at mutually remote locations, etc. Hence, through its sensitive control vehicle A may be adapted to automatically traverse any preselected path so that maximum variation in course is rendered feasible. After completion of a revolution of wiper 38, vehicle A will repeat its travel path and will continue to do so as long as it operates. In order to terminate movement of vehicle A it is requisite that the circuit be opened at the particular point where stoppage is desired. This is accomplished by positioning centrally of its slot 43 the switch 44 associated with the contact segment 39 corresponding to the selected point of stoppage. As will be recalled, each switch 44 when so disposed will be out of engagement with either collector ring 41, 42 to break the circuit.

Through the selective disposition of switches 44 the user can cause vehicle A to automatically move through any chosen path, which movement will not require continuous attentive operation or exercise of control by the user. It will be seen that through novel steering control means of the present invention, vehicle A will prove markedly fascinating and interest-retaining, as its seemingly infinite number of optional courses, with its attendant versatility and maneuverability, will provide a continuous source of amusement value. The distance traversed by vehicle A during the swinging of wiper 38 from one contact 39 to the next will, of course, be determined by the speed of rotation of shaft 34 and the degree of reduction in gear trains *b*, *b′*. It is thus obvious that gear ratios may be selected which will increase or decrease, as desired, the angular velocity of wiper 38 and/or that of front wheels 11, 12, so that extent of travel per contact segment may be determined.

Mounted upon the upper surface of platform 4 on either side thereof just forwardly of figure 2 is an elongated, forwardly extending mount or launcher 72, each consisting of a base 73 with a reduced portion 73′ and a rod-

like arm 74 (see Figure 12) projecting forwardly from the upper end of base 73 in axial perpendicular relationship thereto, spacedly above platform 4. Mounts 72 are each designed to receive a missile or rocket-simulative member 75, fabricated preferably of plastic, and provided with a bore 76 progressing inwardly from the rearward end thereof for receiving a coil spring 77, the forward end of which is secured at a point on the forward end wall of bore 76 with the rearward end being free. Mount arm 74 will be relatively projected into bore 76, forcing spring 77 compressingly forwardly, placing same under load or in energy-storing condition. In the lower portion of its rearward end, each missile 75 is cut away to form a slot 78 for extension therein of the reduced portion 73′ of mount base 73 with a lug 78′ being formed at the rearward end extremity of each missile 75 which, upon sufficient compression of spring 77, will be presented rearwardly of the base 73 of the proximate mount 72, so that upon turning of the missile inwardly through a slight angle, said lug 78′ will be disposed for abutment against the end face of the reduced portion 73′ to secure the missile 75 in firing readiness. Each missile 75 is also provided with a lateral, cut away portion, as at 79, to permit such turning. Projecting upwardly at the rearward end of each missile 75 is a fin or foil-like member 80 heaving an extension 81.

Thus, with each missile 75 engaged for "firing" upon its respective mount 72, the same will be disposed so that upon the application of an outwardly directed force against the fin extension 81, the same will be rotated returningly through an arc to displace lug 78′ from engagement with the mount bases, thereby effecting release of spring 77 with resulting ejection in a manner representative of rocket firing.

The system for accomplishing missile discharge comprises a driving gear 82 keyed or otherwise mounted upon shaft 34 between mounting plate 31 and platform 4 which on diametrally opposite sides engages spur gears 83, the latter being each secured upon a stub shaft 84 journaled in mounting plate 31 and, in turn, meshing with a pinion 85 fixed upon a vertically disposed shaft 86 journaled in aligned openings in mounting plate 31 and platform 4, and extending upwardly above platform 4; said shafts 86 each being axially shiftable through a distance equal to the clearance of pinion 85 between mounting plate 31 and platform 4 which is slightly greater than the thickness of said pinion 85 so that each shaft 86 may be raised to clear its pinion 85 from engagement with the adjacent spur gear 83 to allow free manual rotation of the shafts 86, for purposes presently appearing. Fixed upon the upper end of each shaft 86 is a radially projecting arm 87 which is positioned thereon for striking fin extension 81 of the related missile 75 upon rotation of such shaft. Presented about each shaft 86, preferably inscribed, stamped, or otherwise provided, upon the upper face of platform 4 is an indicator face 88 and having segments 89 delineated thereon, which in the case of the right hand indicator correspond to the odd numbered contact segments 39 in the progressive cycling switch and on the left hand indicator corresponds to the even numbered segments 39 thereof. Thus, as shafts 34 and 86 are operatively connected through the various gears, and with both being powered by rotation of rear axle 29, the firing or ejection of the missiles 75 may be executed at any desired point of travel of vehicle A. The user will lift each shaft 86 to turn same so that the related arm 87 will overlie that segment 89 of the respective indicator face 88 bearing the same number as the contact segment 39 which represents the particular juncture of travel of vehicle A at which it is desired to have the missile ejected. It is recognized that the firing point of each missile 75 is independently set, so that the missile on the right hand side of vehicle A will be fired if the selected contact segment 39 bears an odd number, and that on the left hand side will be fired by the selection of an even numbered segment 39. After the arm 87 has been so set, shafts 86 are returned downwardly for restoring engagement between the pinions 85 and associated spur gears 83. Thus, it will be seen that upon rotation of shafts 86 arms 87 will be brought into contact with the fin extension 81 of the related missile 75 and thereupon effect rotation of such missile 75 about its mount so as to free lug 78′ from engagement with the mount base 73, thereby tripping the spring for missile firing.

The novel co-action between the missile ejecting system and the steering control mechanism permits the missiles 75 to be "fired" at predetermined targets located at selected points along the vehicle course, whereby control as to both place and time of firing is provided.

It should be understood that changes and modifications in the formation, construction, arrangement, and combination of the several parts of the toy vehicle may be made and substituted for these herein shown and described without departing from the nature and principle of my invention.

Having thus described my invention, what I claim and desire to secure by Letters Patent is:

1. In a toy vehicle having a body, first and second electric motors, front wheels driven by said motors, a rear axle supported by said body and mounting rear wheels, a source of electric power carried on said vehicle, circuit means for connecting said power source to said first and second motors, a switch provided in said circuit and having first and second spaced apart concentric poles respectively connected to the first and second motors, a plurality of manually disposable switch members disposed between said first and second poles for radial movement therebetween into selected contact therewith at one of their ends, a shaft operatively engaged to said rear axle and being in concentric relationship with said first and second switch poles, a conductive member mounted on said shaft for rotative movement therewith and being connected to the power source, contacts disposed radially about said shaft for progressive circuit-making engagement with said conductive member, said contacts each being associated with a switch member whereby the circuit to either motor will be closed selectively in any desired pattern through said power source during rotation of said shaft.

2. In a toy vehicle having a body, front and rear axles mounting respectively front and rear wheels, a mounting member on said body, a missile-simulative member adapted for latched disposition on said mounting member, resilient means secured to said missile-simulative member, said resilient means being adapted for loading when the missile simulative member is in latched condition, a projection provided on said missile-simulative member, a shaft disposed for rotation on said body, an arm carried on said shaft for engaging said projection for unlatching of said missile-simulative member to permit travel thereof by load-release of the resilient means, and mechanical means operatively engaging said arm to one of said axles.

3. In a toy vehicle as described in claim 1 wherein a launching-type mounting member is disposed on said body, a missile-simulative member provided for latched disposition on said mounting member, a compressible member associated with said missile-simulative member for stressing when the latter is in latched condition, an arm disposed for rotation on said body for engaging said missile-simulative member for unlatching of same, an indicator associated with said arm and being delineated into segments corresponding to said switch members, and means for operatively engaging said shaft and said arm.

4. In a wheeled toy vehicle having first and second motors for driving wheels thereof, a source of power carried on said vehicle, circuit means connecting said power source and first and second motors, a wiper arm, means for effecting rotation of said wiper arm, said wiper

arm being connected to said power source, a switch member connected with said circuit means and comprising first and second spaced apart annular, concentric poles, respectively connected to said first and second motors, a plurality of fixed conductors mutually insulated and spaced from said poles, said fixed conductors being presented in radially extending manner from the center of movement of said wiper arm for successive circuit-closing engagement therewith, and a mobile conductor slideably engaged to each fixed conductor for establishing contact between the same and either of said switch poles.

5. In a wheeled toy vehicle having first and second motors for driving wheels thereof, a source of power carried on said vehicle, circuit means connecting said power source and first and second motors, a wiper arm, means for effecting rotation of said wiper arm, said wiper arm being connected to said power source, a switch member connected with said circuit means and comprising a dielectric body portion, first and second poles mounted in spaced apart relation on one face of said body portion, a plurality of fixed conductors mounted on another face of said body portion for successive engagement with said wiper, said body portion having an opening associated with each of said fixed conductors for extension through the face bearing said poles, each opening at its opposite ends extending into said poles, and a mobile conductor disposed in each opening and projecting therethrough for secure selected disposition therealong to permit circuit-closing contact between the associated fixed conductor and either of said poles.

6. In a wheeled toy vehicle having first and second motors for driving wheels thereof, a source of power carried on said vehicle, circuit means connecting said power source and first and second motors, a wiper arm, means for effecting rotation of said wiper arm, said wiper arm being connected to said power source, a switch member connected with said circuit means and comprising a dielectric body portion, first and second spaced apart concentric poles mounted on one face of said body portion, a plurality of spaced apart fixed conductors mounted on the opposite face of said body portion in radial relation with respect to the center of movement of said wiper, said body portion having openings extending therethrough in correspondence with said fixed conductors each of which surrounds the proximate end of the related opening, the other ends of said openings at their extremities extending into said first and second poles, and a mobile conductor disposed in each opening and projecting at its ends therethrough, each mobile conductor having means for maintaining contact with its associated fixed conductor, and means for securely maintaining each mobile conductor in selected disposition within its related opening for permitting the establishment of contact between its associated fixed conductor and either pole.

7. A system for operation of electric-powered units in accordance with a pre-selected sequence pattern comprising a power source, a plurality of electric powered units connected to said power source, a wiper adapted for rotary movement, means for effecting rotation of said wiper, said wiper being connected to said power source, a switch member having a plurality of spaced apart poles corresponding to said electric powered units, each pole being connected to its related unit, a plurality of fixed conductor members disposed for successive engagement with said wiper and spaced from said poles, and a plurality of mobile conductive members, means for movably engaging each mobile conductive member with a fixed conductor, each mobile conductive member projecting into the space between adjacent poles, each mobile conductive member being of such extent as to extend between its related fixed conductor and one of said poles whereby circuit-closure may be established between each fixed conductor and a preselected pole.

8. A system for operation of electric-powered units as described in claim 7 wherein the mobile conductive members are of less extent than the distance between the proximate poles whereby disposition of said mobile members intermediate the proximate poles will cause a circuit-open condition to obtain.

9. A system for operation of electric-powered units as described in claim 7 wherein the poles are in concentric relationship and each mobile member is adapted for radial movement with respect to said poles for engaging a selected pole in one end portion of such mobile member, each mobile member being in slideable engagement in its other end portion with the related fixed conductor for maintaining constant contact therewith.

10. A system for operation of electric-powered units in accordance with a pre-selected sequence pattern comprising a power source, a plurality of electric powered units connected to said power source, a wiper adapted for rotary movement, means for effecting rotation of said wiper, said wiper being connected to said power source, a switch member comprising a dielectric body portion, a plurality of spaced apart poles mounted on one face of said body portion, each of said poles being connected to an electric powered unit and hence corresponding in number therewith, a plurality of fixed conductors mounted on another face of said body portion and presented for successive engagement with said wiper, said body portion having openings extending therethrough from the face bearing said fixed conductors to the face mounting said poles, each opening at one end being surrounded by a fixed conductor and at its other end opening within the space between, and extending at its extremities into, adjacent poles, a mobile conductor projecting through and movable within each opening and having means in opposite end portions for establishing contact with the related fixed conductor and either of said poles.

11. A system for operation of electric-powered units as described in claim 10 wherein each mobile conductor is of less extent than the distance between adjacent poles whereby disposition intermediate such will cause a circuit-open condition to obtain.

12. A system for operation of electric-powered units as described in claim 10 wherein each mobile conductor has a body portion sized for movement throughout the related opening, means mounted on said body portion adjacent one end thereof for contactive engagement with the associated fixed conductor, said mobile conductor in its other end portion being of less extent than the distance between adjacent poles whereby disposition intermediate same will cause a circuit-open condition to obtain.

13. A switch member comprising a dielectric body portion, a plurality of spaced apart poles mounted on one face of said body portion, a plurality of fixed conductors mounted on an opposite face of said body portion, said body portion having openings extending therethrough, each opening at one of its ends opening through a fixed conductor and at its other end opening into the space between a mutually adjacent pair of poles, and a movable conductor disposed in each opening and projecting at its ends therethrough, means on one end of said conductor for maintaining same in engagement with its related fixed conductor, and means for maintaining each movable conductor in selected disposition within its related opening for establishing circuit-making contact with either of the adjacent poles.

14. In a wheeled toy vehicle having a body, a missile-mounting member carried on said body comprising a base and an arm projecting forwardly thereof, a missile-simulative member having a bore progressing from its rearward end for receiving said arm when disposed on said mounting member, a resilient member provided in the forward end portion of said bore for load-applying compression by said arm, a lug provided on the rearward end portion of said missile-simulative member for latchingly engaging a rearward edge portion of said mounting member base when said resilient member is compressed, a pro-

jection carried on said missile-simulative member in angular relationship to said lug, a shaft mounted for rotation on said body, a radially extending arm carried on said shaft for engaging said projection to effect rotation of said missile-simulative member about said mounting member whereby disengagement between said lug and base results to free said missile-simulative member for discharge under influence of said resilient member, and means operatively connecting said shaft with wheels of said vehicle for movement responsive thereto.

15. In a wheeled toy vehicle as described in claim 14 wherein the body comprises a platform portion, said mounting member is disposed on said platform, and said shaft projects upwardly through said platform with the axis thereof normal to the plane of said platform.

16. In a toy vehicle having a body, front and rear axles mounting respectively front and rear wheels, a mounting member on said body, a missile-simulative member adapted for latched disposition on said mounting member, resilient means secured to said missile-simulative member adapted for loading when the latter is in latched condition, a projection provided on said missile-simulative member, a shaft disposed for rotation on said body, an arm carried on said shaft for engaging said projection for unlatching of said missile-simulative member to permit travel thereof by load-release of the resilient means, a driven member engaged on said shaft, power transmission means operatively connecting said driven member with an axle for effecting rotation of said shaft responsive to rotation of the related axle, said shaft being adapted for optional movement for removing said driven member from engaged relation, and an indicator member provided about said shaft for selected relationship thereof with said arm when said shaft is disengaged whereby the firing point of said missile-simulative member during travel of said vehicle may be predetermined.

17. In a wheeled toy vehicle having first and second motors for driving wheels thereof, a source of power carried on said vehicle, circuit means connecting said power source and first and second motors, a wiper arm operatively engaged to wheels of said vehicle for movement responsive thereto, said wiper arm being connected to said power source, a switch member connected with said circuit means and comprising a multi-surfaced dielectric member, first and second poles spaced from said wiper arm and secured to one surface of said dielectric member, said first and second poles being respectively connected to said first and second motors, a plurality of fixed conductive members mounted on another surface of said dielectric member, and disposed for successive circuit-making engagement with said wiper, and a movable conductive member associated with each fixed conductive member for selectedly establishing contact between the same and either of said switch poles.

18. A switch member comprising a dielectric body portion, at least two concentric poles mounted on one face of said body portion, a plurality of fixed conductors mounted on an opposite face of said body portion, said fixed conductors being insulated from each other, a wiper arm adapted for successively engaging said fixed conductors, said body portion having openings extending therethrough, each opening at one of its ends opening through a fixed conductor and at its opposite end opening into the space between said poles, a movable conductor projecting through each opening and having a body for slideable movement therein between said poles, first contact means mounted on each mobile conductor adjacent one of its ends for maintaining constant contact with the related fixed conductor, and second contact means mounted on the opposite end of each mobile conductor for engaging the adjacent pole when the mobile conductor is disposed at either lateral extremity of the associated opening.

19. A switch member comprising a dielectric body portion, at least two concentric poles mounted on one end face of said body portion, a plurality of fixed conductors mounted on an opposite face of said body portion, said fixed conductors being insulated from each other and radiating from a point axially aligned with the center of said poles, a rotatably mounted wiper arm disposed for successively engaging said fixed conductors, said body portion having openings therethrough, each opening extending radially between said poles and projecting thereinto in opposite edge portions, a mobile conductor disposed within each opening for radially directed slideable movement therein, means for maintaining constant contact between a mobile conductor and a fixed conductor, and a contact element carried on each mobile conductor for circuit-making engagement with the adjacent pole when a mobile conductor is at an extremity of its related opening.

20. A switch member as described in claim 19 wherein the combined cross section of each mobile conductor and its contact element is less than the distance between the poles so that when a mobile conductor is disposed intermediate the poles an open circuit condition will obtain.

21. A system for operation of electric-powered units in accordance with a pre-selected sequence pattern comprising a power source, a plurality of electric powered units connected to said power source, a wiper adapted for rotary movement, means for effecting rotation of said wiper, said wiper being connected to said power source, a switch member having a plurality of spaced apart annular concentric poles corresponding in number to said electric powered units, each pole being connected to its related unit, a plurality of fixed conductors mutually insulated and spaced from said poles, said fixed conductors being presented in radially extending manner from the center of movement of said wiper arm for successive circuit-closing engagement therewith, and at least one mobile conductor slideably engaged to each fixed conductor and disposed for movement between a pair of adjacent poles for establishing contact between either one of the same and its associated fixed conductor.

22. In combination with a rotatably mounted wiper arm, a switch member having a plurality of spaced apart annular concentric poles, a plurality of fixed conductors mutually insulated and spaced from said poles, said fixed conductors being presented in radially extending manner from the center of movement of said wiper arm for successive circuit-closing engagement therewith, and at least one mobile conductor slideably engaged to each fixed conductor and disposed for movement between a pair of adjacent poles for establishing contact between either one of the same and its associated fixed conductor.

23. In a toy having a body, first and second electric motors, locomotion means provided on said toy and driven by said motors, a source of electric power carried on said toy, circuit means for connecting said power source to said first and second motors, a switch provided in said circuit means and having first and second spaced apart concentric poles respectively connected to said first and second motors, a plurality of manually disposable switch members disposed between said first and second poles for radial movement therebetween into selected contact therewith at one of their ends, a wiper arm connected to said power source and adapted for rotation about the center of said poles, means for rotating said wiper arm, contacts disposed radially about the center of rotation of said wiper arm for progressive circuit-making engagement therewith, means for effecting movable engagement between each switch member and a contact whereby the circuit to either motor will be closed selectively in any desired pattern through said power source during rotation of said wiper arm.

24. In a wheeled toy vehicle having a truck swivelly mounted thereon for steering the vehicle, wheels mounted for rotation on said truck, at least one driving motor, transmission means operatively engaging said motor to

at least one wheel of said vehicle for driving and steering the vehicle, a source of power carried on said vehicle, circuit means connecting said power source and said driving motor, a wiper arm, means for effecting rotation of said wiper arm, said wiper arm being connected to said power source, a switch member connected with said circuit means and comprising first and second spaced apart concentric poles, at least one of said poles being connected to said driving motor, a plurality of fixed conductors spaced from said poles, said fixed conductors being presented in radially extending manner from the center of rotation of said wiper arm for successive circuit-closing engagement therewith, and a plurality of mobile conductors, means for movably engaging each mobile conductor with a fixed conductor, each mobile conductor member projecting into the space between said poles, each mobile conductive member being of such extent as to extend between the related fixed conductor

and one of said poles whereby circuit-closure may be established between each fixed conductor and either of said poles for preselected operation of said motor.

References Cited in the file of this patent

UNITED STATES PATENTS

1,528,654	Cancienne	Mar. 3, 1925
2,061,827	Brooks	Nov. 24, 1936
2,248,144	Westby	July 8, 1941
2,279,386	Carver	Apr. 14, 1942
2,488,464	Arpin	Nov. 15, 1949
2,551,109	Fornary	May 1, 1951
2,683,956	Conte	July 20, 1954
2,697,300	Lohr	Dec. 21, 1954
2,735,221	Fields	Feb. 21, 1956
2,742,735	Sommerhoff	Apr. 24, 1956