Nov. 13, 1956 D. F. SAURENMAN 2,770,308

BOREHOLE APPARATUS OPERATED BY THE WELL FLUID

Filed Aug. 11, 1954

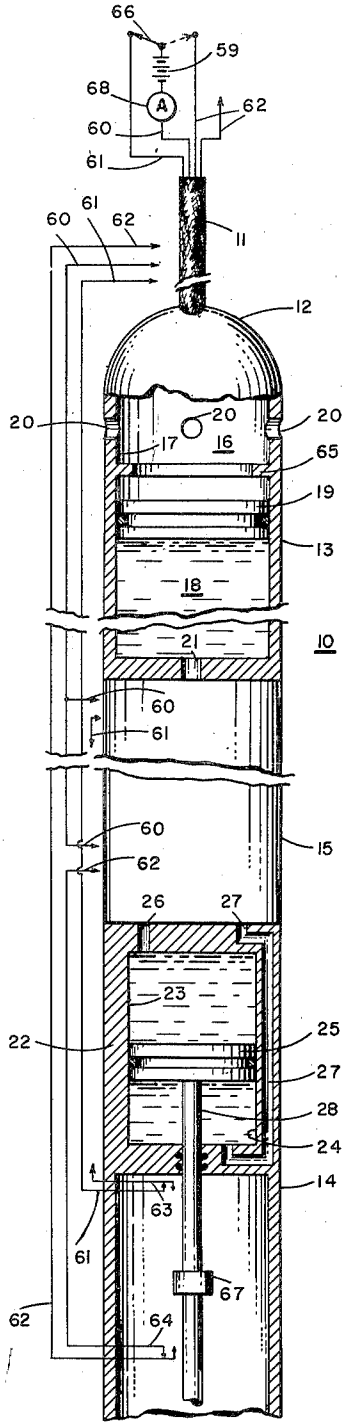

FIG. 1

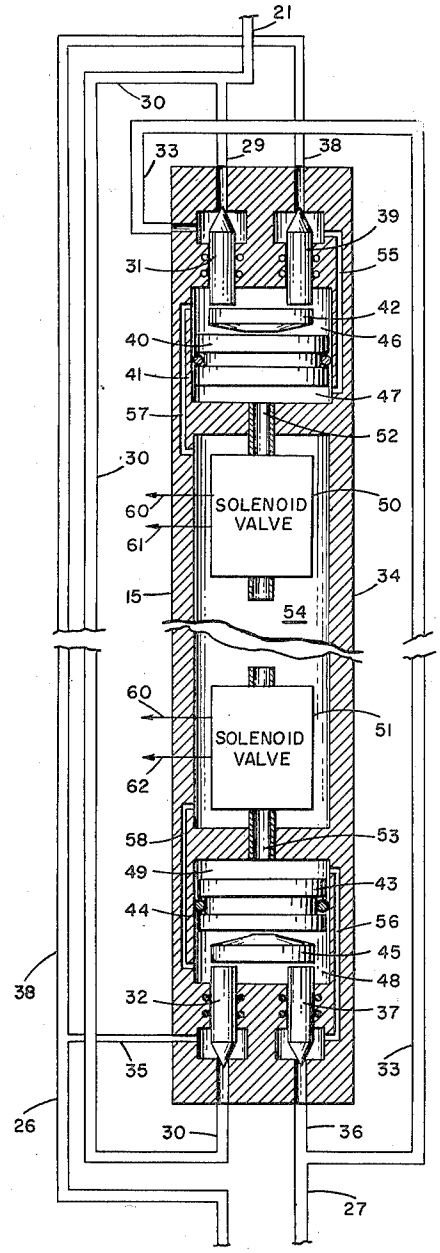

FIG. 2

INVENTOR.
DEAN F. SAURENMAN

BY Earle W. Walker Jr.

HIS ATTORNEY

United States Patent Office

2,770,308

Patented Nov. 13, 1956

1

2,770,308

BOREHOLE APPARATUS OPERATED BY THE WELL FLUID

Dean F. Saurenman, Houston, Tex., assignor to Schlumberger Well Surveying Corporation, Houston, Tex., a corporation of Delaware

Application August 11, 1954, Serial No. 449,231

3 Claims. (Cl. 166—65)

The present invention relates to borehole apparatus and more particularly to new and improved apparatus for controlling the application of the hydrostatic pressure of the column of liquid contained in a borehole to motive equipment immersed in such column of liquid.

One successful method of operating mechanical equipment in a borehole containing a column of liquid is to apply the difference between the pressure in a low pressure cylinder in such equipment and the hydrostatic pressure of the column of liquid at the level of the equipment across a piston contained therein, the resulting movement of the piston supplying the necessary mechanical power to operate the equipment. Heretofore, however, this method has been capable of supplying only a single stroke of mechanical motion, the equipment having to be brought to the surface and reset if additional operations are required. In addition, the method has been capable of supplying motion in one direction only, any reciprocating stroke required being supplied by additional means such as a spring.

It is a primary object of the invention to provide novel apparatus for controlling the application of the hydrostatic pressure of the column of liquid in a borehole to motive equipment immersed in such column of liquid, whereby a reciprocating action may be obtained.

Another object of the invention is to provide novel apparatus of the foregoing nature, wherein multiple mechanical operations may be obtained in a single trip in the borehole.

A further object of the invention is to provide novel apparatus for controlling application of pressure from a high pressure source to motive equipment.

These and other objects of the invention are attained by providing a remotely controllable apparatus for switching the application of the pressure from the hydrostatic pressure of the column of liquid contained in the borehole to alternate sides of a driving element for motive means contained in a borehole. More particularly, the apparatus may comprise two similar valves, the operation of one of which is adapted to couple a high pressure source into a first channel, the operation of the other of which is adapted to couple said source into a second channel. In addition, the operation of the first valve is coupled with the operation of a third valve adapted to drain the second channel into a low pressure container, and the operation of the second valve is coupled with the operation of a fourth valve adapted to drain the first channel into the low pressure container. It will be seen that by cyclic operation of the first and second valves high pressure will be alternately applied to the first and second channels, respectively, and the second and first channels will be alternately drained into a low pressure container. The high pressure may be supplied by the hydrostatic pressure of a column of borehole liquid at the level of the apparatus, and the two channels may be connected to opposite sides of a driving element for motive means associated in the borehole with the control apparatus.

2

The invention will be more fully understood with reference to the accompanying drawings in which:

Fig. 1 is a schematic representation, partially in section, showing typical borehole equipment into which the novel control apparatus in accordance with the invention may be coupled; and

Fig. 2 is a schematic diagram of a control apparatus constructed in accordance with the present invention.

In Fig. 1, borehole equipment **10** is adapted to be passed through a borehole containing a column of liquid, such as drilling mud, by means of a conventional electric cable **11** connected to cable head **12** at the top of equipment **10**. Equipment **10** includes an element **13** for converting the hydrostatic pressure of the drilling mud to an equal pressure in a transfer fluid in order to supply the high pressure necessary to operate equipment **10**. In addition, there is provided a driving section **14** adapted to supply a controlled reciprocal motion to any desired mechanically-actuated borehole apparatus. Such apparatus may be, for example, a sidewall formation fluid sampler such as described in L. S. Chambers' Patent No. 2,674,313, issued April 6, 1954, or a logging or calipering tool such as described in Saurenman and Lebourg application Serial No. 419,678, filed March 30, 1954, for "Borehole Apparatus," and assigned to the assignee of the instant application.

In order to control the high pressure output of element **13** to properly operate driving section **14**, control apparatus **15** is provided in accordance with the invention, and described hereinafter in connection with Fig. 2.

Element **13** may comprise a hollow cylinder **16** divided into an upper chamber **17** and a lower chamber **18** by means of a movable piston **19**. A plurality of ports **20** in chamber **17** above piston stop **65** are adapted to expose the upper side of piston **19** continuously to the drilling mud in any borehole through which equipment **10** is passing. Lower chamber **18** is filled with a substantially incompressible fluid such as light oil. In the base of chamber **18** is a channel **21** by means of which the oil in chamber **18** under high pressure as a result of the hydrostatic pressure of the drilling mud in chamber **17**, is applied to control apparatus **15**. It will be understood that if the borehole contains a liquid of more suitable transfer chacteristics than the usual drilling mud, element **13** will be unnecessary and channel **21** may be coupled directly to such liquid.

Driving section **14** may include a cylinder **22** divided into an upper chamber **23** and a lower chamber **24** by means of movable piston **25**. Cylinder **22** is filled with the same incompressible fluid as is in high pressure chamber **18**. A channel **26** connects upper chamber **23** to control apparatus **15**, and a channel **27** connects lower chamber **24** to apparatus **15**. It can be seen that if the pressure in channel **26** is alternately increased and decreased while the pressure in channel **27** is alternately decreased and increased, a reciprocating movement will be supplied to piston **25**. Piston rod **28** may be employed to transfer the motion of piston **25** to the desired borehole apparatus.

In Fig. 2, where a diagram of typical control apparatus **15** constructed in accordance with the invention is shown, the high pressure fluid in channel **21** may be supplied via channels **29** and **30** to one side of normally-closed needle valves **31** and **32** respectively, in opposite ends of cylindrical housing **34**. The other side of needle valve **31** is connected by fluid channel **33** to channel **27** opening into piston chamber **24** (Fig. 1). The other side of needle valve **32** is connected by fluid channel **35** to channel **26** opening into piston chamber **23** (Fig. 1).

Channel **27** is also coupled by a fluid channel **36** to one side of a needle valve **37** operable simultaneously with needle valve **32**; and channel **26** is coupled by a fluid

channel 38 to one side of needle valve 39 operable simultaneously with needle valve 31. Needle valves 31 and 39 are operated simultaneously by means of a piston 40 in a cylinder 41 bearing on equalizer 42. Needle valves 32 and 37 are operated simultaneously by means of a piston 43 in a cylinder 44 bearing on equalizer 45. Piston 40 divides cylinder 41 into an upper chamber 46 and a lower chamber 47; piston 43 divides cylinder 44 into a lower chamber 48 and an upper chamber 49. Chambers 47 and 49 are normally filled with the same transfer fluid as is contained in high pressure chamber 18 (Fig. 1), and the pressures in chambers 47 and 49 are controlled respectively by electrically operated solenoid valves 50 and 51 connecting ports 52 and 53 in chambers 47 and 49 to elongated low pressure tank 54.

The other sides of needle valves 39 and 37 are connected respectively by means of channels 55 and 56 to chambers 47 and 49. Chambers 46 and 48 on the needle valve sides of pistons 40 and 43 respectively are connected by means of channels 57 and 58 to low pressure tank 54. Needle valves 31, 32, 37 and 39 are biased towards the open positions by the pressure differential between channels 29, 30, 36, 38 and chambers 46, 48 across said valves. To assure positive opening action when the pressure differential becomes low, a plurality of springs (not shown) to actuate the valves may be provided. However, needle valves 31, 32, 37 and 39 are normally maintained closed as a result of the pressure applied by pistons 40 and 43.

Solenoid valve 50 is adapted to be selectively opened from the surface of the earth by the application of current from source 59 to cable conductors 60 and 61 passing to solenoid valve 50. Solenoid valve 51 is adapted to be similarly opened by application of current to conductors 60 and 62. As shown in Fig. 1, conductor 61 is adapted to be opened by a switch 63 upon the full upward movement of piston 25; conductor 60 opened by switch 64 upon the fully downward movement of said piston.

In operation, before tool 10 is lowered into the borehole, chamber 18 is filled with light oil such that piston 19 rests upwardly against stop 65. All fluid channels as well as chambers 23 and 24, and chambers 47 and 49 are filled with the light oil. Solenoid valves 50 and 51 are closed, thus closing ports 52 and 53 and isolating chambers 47 and 49 from low pressure tank 54, which may be filled with air at atmospheric pressure. Needle valves 31, 32, 37 and 39 are closed as a result of the pressure exerted by the oil on pistons 40 and 43, from oil filled chambers 47 and 49. Initially, piston 25 may be in its fully upward position.

Tool 10 is now lowered into a borehole containing a column of liquid which exerts a substantial pressure on the upper surface of piston 19, thereby applying a pressure to the light oil in channels 29 and 30 blocked by needle valves 31 and 32 respectively. When it is desired to begin operation of motive element 14, electric switch 66 at the surface is connected to conductor 62, activating solenoid valve 51 and opening chamber 49 into low pressure tank 54, via port 53. Needle valves 32 and 37 are now free to open since piston 43 may slide upwardly, displacing the light oil in chamber 49 into low pressure tank 54. The high pressure oil from chamber 18 may now pass freely through needle valve 32 from channel 21—30 into channel 35—26, applying the hydrostatic pressure of the column of liquid in the borehole to the upper surface of piston 25. At the same time, channel 27—36 is opened by needle valve 37 into low pressure tank 54 via channel 56, chamber 49, port 53 and open solenoid valve 51. Thus the oil beneath piston 25 may drain into tank 54. Accordingly, piston head 25 will be driven downwardly, supplying the desired power to the equipment connected to piston rod 28.

When piston 25 has reached substantially the end of its downward stroke, knob 67 on rod 28 opens switch 64, breaking circuit 62, and causing solenoid valve 51 to close port 53. Further pressure on the top of piston 25 increases the pressure in chamber 49 above piston 43, forcing the latter downwardly and closing needle valves 32 and 37, thereby stopping further pressure above piston 25 and further drainage from beneath said piston.

The operator at the surface will be appraised of the fact that the downward stroke of piston 25 is completed by noting the discontinuance of current flow through ammeter 68. The operator may then connect switch 66 to conductor 61, opening solenoid valve 50, thereby opening needle valves 31 and 39. The high pressure oil from chamber 18 may now pass freely through needle valve 31 from channel 21—29 into channel 33—27, applying the hydrostatic pressure of the column of liquid in the borehole to the lower surface of piston 25. At the same time, channel 26—38 is opened by needle valve 39 into low pressure tank 54 via channel 55, chamber 49, port 52 and open solenoid valve 50. Thus the oil above piston 25 may drain into tank 54. Accordingly, piston head 25 will be driven upwardly, and thus the previous operation is repeated, with piston 25 completing an upward stroke in the same manner as the downward stroke. This reciprocating action may be repeated until the pressure in low pressure tank 54 is increased to a point where the pressure differential between tank 54 and chamber 18 is no longer sufficient to operate piston 25.

It should be noted that control apparatus 15 permits the stopping, continuing or reversing of the stroke of piston 25 at any intermediate position of said piston. Also, all the power necessary to operate control apparatus 15 is supplied by the high pressure source, except that required to operate solenoid valves 50 and 51.

It will be understood that the invention is subject to numerous modifications, within the scope of the appended claims, and thus the claims are not to be limited by the typical embodiment disclosed herein.

I claim:

1. Borehole apparatus comprising a housing adapted to be passed through a borehole containing a column of liquid, a fluid chamber in said housing, means for applying the hydrostatic pressure of said column of liquid to the fluid in said chamber, a tank in said housing filled with a low pressure fluid, a cylinder in said housing containing a piston, first valve means in a first channel connecting said chamber to said cylinder on one side of said piston, second valve means in a second channel connecting said tank to said cylinder on the other side of said piston, third valve means in a third channel connecting said chamber to said cylinder on said other side of said piston, fourth valve means in a fourth channel connecting said tank to said cylinder on said one side of said piston, means for opening and closing said first and second valve means simultaneously, and means for opening and closing said third and fourth valve means simultaneously.

2. Borehole apparatus comprising a housing adapted to be passed through a borehole containing a column of liquid, a fluid chamber in said housing, means for applying the hydrostatic pressure of said column of liquid to the fluid in said chamber, a tank in said housing filled with a low pressure fluid, a cylinder in said housing containing a piston, first valve means in a first channel connecting said chamber to said cylinder on one side of said piston, second valve means in a second channel connecting said tank to said cylinder on the other side of said piston, third valve means in a third channel connecting said chamber to said cylinder on said other side of said piston, fourth valve means in a fourth channel connecting said tank to said cylinder on said one side of said piston, means normally biasing said first, second, third, and fourth valves in the open position, controllable means in said second channel for selectively applying and releasing the pressure therein to said first and second valve means for closing and opening said first and second valve means, and controllable means in said fourth channel for selec-

tively applying and releasing the pressure therein to said third and fourth valve means.

3. Borehole apparatus comprising a housing adapted to be passed through a borehole containing a column of liquid, a fluid chamber in said housing, means for applying the hydrostatic pressure of said column of liquid to the fluid in said chamber, a tank in said housing filled with a low pressure fluid, a cylinder in said housing containing a piston, first valve means in a first channel connecting said chamber to said cylinder on one side of said piston, second valve means in a second channel connecting said tank to said cylinder on the other side of said piston, third valve means in a third channel connecting said chamber to said cylinder on said other side of said piston, fourth valve means in a fourth channel connecting said tank to said cylinder on said one side of said piston, means for applying the difference in pressure between the

fluid in said channels and the fluid in said tank across said valve means whereby said valve means tend to remain open, controllable means in said second channel for selectively applying and releasing the pressure therein to said first and second valve means for closing and opening said first and second valve means, and controllable means in said fourth channel for selectively applying and releasing the pressure therein to said third and fourth valve means.

References Cited in the file of this patent

UNITED STATES PATENTS

1,777,128	Powell	Sept. 30, 1930
2,569,881	Davies	Oct. 2, 1951
2,640,542	Brown et al.	June 2, 1953
2,657,673	Littlefield	Nov. 3, 1953