Sept. 25, 1956 E. BILLETER 2,763,888

DOOR-CLOSING MECHANISM

Filed Feb. 20, 1951 4 Sheets-Sheet 1

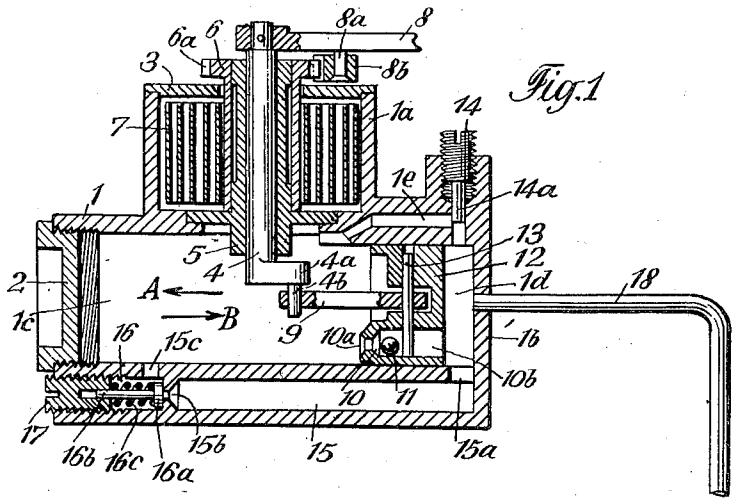

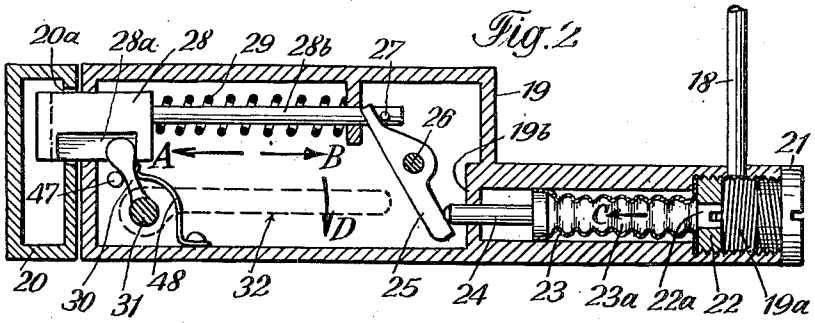

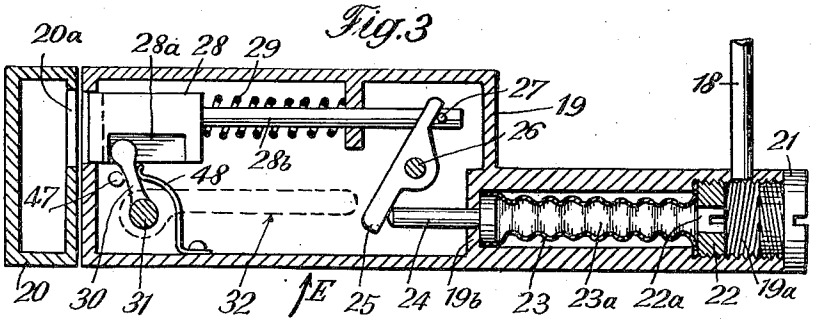

INVENTOR:
Ernst Billeter,
By
Attorney

DOOR-CLOSING MECHANISM

Filed Feb. 20, 1951 4 Sheets-Sheet 2

Fig. 4

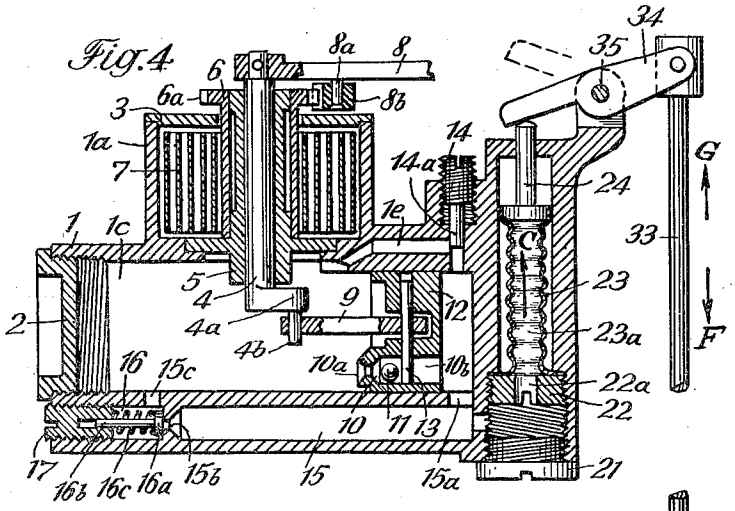

Fig. 5

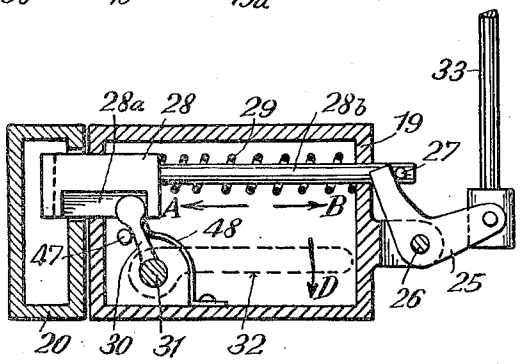

Fig. 6

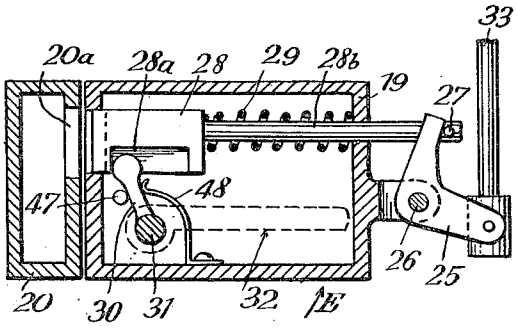

INVENTOR:
Ernst Billeter,
By
Attorney

DOOR-CLOSING MECHANISM

Filed Feb. 20, 1951 4 Sheets-Sheet 3

Fig. 7

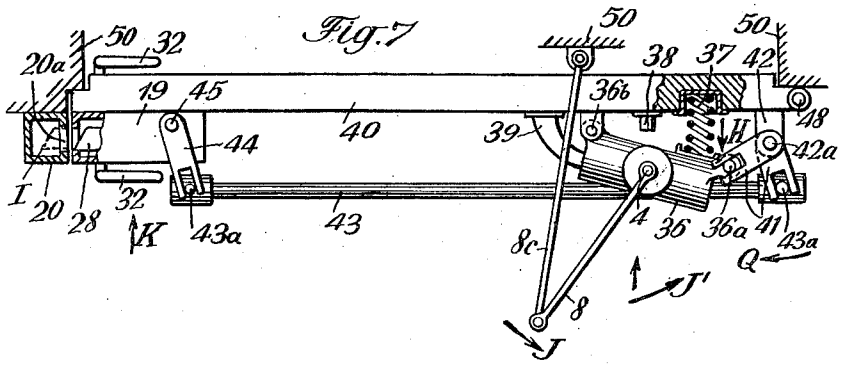

Fig. 8

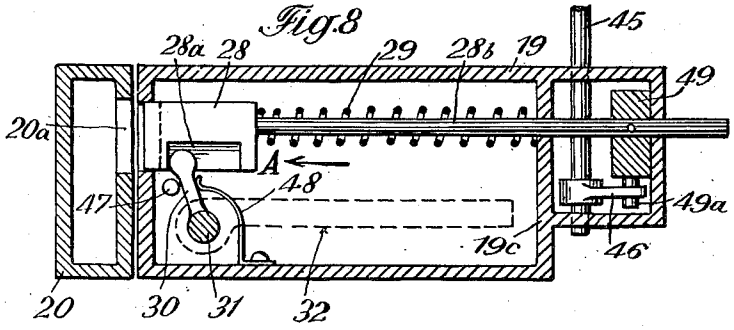

Fig. 9

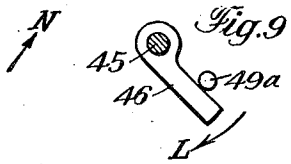

Fig. 10

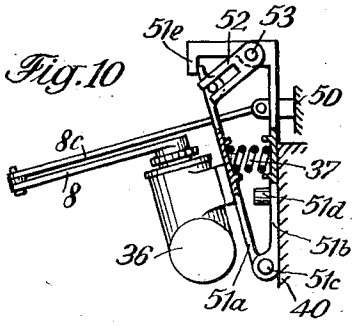

INVENTOR:
Ernst Billeter,
By
Attorney

DOOR-CLOSING MECHANISM

Filed Feb. 20, 1951 4 Sheets-Sheet 4

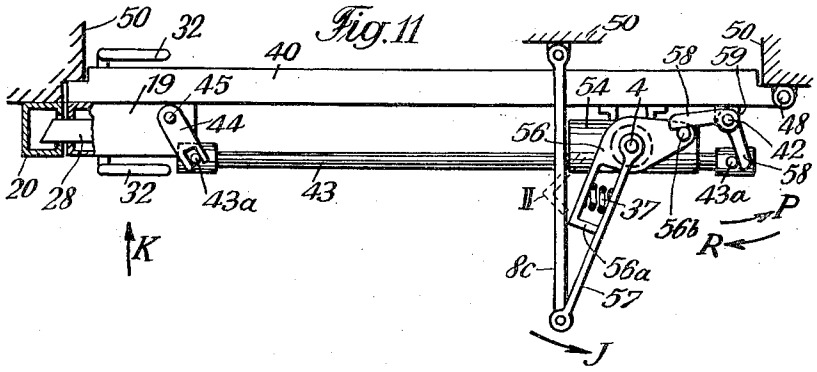

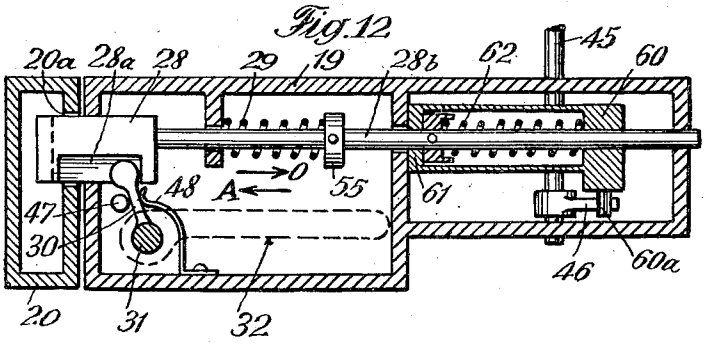

INVENTOR:
Ernst Billeter

By

Attorney

United States Patent Office

2,763,888

Patented Sept. 25, 1956

1

2,763,888

DOOR-CLOSING MECHANISM

Ernst Billeter, Kusnacht, Switzerland

Application February 20, 1951, Serial No. 211,874

4 Claims. (Cl. 16—59)

Doors shut by means of conventional closers are substantially accelerated immediately prior to being shut, in order to better overcome the resistance of the lock latch bolt and to shut the door entirely by shooting out the latch. Such final acceleration of the door, however, has the great disadvantage of giving rise to substantial noise.

My present invention is characterised by means which act on the latch of the door lock and are acted on by a door closer through transmission means. The arrangement is such that before the door has been entirely shut, the former means are in their inoperative position and are moved to their operative position only when the door has been shut, thus affording a quiet door closing operation.

Five forms of invention are schematically shown on the accompanying drawings in which:

Figs. 1 and 2 show a first form in longitudinal section through a door closer and a door lock respectively, the door being entirely shut,

Fig. 3 is a longitudinal section through the door lock, the latch having been withdrawn,

Figs. 4 and 5 show a second form in sections similar to Figs. 1 and 2,

Fig. 6 is a section similar to Fig. 3, but through the second form,

Fig. 7 shows a third form in plan view,

Fig. 8 is a longitudinal section through the door lock seen in direction of the arrow K in Fig. 7, but in a much larger scale, the latch having been withdrawn,

Fig. 9 shows a detail of Fig. 8,

Fig. 10 is a fourth form and shows an end view of the door closer secured to the door,

Fig. 11 is a plan view of a fifth form,

Fig. 12 is a longitudinal section through the door lock of Fig. 11 in a much larger scale and seen in direction of the arrow K in Fig. 11, the latch bolt having been shot out, and

Fig. 13 is a detail of Fig. 12.

In the first form (Figs. 1–3), the door-closing mechanism comprises a checking cylinder **1** of which the two end faces are closed by the wall **1***b* and the screw cover **2** respectively. The spring housing or barrel **1***a* is disposed adjacent to cylinder **1** at right angles to the longitudinal axis thereof, and is tightly closed by means of a collar bush **5** towards the front chamber **1***c* of cylinder **1**, whilst the barrel endface is closed by a cover **3**. A crank axle **4** is rotatably mounted in the collar bearing **5**. A packing (not shown) is provided between axle **4** and collar bearing **5**. A spring catch **6** having a gear rim **6***a* is rotatably mounted on bush **5**. The closing spring **7** is disposed in barrel **1***a*, one end of the spring is anchored in the catch **6** and the other end in the wall of barrel **1***a*. On the end of crank axle **4** projecting above the bush **5** is affixed the arm **8** to which is affixed a pin **8***a*. On the latter is pivoted a pawl **8***b* which engages the gear rim **6***a*. The arm **8** is pivoted to a link (not shown) which in turn is pivoted to the door frame. The crank-axle end projecting into the front chamber **1***c* of

2

the checking cylinder **1** is formed with a crank arm **4***a* with a crank pin **4***b* on which the connecting rod **9** is pivoted. The other end of the latter is pivoted on a wrist pin **13** to the checking piston **12**. The latter comprises a ball valve **10** consisting of a ball **11**, the front valve port **10***a* and the rear valve port **10***b*. In order to prevent the ball **11** from rolling out through the rear valve port **10***b*, the latter is partly barred by the wrist pin **13**. The rear chamber **1***d* is connected to the front chamber **1***c* through a control port **1***e* through which the flow of fluid, as required, may be increased or decreased by a throttle element **14** having a stem **14***a*. The rear chamber **1***d* is connected to the front chamber **1***c* through a further rear chamber port **15***a*, the connecting duct **15**, the valve port **15***b* and the front chamber port **15***c*. In Fig. 1, the valve port **15***b* is closed by the valve plate **16***a* of the valve **16**. The valve plate **16***a* is integral with the valve stem **16***b* which at its other end is slidable in the tight-fitting plug **17**. A valve spring **16***c* is coiled around the valve stem **16***b* between plug **17** and valve plate **16***a* and urges the latter against the valve port **15***b* to close same.

In the endwall **1***b* a pipe **18** is tightly inserted, of which the other end is tightly inserted in the lock case **19** (Fig. 2) and opens into the pressure chamber **19***a*. The latter is tightly closed by a plug **21** on one side and at the other end by a resilient corrugated tube **23** which through a plug **22** having a port **22***a* is clamped against its seat in lock case **19**. The other end of tube **23** carries a pin **24** which in the partition **19***b* is guided longitudinally and the free end of which contacts the lever **25**. The latter is pivoted on a pin **26** to the lock case **19**, and its other end contacts a follower stud **27** affixed to the latch bolt **28***b*. The latter forms the extension of the latch **28** which, as well as its bolt, is guided longitudinally in the lock case **19**, a spring **29** being coiled about the latch bolt **28***b* intermediate these two points of bearing to exert a force on the latch in direction of the arrow A. In the position shown, the latch **28** projects through the aperture **20***a* into the striking plate **20** and, thus, is shown in the operative position. The latch **28** has a lateral recess **28***a* in which is engaged a follower **30** rigidly secured to the handle spindle **31** which is rotatably mounted in the lock case **19**. The spindle **31** is rotatable together with the door handle **32** which is rigidly secured thereto. The follower **30** of handle **32** in the non-operative position shown, is urged against the stop **47** through the action of a spring **48** and thus held horizontal, in a direction opposite to the arrow D.

The door closer shown in Fig. 1 and the lock case shown in Fig. 2 are rigidly secured to the door, whilst the striking plate **20** is affixed to the door frame. The entire hollow space in the door closer **1**, the tube **18**, and the corrugated tube **23** are filled with a liquid, e. g. oil. The closing spring **7** is so designed that the liquid pressure arising in the corrugated tube **23**, when closing the door, is sufficient to expand the tube **23** in direction of the arrow C against the action of the latch spring **29** on the lever **25**, whereby the latch **28** is moved in direction of the arrow B. The liquid pressure produced solely by the closing spring **7** on the valve plate **16***a*, is not sufficient to push the latter away from the valve port **15***b*, To accomplish such latter action, a force additional to that of spring **7** has to be exerted, e. g. in that the person passing through the door closes the latter.

Fig. 3 is similar to Fig. 2, but the latch **28** is retracted from the striking plate **20**, i. e. the latch **28** is disengaged. The form of invention shown in Figs. 4–6 differs from that shown in Figs. 1–3 in that the corrugated tube **23** is not disposed in the lock case, but is incorporated in the door closer. The longitudinal expansion of the tube **23**, resulting from the liquid pressure acting on its inside, is

transmitted to the latch **28** through a lever **34** pivoted at 35 and through a rigging **33**.

The third form of invention shown in Fig. 7 differs from those shown in Figs. 1–3 and 4–6 in that the force for actuating the latch **28** is produced mechanically and not hydraulically. Fig. 7 shows a top plan view of a door closer **36**, which may comprise a structure such as shown in Figures 1 and 4, pivoted on a pin **36*b*** to a door **40**, in a position when the door is automatically closed by the closer, in the very moment when the door **40** has been entirely closed on its hinges **48** in the jamb **50**, but has not been latched yet. In this position, the door closer **36** through one endface abuts against the stop **39**, and the follower **36*a*** secured to the other endface is engaged in the slot of one leg of a bell-crank **41**, whilst in the slot of the other leg is engaged a follower pin **43*a*** of a rod **43**. The bell crank **41** is pivoted on a pin **42*a*** to a bracket **42** which is affixed to the door. A helical spring **37** is disposed between door **40** and door closer **36** and acts on the latter in direction of the arrow H. The other end of rod **43** has a second follower pin **43*a*** affixed thereto, which is engaged in the slot of an arm **44** affixed to the transmission axle **45** and is rotatable therewith. The axle **45** at its other end is rotatably mounted in the lock case **19** (Fig. 8) and has an arm **46** affixed thereto. In Fig. 7 the latch **28** is retracted into the lock case **19**, as shown by the full lines, and is shown in its shot position I (dash lines) in the striking plate **20**. The latch **28** is movable through the two door handles **32** in known manner.

Fig. 8, being a longitudinal section through the entire lock case and striking plate **20** as seen in direction of the arrow K in Fig. 7, shows a follower **49** affixed to the latch bolt **28*b*** and having a stud **49*a***. Between the latch **28** and a partition **19*c*** a spring **29** is coiled about the latch bolt **28*b*** and acts on the latch **28** in direction of the arrow A to urge the latch into the striking plate **20**.

In Fig. 9, the arm **46** is shown in one of its terminal positions in which it abuts against the pin **49*a***. When the arm **46** is turned in direction of the arrow L, the latch **28**, **28*b*** is moved in the direction of the arrow A (Fig. 8) by the action of the latch spring **29** and spindle spring **48**, the latch being shot through the aperture **20*a*** into the striking plate **20**. The resultant of the force of spring **37** (Fig. 7) and that of the spring **29**, in the direction of arrow H (Fig. 7), is smaller than the force produced by the closing spring in door closer **36** in opposition to the direction of arrow H. The door closer in the position shown in Fig. 7, therefore, swings on pin **36*b*** in the direction of arrow J against stop **38**, the latch at the same time being shot from the lock case **19** through aperture **20*a*** into the striking plate **20**, the door thus being latched in its closed position.

In Fig. 10 a further form of invention is shown, which differs from that shown in Fig. 7 in that the door closer **36** on the door is rotatable, relatively to the latter, not in a horizontal plane, but in a vertical plane. For such purpose, the closer **36** is affixed to a plate **51*a*** which is pivoted on a pin **51*c*** to the door plate **51*b***. The said plate **51*a*** may swing through an arc limited by the two stops **51*d*** and **51*e***. In the door plate **51*b*** a swing arm **52** is rigidly secured to the transmission axle **53**. The arm **52** is rotated when the plate **51*a*** is moved. These swiveling movements of the door closer **36** are transmitted onto the latch **28** of the latching means shown in Fig. 8, whereby the latter may be positioned as shown in Fig. 8. Such transmission is effected by similar linkage means as shown in Figs. 7 and 8, the transmission axle **53** actuating bell crank lever **41**, rod **43**, lever **44** and axle **45**. The spring **37** (Fig. 10) is inserted between the closer **36** and the door **40**, and acts on the door and door closer just as in Fig. 7.

In Fig. 11 is shown a fifth example which differs from those shown in Figs. 1 and 4 in that the latch **28** is actuated by mechanical means, and not by hydraulic means. Fig. 11 shows a plan view of a door closer **54**, which may comprise a structure such as shown in Figures 1 and 4, affixed to a door **40**, and a shot latch bolt **28**, i. e. the door **40** is shut on its hinges **48** in the door jamb **50**. A bell crank **58** is pivoted to a bracket **59** which is affixed to the door **40**. One leg of the bell crank contacts the follower pin **43*a*** which is affixed to the rod **43**, and the other leg contacts the follower pin **56*b*** of a second bell crank lever **56** which is rigidly secured to the crank axle **4**. The lever **56** at its other end forms an abutment **56*a*** which in the position shown in Fig. 11 abuts against an arm **57** which is pivoted on the crank axle **4**. Intermediate the fixed bell crank **56** and the freely swinging arm **57** is inserted a spring **37** which, in the position shown in Fig. 11, is compressed in direction of the arrow J by the action of the door-closer spring, until the stop **56*a*** abuts against the arm **57**.

The other end of the transmission rod **43** has a further follower pin **43*a*** which is engaged in a slot of the arm **44** which is rigidly fixed on the transmission axle **45**. The latter at its other end is rotatably mounted in the lock case **19**, as shown in Fig. 12, and has an arm **46** affixed thereto.

The spring **37** is capable to overcome, when the door is open, the turning resistance of the door acting on the arm **57** and slightly advances the latter with respect to the fixed bell crank **56** in the closing direction of the door.

Fig. 12 shows a vertical section, as seen in the direction of the arrow K in Fig. 11, through the lock case **19** and the striking plate **20** in a larger scale. This construction differs from that shown in Fig. 8 in that the latch **28** is engaged in the striking plate **20** on the door frame **50** and, thus, in its operative position locks the striking plate and lock case together. The latch bolt spring **29** does not act to move the latch **28** into the striking plate, but out of the same in direction of the arrow O. The latch **28** is moved in direction of the arrow A into the locked position shown in Fig. 12, by virtue of the greater force of the closing spring in the door closer **54**, in opposition to the action of spring **37** in Fig. 11 and in opposition to the action of the latch bolt spring **29** which acts in direction of the arrow O. The latch **28** is moved in direction of the arrow A in Fig. 12 by the action of the follower pin **56*b*** of the fixed bell crank **56** onto the bell crank **58**, and from the latter via the rigging **43**, **45** and through the arm **46** moving in the direction of the arrow L, Fig. 13, via the stud **60*a*** onto the spring plate **60**. The force of the auxiliary spring **62** is chosen such that the force of latch spring **29** fails to move the latch **28**, **28*a*** in direction of the arrow O and in opposition to the force of the auxiliary spring **62**. When the bell crank **58** in Fig. 11 swivels in direction of the arrow P, the arm **46** by virtue of the force of latch spring **29** onto the arm **46**, moves in direction of the arrow M in Fig. 13. The longitudinal movement of latch **28** in direction of the arrow O is so chosen that the latch is retracted from its striking plate **20** and into the lock casing **19**.

The mode of operation of the door-closing mechanisms described is as follows.

The door closer of Fig. 1 is affixed to the door in known manner, and its arm **8** is pivoted to a further arm (not shown) which in turn is pivoted to the door jamb. The lock casing **19** also is affixed to the door, whilst the striking plate **20** is affixed to the door jamb. When the door is opened, the checking piston **12** is moved in direction of the arrow A, the liquid in front chamber **1*c*** escaping through the valve ports **10*a***, **10*b*** and the regulating duct **1*e*** into the rear chamber **1*d***. When the door is released, the piston **12** under the action of the closing spring **7** is moved in direction of the arrow B, a corresponding liquid pressure being built up in the rear chamber **1*d***, whereby the corrugated tube **23** is expanded in direction of the arrow C and through its pin **24** turns the lever **25**. The latch bolt **28*b*** thus is moved in direction of the arrow B against the action of the springs **29**, the latch **28** is being moved from its operative position (Fig. 2) into its inoperative position (Fig. 3). Such latter

position is maintained until the door has swung back into the shut position on the door frame. In such shut position, the pressure on the liquid in the corrugated tube **23** and in the rear chamber **1***d* is determined by the force of the latch bolt spring **29** and also that of the tube **23** itself. The liquid return from the rear chamber **1***d* through duct **1***e* into the front chamber **1***c* is governed by the degree of throttling of the duct **1***e*. During such return of the liquid, the latch **28** owing to the action of latch spring **29** is simultaneously moved from the position shown in Fig. 3 to that shown in Fig. 2, in which the door is entirely shut. When the door is pulled shut forcibly, the greater liquid pressure produced thereby causes the override valve **16** to open so that the liquid may flow from the rear chamber **1***d* through the ports of said valve back into the front chamber **1***c*.

The arrangement shown in Figs. 4–6 in its hydraulic portion operates exactly in the same manner as that shown in Figs. 1–3, with the difference that the longitudinal movement caused by the expansion of the corrugated tube inserted in the door closer, is mechanically transmitted onto the latch **28**, instead of hydraulically as in the first example shown in Figs. 1–3.

In the third example shown in Figs. 7–9, the force for actuating the latch is produced and transmitted mechanically. When the door is in the shut and latched position, the latch occupies the position I (Fig. 7) in the striking plate, whilst the door closer **36** abuts against the stop **38**. When the door is opened, the door closer **36** remains in said position. When the door is let go, the arm **8** under the action of the door-closer spring is moved in direction of the arrow J and thus causes the door to be shut. Such movement at the same time is retarded through the action of the checking piston. The force of spring **37** in the position shown in Fig. 7 is so chosen that it is capable to overcome the rotary resistance of the door and the force on the follower **36***a* (Fig. 7) in a sense opposed to the arrow H. The spring **37** after the beginning of the closing movement of the door pushes the latter so far away from the door closer **36** until the latter abuts against the stop **39**. The door closer **36** and the door **40** then occupy the relative position shown in Fig. 7, in which the latch bolt **28**, **28***b* has been retracted into the lock casing **19**. Such position is maintained during the entire closing movement until the shut position shown in Fig. 7 has been reached. In such latter position, the door closer **36** through the action of the closing spring thereof onto the arm **8** is swung in direction of the arrow J′ until the closer **36** again abuts against stop **38**, during which movement the latch **28** has been moved out of the lock casing **19** and into the striking plate.

In the fourth example shown in Fig. 10, the movements of the door closer **36** produce the same movements of the latch bolt as in the third example.

In the fifth form of invention shown in Figs. 11–13, the operation is as follows:

In Fig. 11, the door **40** is shown in its latched position in the door jamb **50**. When the door is opened, the position of the free arm **57** relatively to the fixed bell crank **56**, shown in Fig. 11, remains intact. The arm **57**, together with its follower **56***b*, moves away from that leg of bell crank **58** which contacts it, whereby the latter, through the action of latch bolt spring **29** in direction of the arrow O, has been swung in direction of the arrow P, and at the same time the latch **28** has been retracted from the striking plate **20** into the lock casing **19**. When the door is let go, the fixed bell crank **56** under the action of the closing spring of the door closer, swings in direction of the arrow J. Such movement of bell crank **56**, however, is retarded. The force of spring **37** is of such magnitude that it overcomes the turning resistance acting on the free arm **57** whereby the latter through spring **37** is swung away from the stop **56***a*. The free arm **57** and the fixed bell crank **56**, which is shown in the position II in Fig. 11, occupy relatively to each other the angular position shown, which position is maintained during the entire closing movement of the door, until the latter has reached its shut position in the door frame. In such latter position, the fixed bell crank **56** under the action of the door-closer spring swings from the position II in Fig. 11 in direction of the arrow J until the stop **56***a* abuts against the free arm **57**. By reason of such turning movement of th fixed bell crank **56**, the bell crank **58** thrrough stop **56***b* has been swung in direction of the arrow R, whereby the latch bolt through the transmission means is shot into the striking plate **20** against the action of the latch-bolt spring **29**, whereby the door has been latched.

The forms of invention described also may be used for such elevator doors, namely in such manner that the counter-element of the said movable latch bolt is movably inserted in the door and, thus, becomes a latch which, in accordance with the present invention, is so controlled that the elevator door is moved to its shut position with its latch disengaged from said latch bolt, and the latter only in this position is pushed back by the latch through the door closing arrangement, whereby the elevator again is ready for operation. The door-closing mechanism, therefore, also is applicable to elevator doors to ensure a noiseless closing thereof.

Although the foregoing description refers to hydraulic operation of some modifications of the mechanism, it will be appreciated that any fluid operation, such as pneumatic operation, may be employed.

In the forms of invention shown and described, door closers have been assumed which mostly are secured to the door and door jamb. The same closing operation also may be accomplished with the aid of door closers disposed on the floor or closers which engage the door only during the end-portion of its closing movement.

Aside from the types of transmission of forces and movements from the door closer onto the latch means, illustrated with the aid of the five forms of invention described, it is feasible to transmit said forces and movements by pneumatic or cable means. Such cable means are particularly suitable for the last four forms of invention.

What I claim as new and desire to secure by Letters Patent, is:

1. A door-closing mechanism comprising a door-closer unit, means for mounting said unit on a door, a door lock including a latch bolt and spring means biasing said bolt into locking position, mechanical transmission means interconnecting said door-closer unit and said latch bolt and operative to retract said bolt while the door is open, said door closer unit including a closing spring, and an auxiliary spring operatively interposed between said transmission means and said door to impart a limited closing movement to the door and supplement said closing spring, said door-closer unit being pivoted to the door to move relatively thereto under spring action.

2. A door closing mechanism comprising a door closer unit, means for mounting said unit on a door, a door lock including a latch bolt and spring means biasing said bolt into locking position, mechanical transmission means interconnecting said door closer unit and said latch bolt and operative to retract said bolt while the door is open, said door closer unit including a closing spring, and an auxiliary spring operatively interposed between said transmission means and said door to impart a limited closing movement to the door upon reversal of the door movement from opening to closing direction, said auxiliary spring acting on said transmission means to maintain said latch bolt in retracted position during the entire closing stroke of the door, while when the door arrives in its position of closure, said closing spring acting against the auxiliary spring causes operation of said transmission means to close the latch bolt.

3. A door-closing mechanism as set out in claim 1, in

which the door-closer unit is adapted to swing in a horizontal plane.

4. A door-closing mechanism as set out in claim 1, in which the door-closer unit is adapted to swing in a vertical plane.

References Cited in the file of this patent

UNITED STATES PATENTS

1,920,868 Kirk ---------- Aug. 1, 1933

FOREIGN PATENTS

372,620 Germany ---------- Mar. 31, 1923