July 31, 1956 B. MAILLARD 2,756,637

CARTRIDGE MAGAZINES FOR AUTOMATIC FIREARMS

Filed Feb. 1, 1952 3 Sheets-Sheet 1

Fig. 1.

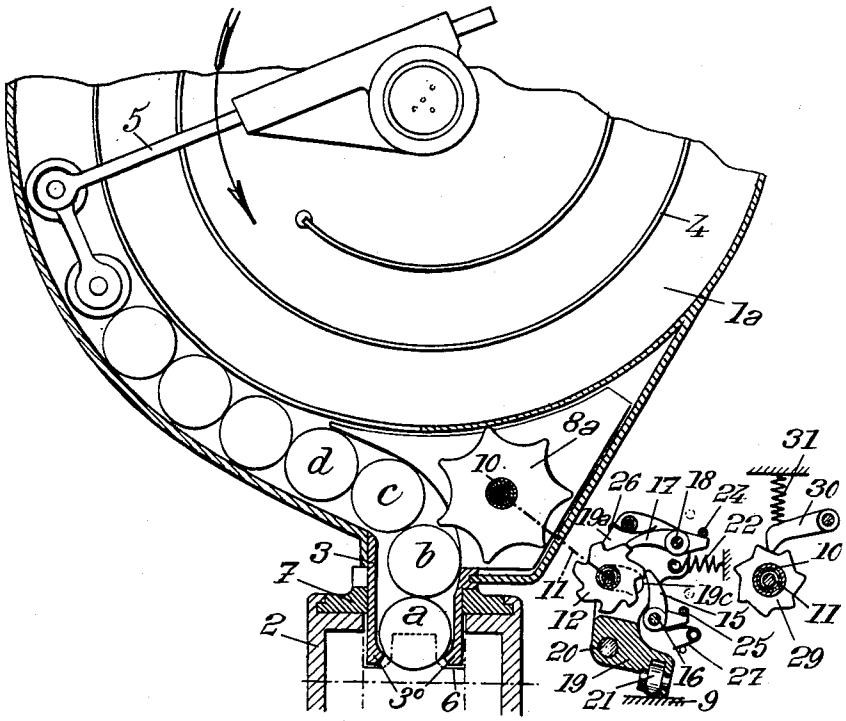

Fig. 1a

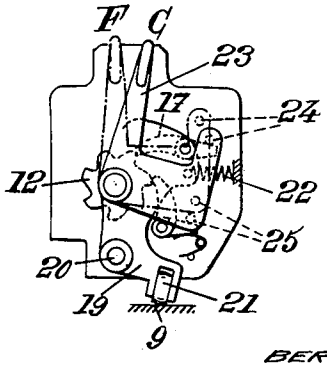

INVENTOR
BERNARD MAILLARD,

BY

Robert B. Larson

ATTORNEY

CARTRIDGE MAGAZINES FOR AUTOMATIC FIREARMS

Filed Feb. 1, 1952 3 Sheets-Sheet 2

Fig. 2.

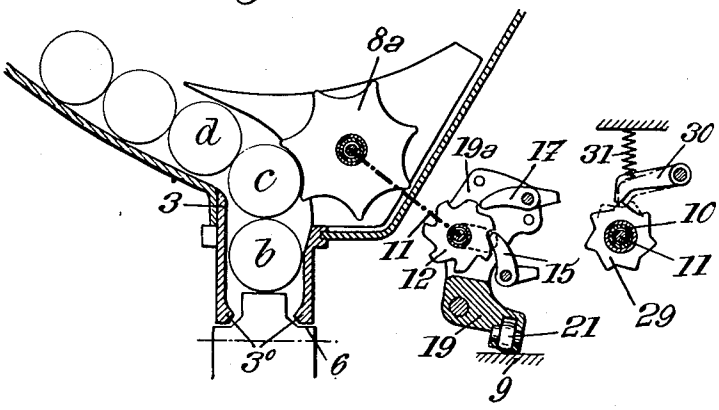

Fig. 3.

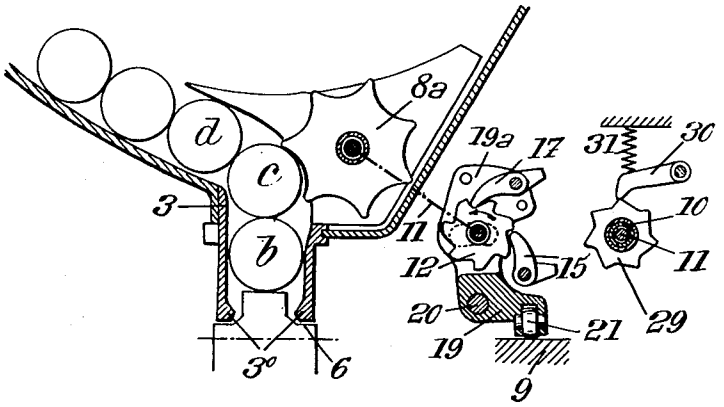

Fig. 4.

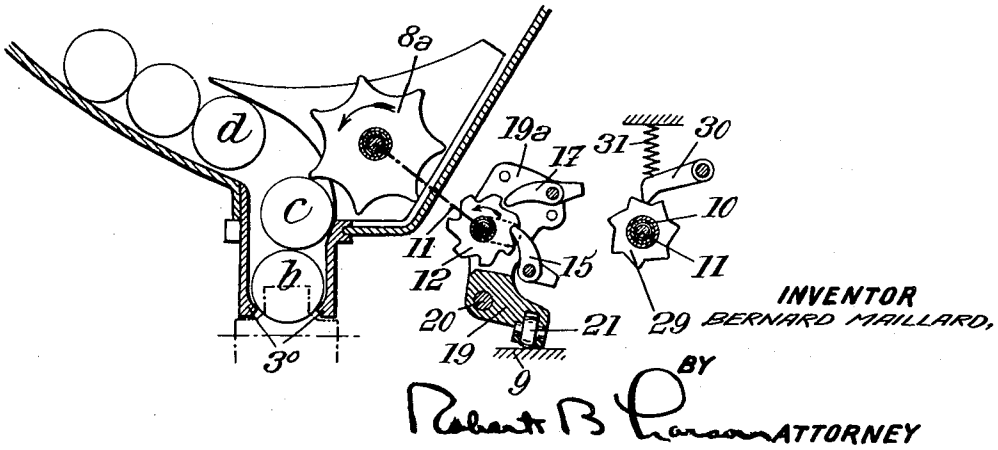

CARTRIDGE MAGAZINES FOR AUTOMATIC FIREARMS

Filed Feb. 1, 1952 3 Sheets-Sheet 3

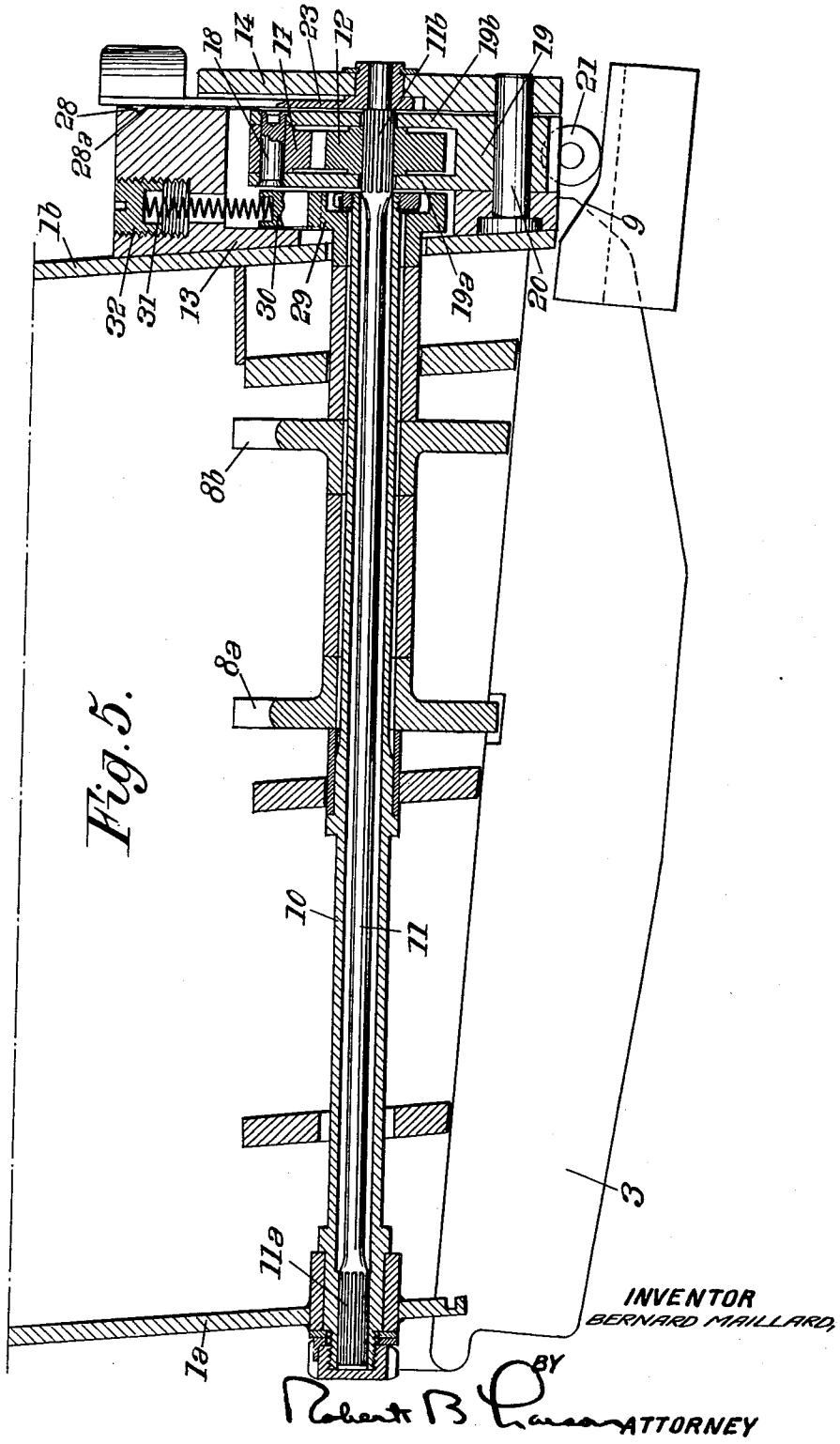

United States Patent Office

2,756,637

Patented July 31, 1956

1

2,756,637

CARTRIDGE MAGAZINES FOR AUTOMATIC FIREARMS

Bernard Maillard, Geneva, Switzerland, assignor to Society "Brevets Aero-Mecaniques," S. A., Geneva, Switzerland, a society of Switzerland

Application February 1, 1952, Serial No. 269,416

Claims priority, application Luxembourg February 17, 1951

4 Claims. (Cl. 89—33)

The present invention relates to cartridge magazines for automatic firearms, and more especially to magazines for firearms having a high rate of fire, for instance a rate of fire of at least 850–900 shots per minute for a 20 mm. caliber firearm.

The object of my invention is to provide a cartridge magazine of this kind which is better adapted than those existing at the present time to meet the requirements of practice.

It is known that a magazine such as above referred to, in which cartridges are disposed behind one another to form at least one line or file, are provided with a feed mechanism which constantly urges the line or file of cartridges toward the outlet of the magazine. As a rule this feed mechanism is actuated by a spring or the like which is wound up when the cartridges are introduced into the magazine for loading it.

Now, it will be readily understood that, at high rates of fire (for instance 850–900 shots per minute and more), the time available for driving the first cartridge of the line or file present in the magazine from waiting position (where it rests upon the upper edge of the breech block) into introduction position is extremely short. This cartridge must therefore be given a very high acceleration to give it the desired displacement within this short time.

If all the cartridges of the line or file present in the magazine are moved simultaneously, this high acceleration is to be imparted by the feed mechanism above referred to to the relatively considerable mass constituted by the whole of these cartridges. Practically, for high rates of fire as above mentioned, this is impossible because:

a.—the spring of the feed mechanism would have to be too powerful, i. e. too heavy and too voluminous;

b.—under the effect of this powerful spring, the frictional stresses developed between the cartridges and the guiding surfaces of the magazine would be very high; and

c.—the pressure exerted by the first cartridge on the breech block as it is moving rearwardly would be very high and would result in a braking of the movement of said breech block.

In order to obviate these drawbacks, according to my invention, I make use of a portion of the recoil energy developed in the firearm every time a shot is fired to actuate a supplementary feed mechanism located along the line or file of cartridges in the magazine close to the outlet thereof, this supplementary feed mechanism being arranged to operate independently of the main feed mechanism to give the cartridge or cartridges located downstream of said supplementary mechanism an acceleration with respect to the remainder of said line or file of cartridges during the very short time for which the first cartridge is to pass into the firearm, the main feed mechanism subsequently causing said remainder of the line or file of cartridges to make up for their relative lagging.

Thus I impart the desired acceleration to the first cartridge, which requires it, without having to supply too much energy, since the main feed mechanism, which drives

2

most of the cartridges present in the magazine, has a much longer time available to exert its action, practically most of the time interval between two successive shots. On the other hand, the acceleration imparted to the first cartridge of the line or file has the correct value, exactly the same for all the successive shots fired with a given magazine.

A preferred embodiment of my invention will be hereinafter described with reference to the accompanying drawings, given merely by way of example, and in which:

Fig. 1 is a diagrammatic sectional view of a cartridge magazine made according to my invention;

Fig. 1*a* separately shows, in diagrammatic fashion, some elements of the magazine of Fig. 1;

Figs. 2, 3 and 4 are views, similar to Fig. 1, showing different relative positions of the parts of the magazine and its feed mechanisms;

Fig. 5 is a sectional view at right angles to that of Fig. 1 and on an enlarged scale.

The drum magazine shown by the drawing includes, in conventional fashion, two side plates **1***a* and **1***b* interconnected, at their lower parts (the magazine is supposed to be mounted above the breech casing **2** of the fire arm) by a piece **3** forming an introduction passage and engaging into said breech casing, this passage being provided at the bottom with two inwardly projecting edges 3° on which the first cartridge of the line or file present in the magazine rests, in introduction position, as shown by Figs. 1 and 4, to be caught by breech block **6**.

Spiral ribs **4** carried by the inner faces of side plates **1***a* and **1***b* cooperate with the ends of the cartridges for guiding them toward said introduction passage.

A spring operated main feed mechanism constantly urges the cartridges toward the outlet of the magazine.

This feed magazine is constituted for instance by a spiral spring (not shown) acting upon a rotary telescopic arm **5** the end of which pushes the last cartridge of the line or file of cartridges toward the outlet of the magazine. This driving spring is automatically wound up when the cartridges are successively driven into the magazine for loading it.

A supplementary feed mechanism acts, through toothed wheels **8***a*, **8***b*, located close to the introduction passage **3** on the two first cartridges of the line or file of cartridges to accelerate these two first cartridges when the first cartridge is to be moved from waiting into introduction position. These two wheels **8***a*, **8***b*, are arranged in line with each other, with their common axis parallel to the axes of the cartridges in the magazine. They are operated, independently of the main feed mechanism, by a portion of the energy developed, every time a shot is fired, under the effect of the recoil of, for instance, an element of the breech mechanism, but preferably of the whole of the firearm itself (when said firearm is movable in its support) against the action of a spring, with respect to a magazine carrier **7** along which the breech casing **2** is slidable.

With such an arrangement, only the two cartridges located downstream of the supplementary feed means **8***a*, **8***b* (i. e. between said wheels **8***a*, **8***b* and the outlet 3° of the magazine) have to be given the high acceleration necessary to move, in an extremely short time, the first cartridge from waiting position into introduction position. Since the total mass of these two cartridges is relatively small, the force corresponding to this acceleration need not be too great and can be supplied by the recoil energy. As for the other cartridges in line in the magazine, they follow at a lower speed and in a much less jerky way since they dispose, to make their forward movement, of a much longer time, i. e. the interval between two shots.

Thus, according to my invention, the feed to the fire-

arm of the first cartridge in the magazine is controlled by a mechanism which performs always the same cycle of operations for every shot that is being fired, under the effect of an energy supplied by the firearm itself, so that the drawbacks inherent in the use for this purpose of an extraneous energy, such as that of a spring wound up in advance to unwind gradually as the successive shots of the magazine are being fired, are avoided. These drawbacks include for instance the considerable weight and volume of such a spring, its unreliability, etc.

Advantageously, according to another feature of my invention, the recoil energy which actuates the supplemenetary feed mechanism on every cycle of operation thereof is stored up in an elastic energy accumulator which receives this energy during a substantial portion of every period of operation of the firearm (this period being equal to the time interval between two successive shots) and gives it back during the very short time available for introduction of a cartridge into the firearm.

In the embodiment of my invention shown by the drawing, the wheels **8***a* and **8***b* of the supplementary feed mechanism are keyed on a hollow shaft **10** journalled in the side plates **1***a* and **1***b* of the magazine. A torsion bar **11** (diagrammatically represented by a dot-and-dash line on Figs. 1 to 4) has one end thereof fixed by means of splines **11***a* to one end of said shaft **10**. The other end of this torsion bar **11** is fixed by means of splines **11***b* to the toothed wheel **12** of a ratchet drive mechanism mounted on the outside of the magazine, for instance between two side plates **13** and **14** fixed to the rear side plate **1***b* of said magazine.

Torsion bar **11**, in combination with hollow shaft **10** (which, insofar as it is also twisted, constitutes a torsion element) form the elastic energy accumulator above referred to.

The ratchet drive mechanism includes, in combination with ratchet wheel **12**, a holding pawl **15** the pivot spindle **16** of which is mounted between side plates **13** and **14** and a driving pawl **17** the pivot spindle **18** of which is mounted between the branches **19***a* and **19***b* of a double lever **19** pivoted about a spindle **20** extending between side plates 13 and **14**, a slot **19***c* being provided in lever **19** to enable the end **11***b* of torsion bar **11** to pass through said lever.

Double lever **19** carries a roller **21** adapted to cooperate with a cam surface **9** belonging to a piece rigid with the breech casing of the firearm. This roller **21** is so located that when it runs up the slope of this surface **9**, it causes lever **19** to pivot about spindle **20** in anti-clockwise direction against the action of an antagonistic spring **22** interposed between said lever **19** and a fixed point of the magazine casing.

Wheels **8***a* and **8***b* must be disconnected from torsion bar **11** and ratchet wheel **12** when the cartridges are being introduced into the magazine for the loading thereof. This result is obtained by means of a disconnecting piece **23** pivoted freely in coaxial relation with the right hand end (Fig. 5) of torsion bar **11**, between side plate **14** and the branch **19***b* of lever **19**. Piece **23** carries two pins **24** and **25** intended to cooperate respectively with driving pawl **17** and holding pawl **15** respectively, when said piece **23** is in the position shown in solid lines in Fig. 1*a*. In this position, driving pawl **17** and holding pawl **15** are retracted (i. e. moved out of contact with ratchet wheel **12**), against the action of their respective return springs **26** and **27**, by pins **24** and **25** respectively. This position (in solid lines in Fig. 1*a*) of piece **23**, will be called "loading position" and designated by letter C in Fig. 1*a*. In the other position of piece **23**, shown in dot-and-dash lines in Fig. 1*a* as designated by letter F and called "firing position," pawls are released by pins **24** and **25** and are therefore operative, being applied against ratchet wheel **12** by their respective springs **26** and **27**. Yielding locking means are provided for holding piece **23** in either of these two positions, these means being for instance constituted (Fig. 5) by a projection **28** of piece **23** engaging in either of two recesses provided in a part rigid with side plate **13**, one of these recesses being visible at **28***a*. The elasticity of piece **23** makes it possible to withdraw projection **28** from one or the other of these recesses.

In order to control the positions occupied by wheels **8***a* and **8***b* after they have rotated through the desired angle, I fix on hollow shaft **10** a toothed wheel **29** (the teeth of which advantageously have unequally inclined flanks) subjected to the action of a pawl **30** the end of which is constantly urged against said wheel **29** by a spring **31**, preferably adjustable, for instance by means of a threaded plug **32**.

Such a magazine works as follows:

First, when it is desired to load the magazine by pushing in cartridges through introduction passage **3**, piece **23** is placed in loading position (C in Fig. 1a) so that wheels **8***a* and **8***b* can turn freely. It should be noted that toothed wheel **29** does not interfere with this operation because the slope of its teeth enables it to rotate in both directions.

Once this operation has been performed, the loaded magazine is secured on the firearm, piece **23** being returned into firing position. The first cartridge *a* of the line or file of cartridges present in the magazine is in introduction position (Fig. 1). Roller **21** is not on cam surface **9**. Wheels **8***a* and **8***b* have each a tooth engaged between cartridges *b* and *c*, but their position is not exactly determined because torsion bar **11** is not yet twisted, pawl **30** resting upon the inactive flank of one of the teeth of wheel **29**. Fig. 1 corresponds to the above mentioned positions of the parts, except for pawls **17** and **15** which are shown retracted in this figure.

When the trigger is pulled so as to release breech block **6**, this breech block is driven frontward by its spring and in the course of this movement it catches cartridge *a*, which was in introduction position and drives it into the cartridge chamber of the firearm. As soon as cartridge *a* has thus been caught by the cartridge block, the main feed mechanism of the magazine causes the whole line or file of cartridges present in said magazine to move forward a distance approximately equal to one half of the cartridge diameter toward the outlet. Cartridge *b* thus comes to rest upon the top of breech block **6**, in waiting position, while the next cartridge, to wit *c*, comes into the interval between two teeth of wheel **8***a* (and also of wheel **8***b* which moves together with **8***a*), thus causing wheels **8***a* and **8***b* to rotate through a limited angle. Ratchet wheel **12** is therefore rotated through shaft **10** and torsion bar **11**, and pawls **17** and **15** are engaged against the teeth of said ratchet wheel. Torsion bar **11** is still not twisted. The relative position of the parts is now that shown by Fig. 2.

As soon as the shot (cartridge *a*) is fired, the firearm recoils with respect to its support and roller **21** runs up cam surface **9**, thus causing lever **19** to pivot about its axis **20**. In the course of this movement, pawl **17**, carried by lever **19**, causes ratchet wheel **12** to rotate in the anti-clockwise direction (arrow of Fig. 3). As cartridge *b* is now bearing upon the top of the breech block **6** and thus prevented from moving toward the edges 3° of introduction passage **3**, wheels **8***a* and **8***b* cannot turn, so that torsion bar **11** is twisted as a consequence of the rotation of ratchet wheel **12** with respect to said wheels **8***a*—**8***b*. Holding pawl **15** has got past a tooth of ratchet wheel **12** in the course of this rotation thereof, so that this wheel is now prevented from moving backward, even when, due to the subsequent frontward return movement of the firearm, roller **21** runs down cam surface **9**. Torsion bar **11** will therefore now remain twisted as long as cartridges *b* and *c* are not allowed to proceed toward the outlet 3°. However, these cartridges are strongly urged in this direction by wheels **8***a* and **8***b* subjected to the reaction of torsion

bar **11**. This corresponds to the relative position of the parts illustrated by Fig. 3.

When breech block **6** has moved sufficiently backward to allow cartridge *b* to pass from waiting position to introduction position, torsion bar **11** untwists, thus imparting a sudden rotation movement to wheels **8***a* and **8***b* in the anti-clockwise direction (indicated by the arrow of of Fig. 4) and cartridges *b* and *c*, suddenly accelerated toward the magazine outlet, are moved quicker than the remainder of the file or line of cartridges, which follow at a slower rate under the action of the main feed mechanism. At the end of this release movement of torsion bar **11**, this bar is still a little twisted. When the firearm is nearing the end of its frontward return movement, roller **21** is again at the level of the bottom of sloping surface **9** and the corresponding movement of lever **19** has brought driving pawl **17** behind the next tooth of ratchet wheel **12**. This step is illustrated by Fig. 4, which differs from Fig. 1 (corresponding to the position before the first shot is fired) in that torsion bar **11** is still partly twisted.

During its frontward movement, breech block **6** catches cartridge *b* in introductory position so that cartridge *c* can move down into waiting position under the effect of wheels **8***a* and **8***b* urged by torsion bar **11**. These wheels are temporarily stopped by the action of pawl **30** coming against the steep flank of one tooth of wheel **29** (which is rigid with wheels **8***a*—**8***b*. Owing to this temporary stopping of wheels **8***a*—**8***b*, cartridge *d*, moving down together with the other cartridges driven by the main feed mechanism can engage between two teeth of each of said wheels **8***a*—**8***b* without risking to catch the edge of one of said teeth. Once cartridge *d* is thus correctly engaged, the resistance of temporary holding pawl **30** is overcome by the combined actions of the main feed device and of torsion bar **11**, which is still slightly twisted, and wheels **8***a*—**8***b* finally come into the position shown by Fig. 2.

Fig. 1 therefore shows the position existing before the first shot is fired, and the cycle of operation is illustrated by the successive positions of Figs. 2, 3 and 4.

In a general manner, while I have, in the above description, disclosed what I deem to be practical and efficient embodiments of my invention, it should be well understood that I do not wish to be limited thereto as there might be changes made in the arrangement, disposition and form of the parts without departing from the principle of the present invention as comprehended within the scope of the accompanying claims.

What I claim is:

1. In combination with an automatic firearm mounted on a support and including a breech casing reciprocable with respect to said support and a breech block reciprocable in said breech casing, a cartridge magazine adapted to be removably secured to said support and including a casing having an outlet located along the path of reciprocation of said breech block, means in said casing for guiding a file of cartridges toward said outlet, a main feed mechanism carried by said casing for constantly urging the last cartridge of said file toward said outlet, a supplementary feed mechanism comprising a hollow shaft journaled in said casing parallel to said cartridges, two coaxial toothed wheels keyed on

said shaft and located along the path of said file, close to said outlet, to engage the cartridges as they are nearing said outlet and to accelerate the portion of the file of cartridges downstream of said wheels, a cam carried by said breech casing, a lever pivoted to said casing and arranged to run on said cam during a portion of the reciprocating movement of said breech casing, a torsion bar extending coaxially through said hollow shaft and fixed at one end thereto, a ratchet wheel keyed on the other end of said torsion bar, a pawl pivoted to said lever, arranged to cooperate with said ratchet wheel to twist said torsion bar in the direction for which said toothed wheels are urged to turn to accelerate the downstream portion of said file of cartridges toward said magazine outlet every time said breech casing moves rearwardly and acts through said cam on said lever, and a pawl pivoted on said casing for preventing rearward motion of said ratchet wheel when it is released by the first mentioned pawl.

2. A combination according to claim 1 further including means for holding at will said pawls out of contact with said ratchet wheel.

3. A combination according to claim 1 further including a yieldingly locking toothed wheel rigid and coaxial with said control toothed wheels, a pawl movably carried by said casing and means for constantly urging said pawl against said locking toothed wheel.

4. In combination with an automatic firearm mounted on a support and including a breech casing reciprocable with respect to said support and a breech block reciprocable in said breech casing, a cartridge magazine adapted to be removably secured to said support and including a casing having an outlet located along the path of reciprocation of said breech block, means in said casing for guiding a file of cartridges toward said outlet, a main feed mechanism carried by said casing for constantly urging the last cartridge of said file toward said outlet, a supplementary feed mechanism comprising two coaxial toothed wheels journalled in said casing along the path of said file and close to said outlet to engage the cartridges as they are nearing said outlet and to accelerate the portion of the file downstream of said wheels, a cam carried by said breech casing, a member movably carried by said casing arranged to run on said cam during a portion of the reciprocating movement of said breech casing, a torsion bar, means interconnecting one end of said torsion bar with said movable member, means connecting the other end of said torsion bar with said toothed wheels whereby upon rearward movement of said breech casing the member carried by the casing is moved by engagement with the cam and twists the torsion bar which imparts an accelerating movement to the cartridges.

References Cited in the file of this patent

UNITED STATES PATENTS

1,413,694	Vollmer	Apr. 25, 1922
2,596,293	Schalkli	May 13, 1952
2,697,381	Maillard	Dec. 21, 1954

FOREIGN PATENTS

495,449	Belgium	Oct. 30, 1950