July 3, 1956 W. E. JOHNSON 2,753,185

STATISTICAL MACHINES

Filed July 30, 1953

FIG. 1.

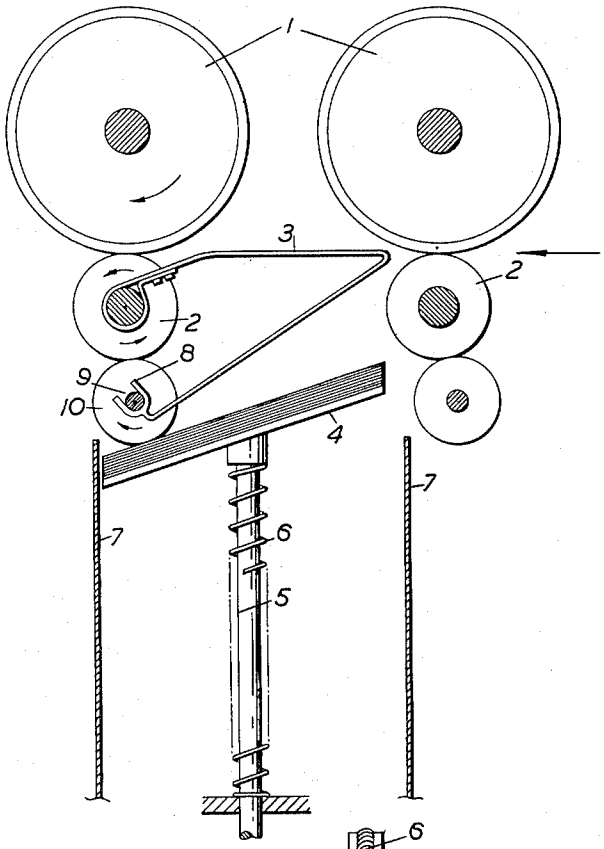


FIG. 2.

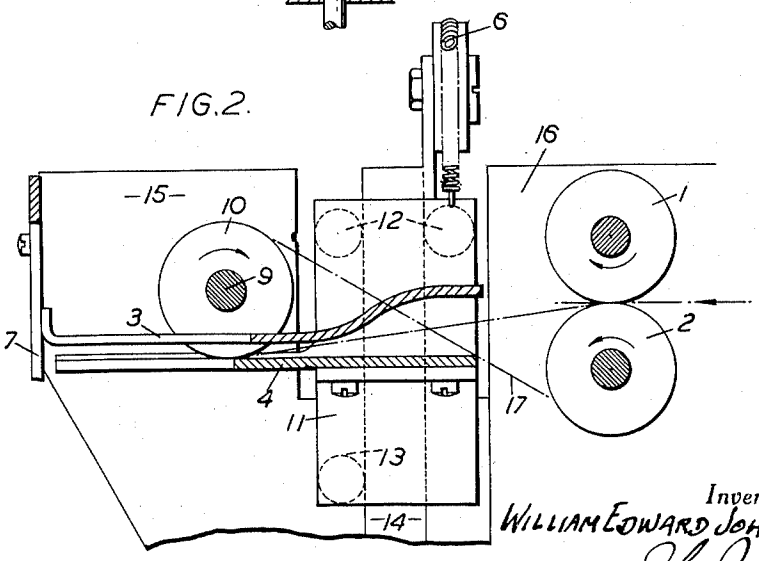


Inventor
WILLIAM EDWARD JOHNSON
By John Ewing
Attorney

United States Patent Office

2,753,185

Patented July 3, 1956

1

2,753,185

# STATISTICAL MACHINES

William Edward Johnson, London, England, assignor to Powers-Samas Accounting Machines Limited, London, England, a British company

Application July 30, 1953, Serial No. 371,346

Claims priority, application Great Britain September 29, 1952

3 Claims. (Cl. 271—87)

This invention relates to statistical machines and in particular to apparatus for delivering record cards from such a machine.

In statistical machines for sorting statistical record cards, or otherwise operating under the control of such cards, the cards as they issue from the machine are usually fed to the position of delivery by a pair of rotatable feeding rollers which co-operate to move a card into engagement with a deflector arranged to direct the leading edge of the card downwards towards a support therefor, the support being spring-urged towards the deflector and movable away therefrom under the weight of cards delivered thereto, and a stop is provided against which the leading edge of a card impinges to arrest the forward movement of the card.

In all such machines, as is well understood in the art, the cards are delivered from the machine in an order or sequence which it is desired to maintain but when, as in sorting machines, and some other forms of statistical machines, the cards are delivered in succession at a high rate it has been found that cards have a tendency, on impinging against the stop, to bounce backwards from the stop and, due to the high rate of card delivery, it sometimes happens that cards become interleaved and are thus not stacked on the support in the desired order or sequence.

Further, it is found that in some machines the cards during their passage through the machine acquire static electricity which sometimes causes them to stick to the feeding rollers which should deliver them on to the support and this may cause card jamming or mal-delivery.

It is one object of the present invention to provide apparatus for delivering record cards from a statistical machine in a manner such that the movement of a card issuing from the feeding rollers is controlled up to the instant of engagement of the leading edge of the card with the stop.

It is a further object of the invention to provide that in addition to the control just mentioned the card is further controlled until the delivery of the next card from the feeding rollers.

According to the present invention there is provided apparatus for delivering record cards from a statistical machine and including a pair of rotatable feed rollers co-operating to move a card into engagement with a deflector arranged to direct the leading end of the card downwards towards a support therefor, the support being spring-urged towards the deflector and on receipt of a card thereon being movable away from the deflector by a distance equal to the thickness of the card, and a stop engageable by the leading edges of the card to align it relative to the support, characterised in that a card-controlling element is disposed between the feed rollers and the stop to engage a card issuing from between the feed rollers positively to move the leading edge thereof into engagement with the stop and to restrain the card against movement thereof away from the stop and support.

In a preferred embodiment of the invention the card

2

controlling-element comprises a continuously rotatable roller and if desired, the roller may be rotated by co-operation with one roller of a pair of feed rollers succeeding the pair by which the card is moved into engagement with the deflector.

In order that the invention may be clearly understood two embodiments thereof will now be described, by way of example, with reference to the accompanying diagrammatic drawings, in which:

Fig. 1 illustrates apparatus according to the invention as applied to a sorting machine for statistical record cards, and

Fig. 2 illustrates apparatus according to the invention as applied to a record card controlled statistical machine from which all cards issue into a single receiver.

In the drawings similar reference numerals indicate like or similar parts.

Referring to Fig. 1, pairs of rotatable rollers 1, 2 co-operate to move record cards into engagement with deflectors 3, only one of which is shown, arranged to direct the leading end of a card downwards towards a support 4 carried on an axially movable stem 5, the support being urged towards the deflector by a spring 6.

As mentioned above, the embodiment of the invention now being described is applied to a card sorting machine and, as is well understood in the art, such machines comprise a plurality of card receivers to which cards are delivered at a high rate. Each receiver, as is customary, has a support 4 and deflector 3 the latter being controlled by card sensing apparatus, not shown, through timing mechanism forming no part of the present invention, so that the appropriate one of the deflectors 3 is, at the appropriate time, moved so that the downwardly inclined portion thereof is interposed into the card path so that a card is engaged thereby and is directed downwards towards the support 4. As is well understood the deflectors preceding and succeeding that which is interposed in the manner just mentioned are so disposed that a card passing from the sensing apparatus is fed by the feed rollers over the horizontal portions of the deflectors preceding that having its downwardly inclined portion interposed into the path of the card.

In the apparatus illustrated in Fig. 1 the upper feed rollers 1 are positively rotated by any suitable means, not shown, and the lower rollers 2 are rotated by frictional engagement between the peripheries thereof and the peripheries of the upper rollers 1 which latter preferably are fitted with rubber tyres.

Co-operating with each support 4, as is customary is a stop plate 7 which is to be engaged by the leading edge of a card to align the card relative to the support 4 which is inclined downwards towards the stop. As can be seen from Fig. 1, the downwardly inclined portion of the deflector 3 is provided with a forked end 8 which supports a spindle 9 about which a roller 10 having a continuous peripheral surface concentric with its axis is freely rotatable. The roller 10, is, as can be seen from Fig. 1, disposed between the right-hand pair of feed rollers 1, 2 which co-operate with the deflector 3 to deliver a card on to the support 4, and the stop plate 7 and forms a card-controlling element arranged to engage a card issuing from between the said right-hand pair of rollers 1, 2 positively to move the leading edge of the card into engagement with the stop 7. This is effected by reason of the spring 6, through the support 4 and any cards supported thereby, pressing the roller 10 against the roller 2 of the pair at the left as viewed in Fig. 1 so that the roller 10 is rotated by frictional engagement with the said left-hand roller 2. The position of roller 10 is such that a card issuing from the right-hand pair of rollers 1, 2 is engaged by the roller 10 which presses it against the support, or against the top card of the support, and the

forwardly moving card is moved positively by the roller **10** until its leading edge is arrested by the stop **7**. Since the roller **10** maintains its engagement with the card until the next card is delivered by the feed rollers the first card is retained by the roller **10** against stop **7** and is restrained from rebounding therefrom and, as the card is pressed downwards by the roller **10** the next card must be delivered on top of it.

In the embodiment of the invention illustrated in Fig. 2 cards are delivered in succession from the last set of pairs of feed rollers **1**, **2** on to a support **4** carried on a carriage **11** provided with upper rollers **12** and lower rollers **13** which engage rails **14**, one at each end of the carriage, whereby the support is guided for vertical movement. The support is urged towards a deflector **3** by springs **6** and a fixed stop plate **7** is provided for engagement by the leading edge of the card being positioned on the support.

A pair of rollers **10**, only one of which is shown in the drawing, are spaced apart along the axis of the spindle **9** which in this instance is supported for rotation in brackets **15** secured to the frames **16** of the machine, the rollers **10** being secured to the spindle **9** for rotation therewith. In this embodiment of the invention the lower rollers **2** of the pairs of feed rollers are those which are positively driven from the main drive of the machine, the rollers **1** being frictionally rotated by the rollers **2**. The spindle **9** has pulleys, not shown, secured thereto and belts **17** connect these pulleys with other pulleys secured to the shaft to which the rollers **2** of the last set thereof are secured.

From Fig. 2 it will be seen that, as was the case with the apparatus illustrated in Fig. 1, the roller **10** is disposed between the feed rollers and the stop and, in the manner described above, positively moves a card against the stop, retains it in engagement therewith, and serves to prevent rebounding of the card away from the stop. Apparatus as shown in the drawing is designed to avoid difficulties which may arise if the cards, due to their having acquired a charge of static electricity during their passage through the machine, have a tendency to adhere to the last pair of feed rollers. Thus, as described above, the rollers **10** are so disposed between the stop **7** and the last pair of feed rollers **1**, **2** as to engage a card issuing from the feed rollers and draw it therefrom thereby to ensure that the cards are delivered one on the other in the order in which they are received by the last pair of feed rollers for delivery on to the support **4**.



I claim:

1. Apparatus for delivering record cards from a statistical machine at high speed, comprising a support to receive the cards, a deflector arranged to direct the leading end of a card downwards towards the support, a spring urging the support towards the deflector, a pair of rotatable feed rollers co-operating to move a card towards said deflector for movement towards the support, a stop engageable by the leading edge of the card to align it relative to the support, and a rotatable element disposed between the feed rollers and stop to engage a card delivered from the rollers and to press the card against said support, characterised in that the rotary element comprises a continuously rotatable roller located in advance of the feed rollers a distance less than the length of a card and having a continuous peripheral surface concentric with its axis of rotation and mounted in driven relationship with the feed rollers to be driven at the same peripheral speed as that of the feed rollers and so disposed relatively to said feed rollers, said stop, and said support or to the uppermost card on the support as to engage a card issuing from the feed rollers but with the trailing edge of said card still being engaged by the delivery rolls and thereafter maintain continuous engagement with the card until it engages the next card issuing from the feed rollers thereby positively to move the leading edge of each card into engagement with said stop and restrain it against movement away from the stop and the support.

2. Apparatus according to claim 1, wherein said continuously rotatable roller is rotated by co-operation with one roller of a pair of feed rollers succeeding the pair by which the card is moved into engagement with the deflector.

3. Apparatus according to claim 2, including supporting means carried by said deflector to support said continously rotatable roller for rotation by frictional engagement with one feed roller of said succeeding pair of feed rollers.


**References Cited** in the file of this patent

UNITED STATES PATENTS

| | | |
|---|---|---|
| 1,287,142 | Trew | Dec. 10, 1918 |
| 1,333,193 | Trew | Mar. 9, 1920 |
| 1,375,241 | Trew | Apr. 19, 1921 |
| 1,485,861 | Lasker | Mar. 4, 1924 |
| 1,717,858 | Thomas | June 18, 1929 |
| 2,540,971 | Wagner | Feb. 6, 1951 |