April 24, 1956 F. FERRARI 2,743,052

RECIPROCATING AIR-COMPRESSOR ACTUATED BY A DOUBLE-VIBRATION VIBRATOR FOR ALTERNATING CURRENT

Filed July 14, 1953 2 Sheets-Sheet 1

Fig.1

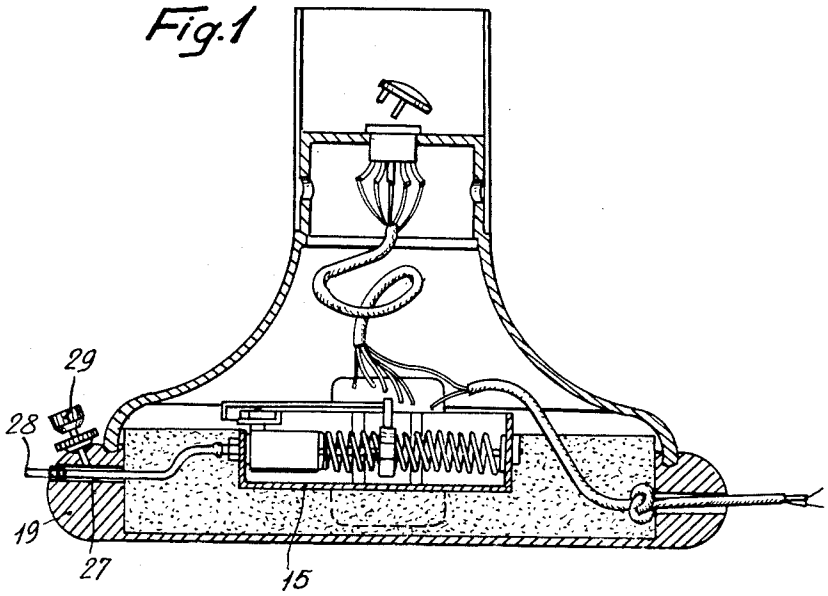

Fig.2

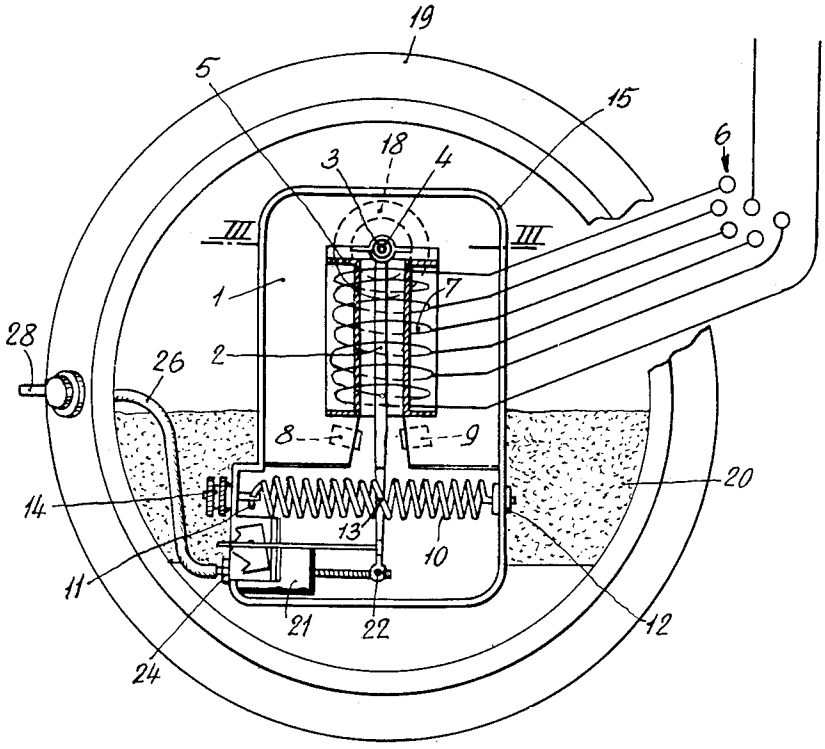

Fig. 3

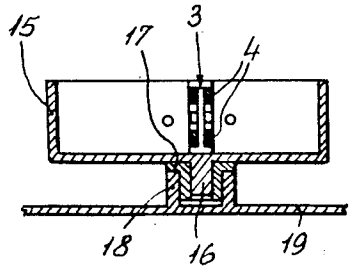

Fig. 4

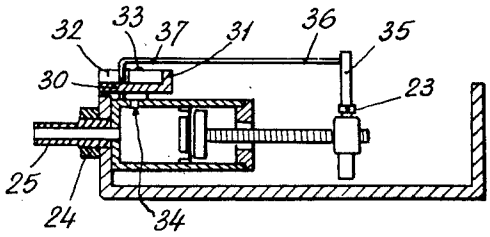

Fig. 5

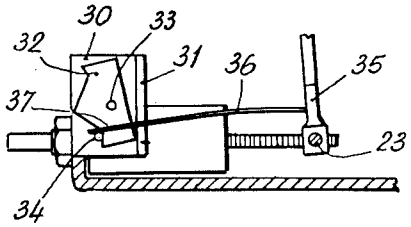

Fig. 6

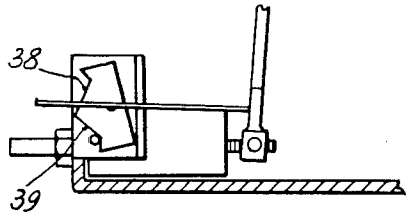

Fig. 7

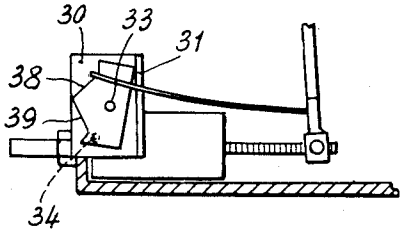

United States Patent Office

2,743,052

Patented Apr. 24, 1956

1

2,743,052

RECIPROCATING AIR-COMPRESSOR ACTUATED BY A DOUBLE-VIBRATION VIBRATOR FOR ALTERNATING CURRENT

Francesco Ferrari, Milan, Italy, assignor to Etablissements Vitoux, Troyes, France

Application July 14, 1953, Serial No. 367,965

Claims priority, application Italy July 28, 1952

9 Claims. (Cl. 230—55)

This invention relates to a reciprocating vibro-compressor, that is to a compressor the piston of which is actuated by a vibration electric motor.

An important object of my invention is to provide an apparatus of the above mentioned character having an improved efficiency.

Another object of my invention is to provide means to lengthen the piston stroke of the compressor.

A further object of my invention is to provide an apparatus of the above mentioned character having a more silent working owing to an oscillating mounting of its case.

Other objects and advantages of the invention will be apparent during the course of the following description.

In the accompanying drawings forming a part of this specification, and in which like numerals are employed to designate like parts throughout the same:

Figs. 1 and 2 are respectively vertical and horizontal sections of said apparatus;

Fig. 3 is a section along III—III of Fig. 2;

Fig. 4 is a diagrammatic section of the pump, and

Figs. 5, 6, 7 illustrate a device, used for halving the frequency, shown in three positions.

Referring to said figures, **1** is a permanent magnet between the pole-shoes of which is arranged a mild steel vibrating member **2**, rotatably mounted at **3**. A rubber sleeve **4** is used for absorbing the secondary vibrations which would be generated in the case of a metallic contact.

A coil **5**, which is provided with a few terminals **6**, in order to work under different voltages, is fixedly mounted between the two legs of the magnet and its internal chamber **7** is large enough so that the vibrating member may freely oscillate in the whole width of said chamber without coming into contact with the coil.

In the pole-shoes of the electro-magnet **1** rubber rings **8** and **9** are pressed into respective holes in such a manner that they project outwardly enough to prevent the vibrating member **2** from striking the metal pole-shoes, in order to avoid a noisy working and the vibrating member excessively adhering to the electro-magnet.

A coil-spring **10** under an appropriate load is fixed at **11** and **12**, and attached at its medial portion, that is at **13**, to an extension made of a non-magnetic metal of the vibrating member. The load of this spring may be adjusted through a screw **14** provided with a check-nut. When turning the screw **14**, said spring **10** is relaxed or loaded in order to put the vibration period of the vibrating member and case as much as possible in unison with the period of the alternating current. In that way, the maximum power is obtained.

The spring **10** may freely turn about its axis with respect to the securing point **12** and the screw **14**. When the latter is turned, the point **13** of the spring **10**, where the vibrating member **2** is engaged, is displaced.

A more important function of the spring **10** is to make the vibrating member **2** oscillate with a true pendular motion. Would the spring have not existed, the vibrating member attracted by one of the poles would have its speed accelerated, said speed being maximum when the vibrating member is in contact with said pole. On the contrary, owing to the spring, the speed of the vibrating member is maximum half way of the two poles and is gradually reduced when the vibrating member is getting near the poles, because at that time half of the spring is loaded, the other half being relaxed. In that way the pendular motion may have a large amplitude and be perfectly silent.

2

The case **15** of the vibrator is provided with an axle **16** (Fig. 3) coaxial with the axis of oscillation **3** of the vibrating member **2**. This axle revolves in a rubber bearing **17**, the latter being mounted on a seat **18** formed by the casing **19**. Consequently the case **15** may freely oscillate about the axle **16** due to the reaction, and it is not able to receive any other motion than the normal vibrations, because a sponge rubber bearing plate **20** is arranged under the case, in such a manner that it partly covers the sides of said case and maintains it at its right place and centered with respect to the casing **19**.

The fact that the case freely oscillates about the axle **16** increases the efficiency of the vibrator; it also prevents the lateral vibrations from being transmitted to the casing **19** which contains the whole device, and consequently said casing remains perfectly motionless and silent.

A small pump **21**, which is shown in cross-sectional view in Fig. 2, has its piston linked to the end of the vibrating member **2** at **22**. A pressure screw **23** clamps the piston rod at the required point (Fig. 4). The pump cylinder is secured to the case by means of a nut **24** and a rubber tube **26** (Fig. 2) is connected to the small outlet tube **25** of the pump. The rubber tube enters a passage **27** in the casing **19** and a small metal tube **28** is driven through the rubber tube and forced into the passage **27**.

The pulsations of the air compressed by the small pump are collected by means of the outlet tube **28**. The intensity of the pulsations may be adjusted by means of a screw **29** with a check-nut. When the screw is tightened, it goes downwards and presses the rubber tube so that the internal section of its outlet varies.

It is obvious that the speeds of the piston and cylinder are inversely proportional to their respective masses, being understood that said masses comprise the masses of the other members which are integrally locked to the piston and cylinder.

This reaction vibro-compressor may be used for the most varied applications. For instance it may be used for repairing runs in stockings and other knitted fabrics. In that respect, the attached drawings show an apparatus, the cap of which has the shape of a cup in order to be introduced into a stocking to be mended. At the outlet **28** a rubber tube or a like is connected and linked to the pneumatic handle carrying the needle (not shown).

In case it is desired to have the frequency of the pulsations with respect to the motion of the vibrating member, it is possible to use the following device. An oscillating valve illustrated in Figures 4 to 7 opens every two strokes of the pump an outlet port at the bottom of the pump, and thus the compressed air is delivered outside instead of flowing into the tube **28**. This fast motion should be performed in the right time and consequently should be controlled by the basic vibration, that is the vibrator's vibration which does not vary.

For that object an obturating member or a valve **32**, pivoted at **33**, is mounted on the plane surface of a polished metal piece **30** provided with a bent portion **31**. The face of said valve in contact with the plane surface **30** is also polished and perfectly air-tight. The plane face **30** is provided with an outlet **34** which communicates with the inside of the pump cylinder. The end of the vibrating member **2** is provided with a lug **35** at which is secured a rectilinear spring **36** having its free end **37** bent at right angles.

When the vibrating member is working and pulled for instance to the right (coming from the left, see Fig. 6), the spring **36** following the travel of the vibrating member causes its own bent end to follow the inclined face **38** of the valve **32**. At a certain point the inclined face is ended and the spring **36** actuates the valve, causing it to rotate about its axle **33** until it meets the bent portion **31** acting as a step (see Fig. 7). At the same time the vibrating member ends its stroke to the right.

The port **34** remains obturated even when the vibrating member performs its return stroke to the left, while the piston compresses the air. As the spring **36** is no more loaded it withdraws and becomes straight again while it performs said return stroke and reaches the position of Fig. 6.

When the vibrating member performs again its stroke to the right as in the above mentioned step, it is no more the inclined face **38** which is met by the bent end **36**. This time the face **39** is in contact with said end, and the latter slides on face **39** and drives the valve into the position of Fig. 5, thus opening the port **34**. Consequently, during the return stroke the piston delivers the compressed air to the outside. The series of steps is performed again, and at the outlet **28** (Fig. 1) only one air pulsation for two strokes of the pump is obtained.

It is to be understood that the form of my invention herewith shown and described is to be taken as a preferred example of the same, and that various changes in the shape, size and arrangement of parts may be resorted to without departing from the spirit of the invention or the scope of the subjoined claims.

What I claim is:

1. In a vibrating type compressor, a casing, a case pivotably mounted within said casing, first resilient means connecting said case to said casing for resiliently positioning said case with respect to said casing, a cylinder rigid with said case, a solenoid rigidly arranged within said case, a vibrating member adapted to magnetically cooperate with said solenoid and pivotably mounted within said case coaxially with respect to the pivoting axis of said case in said casing, said case and said vibrating member being pivotably movable independently of each other, a piston adapted to reciprocate within said cylinder and operatively connected to said vibrating member, and second resilient means between said vibrating member and said case for resiliently positioning said vibrating member with respect to said case.

2. The compressor of claim 1 with said solenoid adapted to be energized with alternating current, wherein adjusting means are provided for adjusting said second resilient means in such a manner that the own vibration frequency of said vibrating member be equal to the frequency of the alternating current circulated through said solenoid.

3. The compressor of claim 2 wherein said adjusting means consist of a coil spring with at least one end thereof adjustably attached to the wall of said case and the middle point thereof operatively connected to said vibrating member.

4. The compressor of claim 1, wherein the pivotal mounting of said case in said casing include a trunnion rigid with said case and coaxial with the pivoting axis of said case with respect to said casing, a socket in said casing adapted to receive said trunnion of said case.

5. The compressor of claim 4, with a resilient bushing between said trunnion and said socket.

6. The compressor of claim 1 wherein said first resilient means consist of a plate of sponge rubber inserted between said case and said casing.

7. The compressor of claim 1 with an outlet port through the wall of said cylinder on the delivery side thereof, and obturating means adapted to obturate said port during every other working stroke of said piston.

8. The compressor of claim 1 with an outlet port through the wall of said cylinder on the delivery side thereof, and obturating means including a rocking valve adapted to obturate and clear said port by rocking movement of said valve, a rectilinear spring secured by one end thereof to said vibrating member and extending substantially through the pivoting axis of said rocking valve, two inclined faces on said rocking valve substantially symmetrical with respect to said rectilinear spring when said rocking valve lies in its middle position and adapted to cooperate with the other end of said rectilinear spring for ensuring rocking movement of said valve by said spring alternately on one side and on the other at each stroke of said vibrating member.

9. The compressor of claim 8, wherein said end of said rectilinear spring cooperating with said inclined faces of said rocking valve is bent at right angle to the length of said spring.

References Cited in the file of this patent

UNITED STATES PATENTS

1,602,054	Stewart	Oct. 5, 1926
1,801,419	Fortune	Apr. 21, 1931
2,287,203	Smith	Jan. 23, 1942
2,605,042	Reutter	July 29, 1952

FOREIGN PATENTS

59,493	Norway	Jan. 20, 1938