Feb. 22, 1955 S. J. KLEIN 2,702,663

NESTED CARTON BLANK

Filed April 16, 1952 3 Sheets-Sheet 1

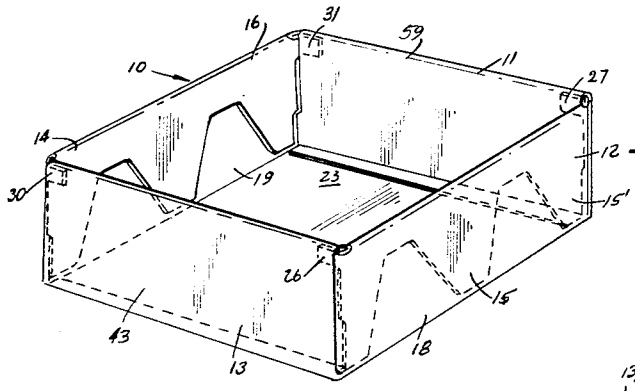

FIG. 1.

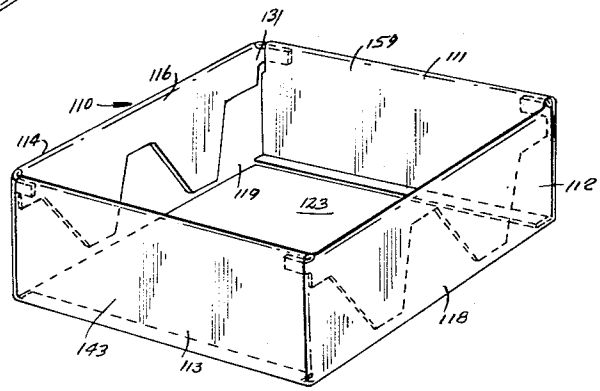

FIG. 2.

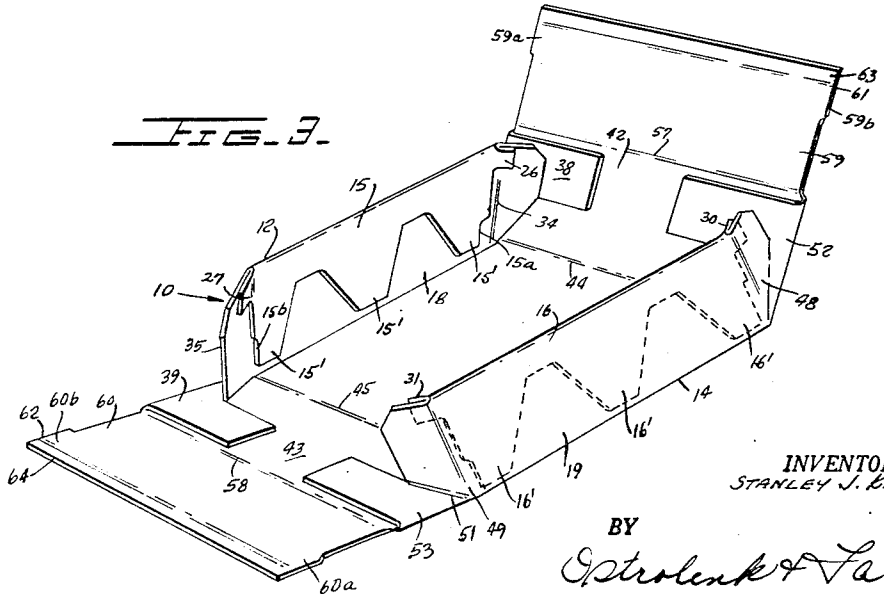

FIG. 3.

INVENTOR.
STANLEY J. KLEIN

BY
Ostrolenk & Faber
ATTORNEYS

NESTED CARTON BLANK

Filed April 16, 1952 3 Sheets-Sheet 2

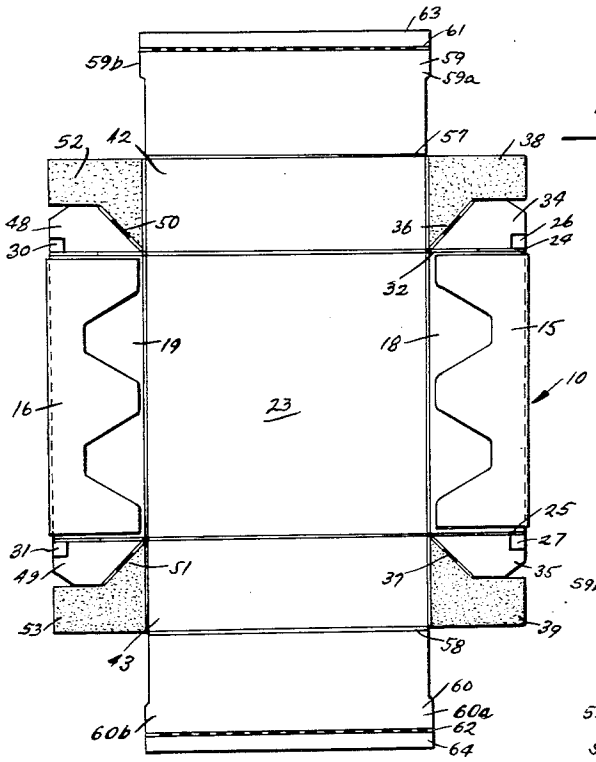

FIG. 4.

FIG. 5.

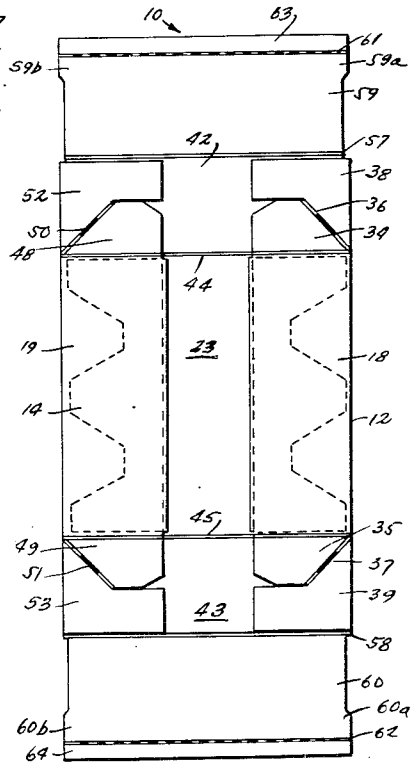

INVENTOR.
STANLEY J. KLEIN

BY

Ostrolenk & Faber

ATTORNEYS

Feb. 22, 1955 S. J. KLEIN 2,702,663

NESTED CARTON BLANK

Filed April 16, 1952 3 Sheets-Sheet 3

FIG. 6.

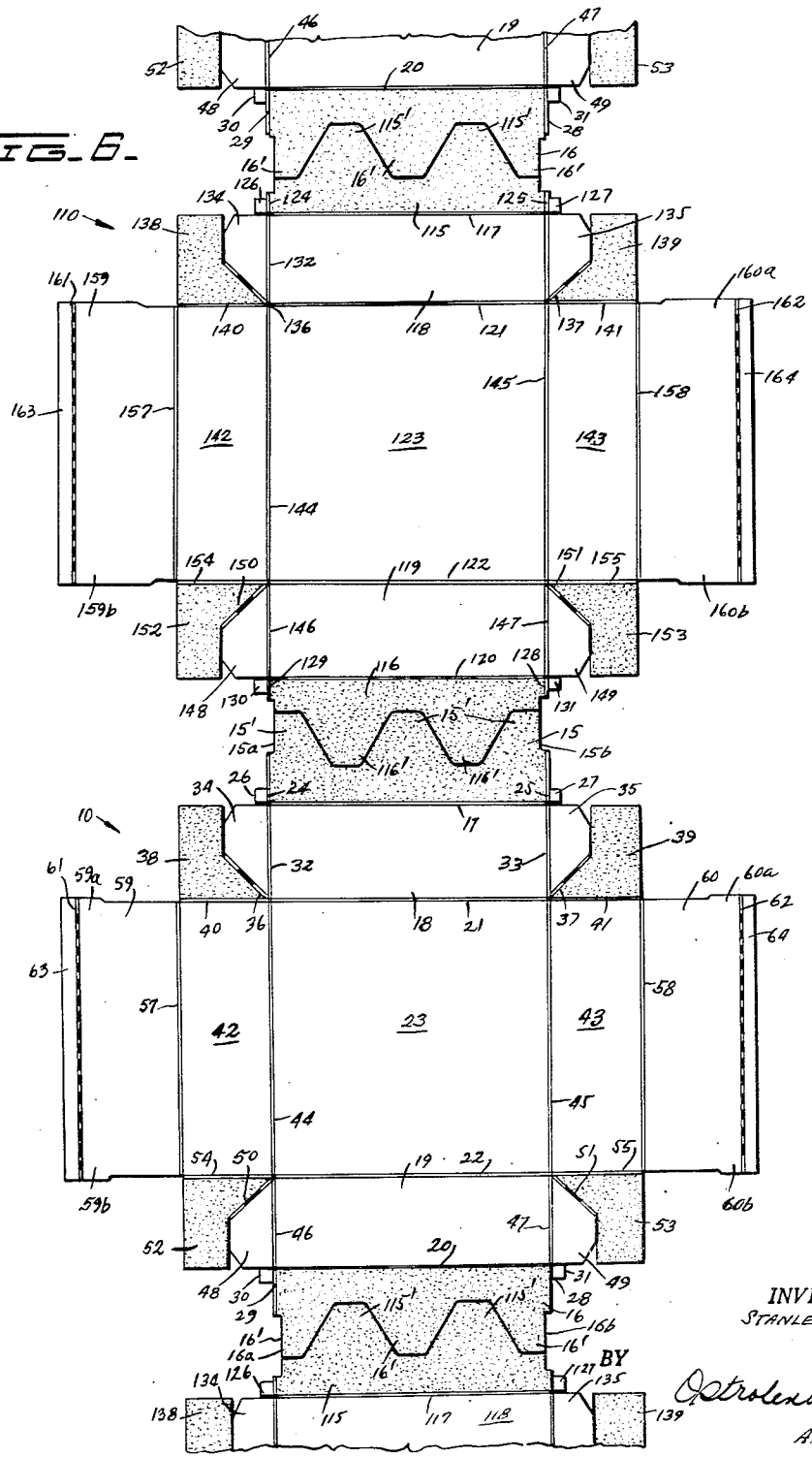

INVENTOR.
STANLEY J. KLEIN
BY
Ostrolenk & Faber
ATTORNEYS

United States Patent Office

2,702,663

Patented Feb. 22, 1955

1

2,702,663

NESTED CARTON BLANK

Stanley J. Klein, Englewood, N. J., assignor to Empire Box Corporation, Garfield, N. J., a corporation of New Jersey

Application April 16, 1952, Serial No. 282,526

1 Claim. (Cl. 229—31)

My present invention relates to double walled cartons and more particularly to novel double walled cartons particularly adapted to nesting.

Heretofore in the prior art double walled cartons have been made of highly flexible cardboard which of necessity must have its walls strengthened. The strengthening of the walls is obtained by doubling over the material so that each wall is essentially double the thickness of the blank, while the bottom is of single thickness. The resulting structure is fairly rigid and strong.

In the manufacture of the blanks, a continuous strip of flexible cardboard is utilized which is cut into the plurality of blanks by means of dies. This procedure of cutting from a long continuous piece of flexible material presents a great deal of wastage. The wastage occurs due to the spaces on the flexible cardboard material between the various blanks. It is evident that the smaller the spaces between the blanks the less wastage there is in the manufacturing processes and the cheaper is each unit blank. In considering the reduction of these wastage areas, it is important not to reduce the size of the blank in such a manner as to decrease the strength of the resulting erected carton. The double walls, therefore, must be retained.

This double problem of presenting a carton having double wall strength and having a minimum of wastage material has heretofore presented great difficulties.

My present invention overcomes the difficulties in the prior art by providing a pair of nested carton blanks wherein outer panels of opposite walls of the carton are saw-toothed to facilitate nesting. The toothed arrangement permits the blanks to nest so that when the blanks are cut, a single die element at one line will separate the two blanks at their adjoining edges without waste.

To provide the nesting of rows as well as the individual blanks in a single row, my present invention provides a double walled carton having one panel of one side wall saw-toothed with a plurality of teeth and one panel of the opposite side wall saw-toothed also with a plurality of teeth adapted to intermesh.

It is then a primary object of the present invention to provide a novel double walled carton, the blank of which is capable of being nested.

Still another important object of the present invention is the provision of two different double walled cartons, the blanks of which are sequentially nested.

Another important object of the present invention is the provision of a novel double walled carton, the manufacture of which causes a minimum of wastage.

Further objects and advantages will become apparent in considering the following description taken in conjunction with the figures wherein:

Figure 1 is a view in perspective of the novel double walled carton of the present invention.

Figure 2 is a view in perspective of another of my novel double walled cartons of my present invention.

Figure 3 is a view in perspective of a novel double walled carton partially opened.

Figure 4 is a top view of my double walled carton partially folded.

Figure 5 is a top view of my novel double walled carton folded one step further.

Figure 6 is a plan view of a row of nested blanks of my novel double walled carton.

Referring now to Figure 1, the novel nested carton **10** is shown having the side walls **11**, **12**, **13** and **14** and the bottom wall of base **23**. Each of the side walls **11** through **14**, as hereinafter described, is of double thickness having at least two panels.

2

The side walls **12** and **14** contain the saw-toothed panels **15** and **16**, shown more particularly in Figure 6 which is a plan view of the blank of the carton **10** as cut by the dies, not shown, from an original extensive sheet of flexible cardboard. Referring now particularly to Figure 6 the saw-toothed panel **15** is connected by fold line **17** to the rectangular panel **18**. The panels **15** and **18** together make up the side wall **12**, as shown in Figure 1. The side wall **14** is comprised of saw-toothed panel **16**, described above, and the rectangular panel **19** connected thereto along the fold line **20**.

Any number of meshing tooth elements may be used depending on the length of the carton and the tooth spacing required. In the following I show a carton of a length in which two teeth on one side and three teeth on the other side may be used. Also, as later described, the blank may be so arranged that an equal number of teeth may be used on each side.

The panels **15** and **16** have three teeth **15'** and **16'**, respectively. The teeth **15'** and **16'** provide nesting with adjacent blanks as is hereinafter described in reference to the blanks **10** and **100** shown in Figure 6. The rectangular panels **18** and **19** are connected along fold lines **21** and **22**, respectively, to the opposite sides of the square shaped panel **23** which is the bottom wall panel **23** as described above in reference to Figure 1.

The bottom wall panel or square panel **23** has connected thereto the rectangular panels **18** and **19** and also rectangular panels **42** and **43**. The panel **42** is connected to the bottom wall panel **23** along the fold line **44** and the panel **43** is connected to the bottom wall panel **23** along the fold line **45**. The fold lines **44** and **45** are on opposite sides of the bottom wall panel **23**. The bottom wall panel **23** is, therefore, connected to a rectangular panel along each of its sides. These panels are as described above the panels **18**, **43**, **19** and **42**.

The panels **42** and **43** are part of the side walls **11** and **13**, respectively, and the panels **18** and **19** are part of the side walls **12** and **14** described above in reference to Figure 1.

In addition to the foldable connection from one of the rectangular panels **18** and **19**, **42** or **43** to the other rectangular panels **18**, **19**, **42** or **43** through the bottom wall panel **23**, each of the rectangular panels **18**, **19**, **42** and **43** is foldably connected to its two adjacent rectangular panels through a corner connection. The panel **18**, for example, is foldably connected through the corner connection of panel **35** and tab **39** to the rectangular panel **43** and through the corner connection of panel **34** and tab **38** to the rectangular panel **42**.

The panel **18** is connected along the fold lines **32** and **33** which are essentially continuations of the fold lines **44** and **45**, hereinafter described, to the connecting panels **34** and **35** respectively. The panels **34** and **35** are connected along the diagonal fold lines **36** and **37** to the connecting tabs **38** and **39** which are in turn connected along fold lines **40** and **41** to the rectangular panels **42** and **43** respectively.

The panel **19**, described above, has connected thereto along the fold lines **46** and **47** the connecting panels **48** and **49** which are in turn connected along the diagonal fold lines **50** and **51** to the connecting tabs **52** and **53**. The connecting tabs **52** and **53** are connected along fold lines **54** and **55** to sides of the panels **42** and **43**, respectively, which are opposite the connecting tabs **38** and **39**, described above.

The panels **42** and **43** are connected along the fold lines **57** and **58** to the erecting panels **59** and **60**, which are hereinafter described. The erecting panels **59** and **60** have fold lines **61** and **62** to which are attached the locking panel strips **63** and **64**. The panels **59** and **60** are also part of the side walls **11** and **13**, respectively. The side wall **11** comprises the panels **59** and **42** in face to face relation and the side wall **13** comprises the panels **43** and **60** in face to face relation in the erected carton **10**.

The sawed-tooth panel **15** has connected on opposite sides thereof along fold lines **24** and **25**, the tabs **26** and **27** respectively. The tabs **26** and **27** are also shown in Figures 1, 3 and 4 and are provided to strengthen the

poses of preventing binding during the act of assembling. corners of the erected carton **10**, as is hereinafter described.

The saw-toothed panel **16** similarly has connected thereto along the fold lines **29** and **28** the tabs **30** and **31**, shown also in Figures 1, 3 and 4.

In the construction of the erected carton **10** from the blank as shown in Figure 6, panels **15** and **16** are folded in along the fold lines **17** and **20** respectively into face to face relationship with the rectangular panels **18** and **19**, and glued thereto as shown specifically in Figure 4. When the panels **15** and **16** are folded in, they carry therewith the tabs **26**, **27**, **30** and **31**. The tab **26** comes into face to face relationship with the connecting panel **34**; the tab **27** comes into face to face relationship with the connecting panel **35**; the tab **31** comes into face to face relationship with the connecting panel **49**; and the tab **30** comes into face to face relationship with the connecting panel **48**. None of the tabs **26**, **27**, **30** or **31** are glued in their respective face to face relation to connecting panels **34**, **35**, **48** or **49**.

After the panels **15** and **16** have been glued to the panel **18** and **19** respectively forming the side walls **12** and **14**, the walls **12** and **14** are folded in along the fold lines **21** and **22**, as shown more specifically in Figure 5.

When the walls **12** and **14** are folded in the connecting tabs **38**, **39**, **52** and **53** are brought into face to face relationship with the rectangular panels **42** and **43** as shown in Figure 3. The connecting tabs **38** and **52** are brought into face to face relation with the rectangular panel **42** and glued thereto and the connecting tabs **39** and **53** are brought into face to face relation with the rectangular panel **43** and glued thereto.

When the connecting tabs **38**, **52**, **39** and **53** are glued in position, the carton at this stage is shown in Figure 5 and is essentially a flat unit. There are no further gluing operations to be performed in completing the construction of the erected carton **10**, as shown in Figure 1. The construction, therefore, of the carton **10** is a simple and economical procedure having but two gluing operations; the first to glue the sawed-tooth panels **15** and **16** to the rectangular panels **18** and **19** respectively, and the second to glue the connecting tabs **38** and **52** to the rectangular panel **42** and the connecting tabs **39** and **53** to the rectangular panel **43**.

The carton **10** in this stage in the erection, being essentially flat as described above, can be easily stored, shipped or packed. In some instances, the panels **59** and **60** are folded in about the folding lines **57** and **58** and the carton **10** is stored, shipped or packed in that condition.

The next step after the final folding operation as described above in the erection of the carton **10** is the erection of the side walls **12** and **14**. The side walls **12** and **14** are moved toward a vertical position as shown in Figure 3. When the side walls **12** and **14** are moved toward this vertical position, the rectangular panels **42** and **43** are moved therewith to an oblique plane due to the glued connecting tabs **38**, **39**, **52** and **53** which connect through the connecting panels **34**, **35**, **48** and **49** respectively to the panels **42** and **43**.

As the side walls **12** and **14** are erected and the panels **42** and **43** move up therewith, the panels **59** and **60** are folded in about the folding lines **57** and **58** into the space opened between the side walls **12** and **14**. The panel **60** is folded over the tabs **27** and **31** and the panel **59** is folded over the tabs **26** and **30** until they are also approximately in a vertical plane. The erecting panels **59** and **60** and the respective locking panel strips **63** and **64** are so shaped, as is hereinafter described, as to be locked in position against the sawed-tooth panels **15** and **16**, described above, when the panels **59** and **60** are folded over into a vertical plane.

The panel **59** is extended at **59A** and **59B** to a length slightly in excess of the remainder of the panel **59** as shown in Figures 3 to 6. Similarly, the panel **60** is extended at **60A** and **60B** to a length slightly in excess of the remainder of panel **60**. The strips **63** and **64** are of a length equal to the extended lengths of the panels **59** and **60**, including the portions **59A**, **59B**, **60A** and **60B**.

The extensions **59A**, **59B**, **60A** and **60B** are short locking extensions as is hereinafter described. When the panels **59** and **60** are folded over in the final step in constructing the erected carton **10**, as shown in Figures 1 and 3, the extended portions **59A**, **59B**, **60A** and **60B** lock with the ends of the sawed-tooth panels **15** and **16**. The sawed-tooth panel **15** has the portion **15A** and **15B** removed or notched from the two external teeth **15'**. As the teeth **15'**, as well as the remainder of the panel **15**, are glued to the panel **18** and thus immovable with respect thereto, the insertion of the extension **59A** behind the notch **15A** and the extension **60A** behind the notch **15B** maintains the panel **59** in its vertical position. At the same time, the strips **63** and **64** are bent outwardly about the fold lines **61** and **62**, when the panels **59** and **60** are folding inwardly, locking beneath the bottom of the teeth **15'**, as shown more particularly in Figure 1.

Similarly, as the panels **59** and **60** are folded into their vertical erected position, the extensions **59B** and **60B** are locked behind the notches **16A** and **16B** of the two external teeth **16'**, respectively and strips **63** and **64** are locked beneath the teeth **16'**.

The resulting erected carton **10** is locked in the open or erected position and can be collapsed by pulling inwardly on the strips **63** and **64** to force the extensions **59A**, **59B**, **60A** and **60B** from behind the locked position with the teeth **15'** and **16'**.

The particular construction of the sawed-tooth panels **15** and **16** provides for nesting with a differently constructed carton **110** shown in plan form in Figure 6 and in its erected form in Figure 2. The carton **110** is essentially the same as the carton **10** and its corresponding parts have been numbered in a similar manner with the addition of 100 to each reference number. The difference between the carton **110** and the carton **10** is in its sawed-tooth panels **115** and **116** and its locking or erecting panels **159** and **160**.

The panels **115** and **116** each have two teeth **115'** and **116'** respectively. The teeth **115'** and **116'** provide nesting with the teeth **15'** and **16'** of the adjacent blanks **10** described above as shown in Figure 6.

The slopes of the sides of the teeth **115'** and **116'** are so constructed that a single cutting edge will provide the shaping for the teeth **115'** and **16'** and another single cutting edge will provide the shaping of the teeth **15'** and **116'**.

Thus, the blanks **10** and **110** are sequentially nested in a row of blanks.

The erecting panel **160** has the extended edges **160A** and **160B** which perform the locking behind the outside cut edges of the teeth **115'** and **116'**. The extended portions **160A** and **160B** are long extensions as contrasted with the short extensions, **60A** and **60B** described above in reference to the blank **10**.

The extensions **160A** and **160B** are long extensions in order to lock behind the outside cut portions of the teeth **116'** and **115'** which are close to the rectangular panels **118** and **119**.

Similarly the erecting panel **159** has the long extensions **159A** and **159B** to complete the locking of the erected carton.

The two blanks **10** and **110** can then be sequentially nested along the row providing blanks having a simple method of construction. The two cartons **10** and **110**, in order to nest, are provided with either three teeth or two teeth. The carton **10**, provided with three teeth, required a short extension on its erecting panels **59** and **60** to perform the locking and the carton **110**, having two teeth, requires long extensions on its erecting panels **159** and **160** to perform the locking.

In the foregoing, I have described my invention in relation to specific embodiments thereof. Since further modifications will now become apparent to those skilled in the art, I wish to be limited only by the following claim.

I claim:

A plurality of nested blanks for double walled cartons each comprising a central square shaped bottom wall panel; a first, second, third and fourth rectangular panel each foldably connected to one side of said bottom wall panel; a first saw-toothed panel foldably connected to said first rectangular panel; a second saw-toothed panel foldably connected to said third rectangular panel; a first erecting panel foldably connected to said second rectangular panel, a second erecting panel foldably connected to said fourth rectangular panel, a first of said blanks having said first and second saw-toothed panels comprising an even number of teeth and a pair of locking notches and said first and second erecting panels of said first blank comprising a pair of long extensions, a second of said blanks having said first and second saw-toothed panels comprising an odd number of teeth and

a pair of locking notches, and said first and second erecting panels of said second blank comprising a pair of short extensions, said even number of teeth of said first blank nesting with said odd number of teeth of said second blank, said long extensions of said first and second erecting panels of said first blank being adapted to mate with said locking notches of said first and second saw-toothed panels of said first blank, said short extensions of said first and second erecting panels of said second blank being adapted to mate with said notches of said first and second saw-toothed panels of said second blank.

References Cited in the file of this patent

UNITED STATES PATENTS

546,767	Knobeloch	Sept. 24, 1895
1,936,608	Schmidt	Nov. 28, 1933
2,214,813	Guyer	Sept. 17, 1940
2,334,425	Lowey	Nov. 16, 1943
2,429,540	Woodruff	Oct. 21, 1947
2,527,702	Buttery	Oct. 31, 1950