Nov. 16, 1954 A. B. SPYUT 2,694,273

METHOD OF TIPLESS SEALING OF VITREOUS ENVELOPES

Filed June 20, 1951

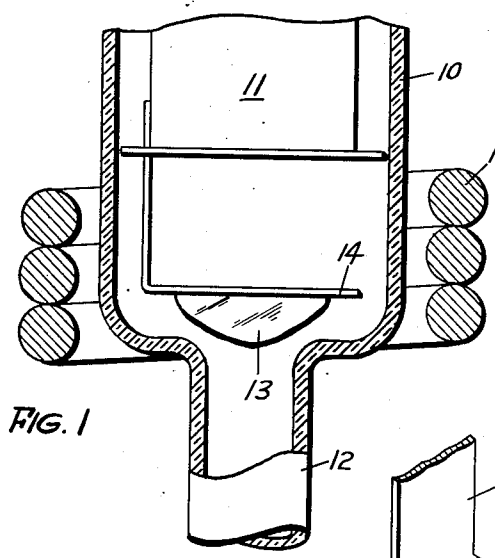

FIG. 1

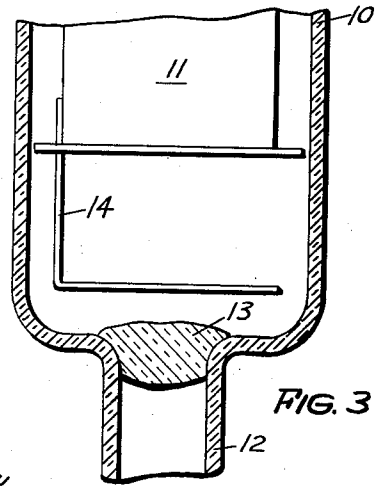

FIG. 3

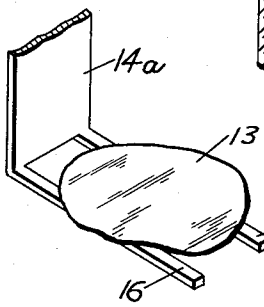

FIG. 2

FIG. 4

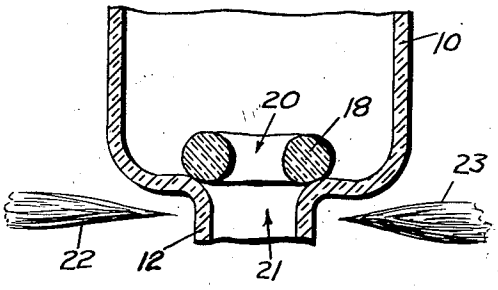

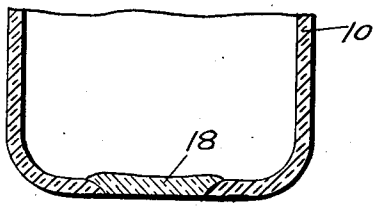

FIG. 6

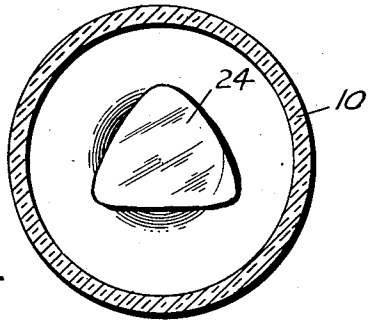

FIG. 5

INVENTOR
ALBERT B. SPYUT
BY Elmer J. Gorn
ATTORNEY

United States Patent Office

2,694,273

Patented Nov. 16, 1954

1

2,694,273

METHOD OF TIPLESS SEALING OF VITREOUS ENVELOPES

Albert B. Spyut, Waltham, Mass., assignor to Raytheon Manufacturing Company, Newton, Mass., a corporation of Delaware

Application June 20, 1951, Serial No. 232,557

2 Claims. (Cl. 49—78)

This invention relates to methods of and apparatus for sealing glass envelopes, such as those for miniature and sub-miniature vacuum tubes, without leaving a tip.

The blanks for some types of miniature and subminiature tubes are formed with an exhaust tubulation that serves to support the envelope and connect it to the pumping system of the processing machine during processing. After final exhaust, the exhaust tubulation is sealed off by the application of heat near the junction of the tubulation with the envelope. The glass of the envelope is usually of a type having a high melting point. In heating such a "hard" glass to its melting point in the sealing operation the mount structure is also heated. The result may be the emission of gases from the materials of the mount to contaminate the high vacuum of the envelope, and possibly to poison the cathode and to corrode other elements of the tube structure. It would thus be advantageous if the envelope could be sealed without the use of a high enough temperature to produce these undesirable effects.

By present methods of sealing, a tip is formed that protrudes from the envelope at the point where the seal is made. This increases the length of the envelope to no useful purpose, and increases the chances of breakage. It is thus apparent that a method of sealing such envelopes that would not leave a tip would be advantageous.

By the present invention, the envelope is sealed at low temperatures and without leaving an undesirable tip. This is accomplished by supporting a piece of low melting point glass within the envelope in such a position that when it is heated it flows into the opening from the envelope to the exhaust tubulation to form a vacuum tight seal that may be cut off without leaving a tip.

Other and further advantages of this invention will be apparent as the description thereof progresses, reference being had to the accompanying drawings, wherein:

Fig. 1 is an enlarged side elevation partially in section and partially broken away of a preferred embodiment of the invention showing an envelope in processing position before sealing;

Fig. 2 is a detailed isometric view of a part of a modified support for the sealing glass;

Fig. 3 is a vertical section of the envelope shown in Fig. 1 after sealing;

Fig. 4 is an enlarged view in a vertical section of an envelope showing another method of applying the soft sealing glass;

Fig. 5 is a horizontal section view of an envelope in processing position showing another method of applying the sealing glass; and

Fig. 6 is a vertical section of a sealed and finished envelope partially broken away.

In Fig. 1, the reference numeral **10** represents the envelope to be sealed by the method of the invention. A mount **11** is supported in the envelope **10**. There is an exhaust tubulation **12** extending from the bottom of the envelope **10** for the purpose of supporting the envelope during processing and of connecting the envelope to the vacuum system of the processing equipment. A lump of soft or low melting point glass **13** is fastened to the under side of a bracket **14** attached to the mount **11**. This lump of glass **13** may be firmly affixed on the bracket **14** by heating either the glass, or the bracket, or both, and affixing the piece of glass **13** to the bracket **14**. The mount **11** is then inserted in the envelope **10** in the usual manner and the assembly is subjected to the usual processing. When the stage in the processing is reached at which the envelope is to be sealed off, an

2

inductive heating coil **15** is positioned about the envelope **10** and arranged to heat only the bracket **14**. When the bracket **14** heats, it transmits its heat to the glass lump **13** which softens and falls down into the opening from the envelope **10** into the exhaust tubulation **12** to form a seal for the exhaust opening, as shown in Fig. 3.

The bracket **14***a*, as shown in Fig. 2, may also be formed with two prongs **16** and **17** to support the piece of soft glass. When the support is heated by induction from the coil **15**, the softened glass **13** falls between the prongs **16** and **17** into the opening in the exhaust tubulation **12** to form a seal as before.

If the lump of soft glass is given a special form so as not to interfere with the flow of gases into the exhaust tubulation **12**, the glass may be rested on the bottom of the envelope **10**, and the bracket **14** of Figs. 1 and 3 may be dispensed with. Appropriate shapes for the glass for this purpose are shown in Figs. 4 and 5. In Fig. 4, the glass is shaped like a doughnut **18** and rests on the bottom of the envelope **10** with its opening **20** positioned directly over the opening **21** into the exhaust tubulation **12**. Heat is then applied to this glass doughnut **18** and the envelope **10** at its junction with the tubulation **11**, preferably by gas jets **22** and **23**. As the doughnut melts, it falls into the opening **21** to seal it, as shown in Fig. 6. The exhaust tubulation can then be cut off flush with the end of the envelope **10**, as shown in Fig. 6, to form a tipless seal.

An irregularly-shaped piece of glass, such as the triangularly-shaped piece **24** shown in Fig. 5, may be positioned over the opening **21** so that the gases may flow about its edges into the exhaust tube **12**. Such a piece, like the doughnut **18**, is then heated by open flames, such as the jets **22** and **23** of Fig. 4, or any other convenient heating source, and as before, the lump **24** forms a seal **18** in the exhaust opening **21**.

The precise shape of the piece of soft glass is not important. It suffices that it be of such shape that when it is positioned over the opening **21** there is sufficient remaining space for exhausting the gases into the exhaust tubulation **12**.

This invention is not limited to the particular details of construction, materials and processes described, as many equivalents will suggest themselves to those skilled in the art. It is accordingly desired that the appended claims be given a broad interpretation commensurate with the scope of the invention within the art.

What is claimed is:

1. A method of sealing an envelope having a mount and formed with an exhaust tubulation, comprising the steps of positioning a piece of vitreous material of a lower melting point than the material of the envelope within the envelope above the tubulation upon a bracket attached to the mount, and heating the said piece of low melting point material until said material drops into the entrance to the exhaust tubulation to form a sealing plug therein.

2. A method of sealing an envelope formed with an exhaust tubulation, comprising the steps of positioning upon a support a piece of vitreous material of a lower melting point than the material of the envelope within the envelope above the tubulation, and heating the said piece of low melting point material by applying induction heating to said support until said material drops into the entrance to the exhaust tubulation to form a sealing plug therein.

References Cited in the file of this patent

UNITED STATES PATENTS

Number	Name	Date
1,861,167	Vello	May 31, 1932
1,911,410	Valverde	May 30, 1933
2,093,567	McCullough	Sept. 21, 1937
2,202,337	Cohn	May 28, 1940
2,219,891	Geiger et al.	Oct. 29, 1940
2,351,128	Jeffery	June 13, 1944
2,426,990	Ellefson	Sept. 9, 1947
2,473,860	Cartun	June 21, 1949
2,479,032	Thibieroz	Aug. 16, 1949
2,666,545	Hopfield	Jan. 19, 1954