July 20, 1954 R. D. GRAHAM ET AL 2,684,089

PEELING AND INCISING MACHINE FOR WOOD OR LIKE MATERIALS

Filed Feb. 23, 1950

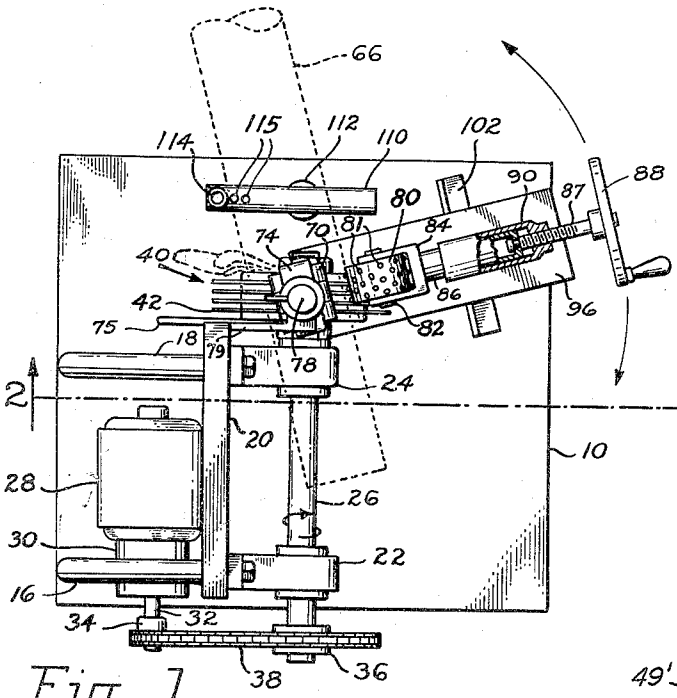

Fig. 1.

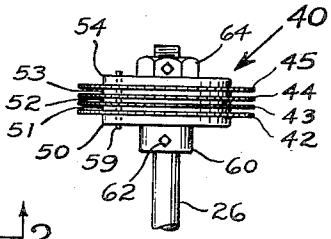

Fig. 3.

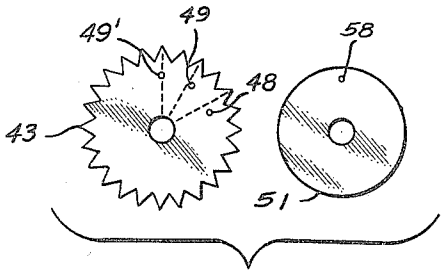

Fig. 4.

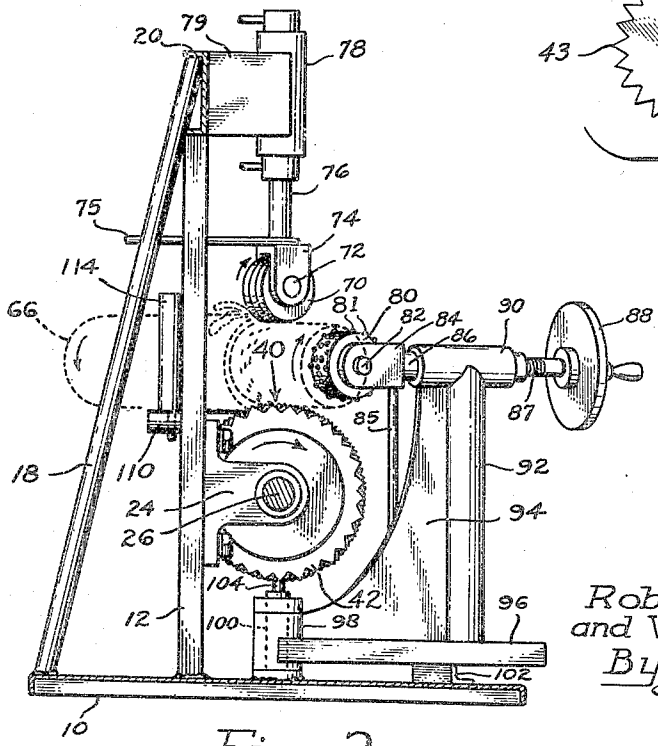

Fig. 2.

Inventors
Robert D. Graham
and Wiley T. Stockett Jr.
By Eugene D. Farley
Atty.

Patented July 20, 1954 2,684,089

UNITED STATES PATENT OFFICE

2,684,089

PEELING AND INCISING MACHINE FOR WOOD OR LIKE MATERIALS

Robert D. Graham, Corvallis, Oreg., and Wiley T. Stockett, Jr., Mesa, Ariz.; said Graham assignor to the State of Oregon, acting by and through the Oregon State Board of Forestry

Application February 23, 1950, Serial No. 145,742

10 Claims. (Cl. 144—1)

1

The present invention relates to a machine for incising wood and like materials. It relates particularly to a machine for incising poles and timbers prior to impregnating them with a preservative material.

It is a primary object of the present invention to provide an incising head which is adaptable for use with incising machines of varying types and construction.

It is another important object of the present invention to provide an incising machine which will apply to the object to be incised a pattern of incisions which is variable with respect to their lateral and longitudinal spacing, thereby adapting the machine to use upon wood objects of varying species or upon wood objects to be treated by different preservative processes.

Still another object of the present invention is the provisions of an incising machine for use particularly on wood poles, which debarks the poles prior to incising them, thereby insuring incision to a maximum depth into the wood.

It is another object of the present invention to provide an incising machine which is readily adjustable to accommodate objects of varying cross section, or having surface irregularities thereon.

Another object of the present invention is the provision of an incising machine which may be applied either as a driving unit or as a follower.

It is another object of the present invention to provide an incising head having associated therewith means for determining and varying the depth of the incisions made by the head.

Another object of the present invention is the provision of an incising machine of simple and inexpensive construction which is adapted for continuous operation.

The manner in which the foregoing and other objects of the present invention are accomplished will be apparent from the accompanying specification and claims, considered together with the drawings, wherein:

Figure 1 is a plan view of the incising machine of the present invention in one of its embodiments;

Figure 2 is a view in elevation of the incising machine of Figure 1 taken along the lines 2, 2 of Figure 1;

Figure 3 is a detail view of an incising head for use in the incising machine of the present invention; and

Figure 4 is a detail view illustrating elements of the incising head of Figure 3.

Referring now to the drawings, the incising machine of the present invention is supported on

2

a base 10 to which are attached the standards 12 reenforced by bracing bars 16, 18. The standards are interconnected by means of a structural member such as the channel beam 20. Bolted to the standards are bearings 22, 24 in which is journalled the shaft 26. This shaft is driven by motor 28 through gear reduction train 30, shaft 32, sprocket 34 keyed to shaft 32, sprocket 36 keyed to shaft 26, and chain 38 interconnecting the two sprockets.

The incising head indicated generally at 40 is rigidly secured to the shaft 26 at the end opposite the sprocket 36. As is indicated particularly in Figures 3 and 4, this head comprises broadly a plurality of substantially circular incising blades 42–45, inclusive, having spaced incising teeth on the peripheries thereof. The incising blades may be of any desired dimensions and may be used in suitable numbers, preferably about 4. They are provided with teeth of suitable design, such as, for example, teeth of the oyster knife, chisel point, or saw tooth types. Each of the incising blades is perforated centrally so that it may be slipped over the shaft 26.

In addition, each is provided with a plurality of transverse perforations 48, 49, 49'. These are progressively offset with reference to the teeth, by which is meant that they are progressively further removed from the radial lines interconnecting the center of the blade and the apices of the teeth (Figure 4). As will appear more fully hereinafter, these perforations make possible the setting of the blades in a plurality of positions with reference to each other. Where there are three transverse perforations spaced apart by a distance such that the offsetting increments total the distance between the centers of adjacent teeth, three different relative positions of the incising blades is possible. When there are five such perforations, there may be five different positions of the blades and so on. As a result, the teeth in the respective incising blades may be spaced longitudinally from each other by selected distances to furnish a desired incising pattern.

Associated with the incising blades are a plurality of spacers 50 to 54, inclusive. These may be disc shaped elements adapted to be interposed between the incising blades and to maintain the blades a spaced distance laterally from each other. They therefore may be provided in a plurality of sets, the members of each set having a given thickness. In this manner, the lateral spacing of the incisions may be adjusted as desired. Alternatively, a desirable lateral spacing for some applications, such as the incising of lum-

ber, may be obtained by omitting the spacer elements altogether and using an increased number of incising blades having a decreased number of teeth per blade.

It will be apparent that, where the diameter of the spacing elements is such that they overlap the teeth on the incising blades, the peripheral surfaces of the spacing elements will act as shoulders, engaging the wood during the incising operation. When these surfaces are close to the points of the teeth, the incisions will be shallow. When they are near the bottom of the teeth, the incisions will be correspondingly deep. When they are entirely below the teeth, the maximum depth of penetration will be determined by the size of the teeth. By providing a number of sets of spacing elements of different diameters, the construction of the incising head may easily be varied to provide heads which will incise to any predetermined depth. In this manner, there is provided an incising head which is easily and rapidly assembled but which is flexible in its construction to meet various incising requirements.

As in the case of the incising blades, the spacers are centrally perforated and are adapted to slip over the shaft **26** alternately with the incising blades. Also, they are provided with transverse perforations **58** which are registrable with the perforations **48**, **49**, **49'** of the incising blades. When selected ones of the perforations are in registry, they are adapted to receive a pin **59** by means of which the incising blades are positioned relative to each other to form an incising head assembly having the teeth offset by the desired amount.

To attach the incising head to the shaft **26**, the inner spacer **50** may be rigidly secured to the collar **60** which, in turn, may be rigidly affixed to the shaft by means of the set screw **62**. Then abutting the outer spacer **54**, there may be provided the nut **64** which may be turned on the threaded end of the shaft, the direction of the threads being such that the nut is tightened by the rotation of the shaft. This clamps together the incising blades and spacers and prevents their displacement.

Cooperating with the incising head **40** in incising an object such as the pole **66** is a pressure element or pressure roll **70**. This, preferably, is stationed above and diametrically opposite the incising head. It may comprise a single roll of suitable width, or a plurality of rolls separated by washers and rotatably mounted on a common shaft **72**. The width of the pressure roll preferably is sufficient so that it extends beyond the incising head on the infeed side of the machine. Also, the exposed edges of the roll preferably are sharp and act as cutters and scrapers to remove ahead of the incising head the bark from a pole when the latter is the subject of the incising operation. Hence it is preferred to incise the poles while they are green, since in this condition they are more readily debarked. Furthermore, if incised green, they season more rapidly and fewer checks and cracks develop during seasoning.

Suitable means are supplied for maintaining the pressure roll firmly in contact with the object being incised. Such means may comprise a fluid operated cylinder, such as an hydraulic cylinder or an air cylinder. The latter is preferred since its use is attended by the advantage that it has a cushioning action which compensates for irregularities on the surface of the object being incised. Also, the magnitude of the pressure applied to the pressure roll is easily adjustable by varying the air pressure supplied to the cylinder.

The shaft **72** on which the pressure roll is mounted may be journalled in a cross head **74** having attached thereto a lever arm **75**. The cross head, in turn, may be attached to the piston rod **76** of the air cylinder **78**, and the latter may be attached to the frame of the machine at a suitable elevation by means of the bracket **79**.

It will be apparent that the pressure applied by the pressure roll is determinative in part of the depth of the incisions made. In general, this pressure should be sufficient to insure incising uniformly to the maximum depth permitted by the incising head assembly. Where wood is the subject of the incising operation, pressures of between about 10 and about 120 pounds per square inch are adequate, the higher pressures being used when the bark has not been removed from the wood.

Also associated with the incising head **40** is the positioning member or positioning roll **80** which preferably has on its periphery a number of bark-loosening projections **81**. The positioning roll is adapted to engage the object to be incised intermediate the pressure roll and the incising head. It serves the threefold function of stabilizing the object during its travel through the machine, of directing the angle of its travel with reference to the incising head, and of loosening the bark thereon. Directing the angle of travel is important in determining the flexibility of the machine since it makes possible incising the object either longitudinally or spirally in spirals of any desired tightness. Where the object to be incised is fed into the machine in a direction parallel to the plane of the incising head, a straight row of incisions will be made along the length of the object. This is desirable where a flat object such as a board or timber is to be incised. However, when it is desired to incise a substantially round object such as a pole, it may be introduced into the machine at an angle to the plane of the incising head and fed spirally through the machine. Where the feed angle approaches parallelism with the plane of the head, a loose spiral pattern of incisions is obtained. On the other hand, as the angle approaches normality to the plane of the incising head, a correspondingly tighter spiral pattern of incisions is made.

To enable control of the direction of feed in the manner indicated above, the positioning roll **80** is mounted rotatably on a shaft **82** journalled in the clevis **84**. A lever **85** is attached rigidly to the clevis, thereby enabling its rotation and making possible alignment of the positioning roll with the spiral travel of the object being incised as it goes through the machine.

The clevis is attached to the shaft **86** which is coupled with the screw **87** and attached crank **88**. The screw is threaded into the housing **90**, thus providing means for advancing and retracting the positioning roll with respect to the object to be incised. This makes possible adjusting the machine to accommodate objects of varying cross section.

The housing **90** is mounted upon a turntable which may comprise a standard **92** with strengthening gusset plate **94**. The standard, in turn, is mounted on the platform **96** which is attached pivotally through the bearing **98** to the post **100**. A track or foot **102** is provided for supporting the platform **96** and for making pos-

sible its free rotation about the post 100. Post 100 preferably carries fingers 104 extending upwardly between the incising blades and adapted to remove adherent bark and wood fragments therefrom.

There also is provided a pole support comprising a support bar 110 mounted as a cross bar upon the standard 112 and having the upwardly extending guide arm 114 attached through one of the openings 115 in the cross bar, so as to be laterally adjustable. The support serves not only to bear part of the weight of the log, but also to cooperate with the positioning roll 80 in fixing the angle at which the post traverses the machine, and the spiral patterns of the incisions. This is because when the incising head rotates counterclockwise, for example, as viewed in the drawings, one side of the object to be incised will be forced against the positioning roll. This will tend to throw the far end of the object in the opposite direction, where it will abut against the arm 114 and be held securely in place in the desired path. This result is obtained furthermore while permitting certain deviations in travel as necessitated by surface irregularities and sweep in the object. As such irregularities appear, the object is free to shift its position momentarily to accommodate them, returning immediately to the desired path after the irregularities have passed by.

To operate the above described embodiment of the incising machine of the present invention, the end of the pole or other object to be incised may be placed on the upper surface of the incising head. The pressure roll 70 then is placed in firm engagement with the opposite side of the pole by operation of the air cylinder 78. Next by turning crank 88, the positioning roll 80 is placed in engagement with the post, and the turntable assembly supporting the positionng roll turned until it is set at the desired feed angle.

Next the pressure roll 70 is aligned with the post by rotating the piston rod 76, using the lever 75 for this adjustment. Also, the positioning roll 80 is aligned with the rotary path of travel of the post, i. e. with the spiral course which it follows, by adjustment of the lever arm 85. Next the motor 28 is started, thus driving the shaft 26 with attached incising head 40. The teeth on the latter then engage and penetrate the post, incising it and contemporaneously drawing it through the machine. During this process, the cutting edges on the pressure roll 70 cut and scrape off any bark which may be present on the post, the projections 81 on the positioning roll 80 cooperating by loosening the bark and facilitating its removal. In this manner, the pole may be incised at a rate determined by the speed of the motor and the angle of feed, and at the same time debarked so that the incisions are made effectively in the wood substance of the pole.

During this operation, the weight of the post is supported in part by the support member 110 and the incising head 40. Vertical displacement of the post is prevented by the force applied through the pressure roll 70. Horizontal displacement of the post is prevented in one direction by the positioning roll 80 and in the other direction by the arm 114. This arrangement of the supporting and guiding elements of the device permits accurate feeding of the pole at any desired angle with respect to the incising head. However, the pole is not rigidly restrained and is free to move to compensate for irregularities. This lends a substantial flexibility to the device.

Although the presently described incising machine has been described and illustrated in the embodiment in which the incising head is powered and used to drive the object to be incised through the machine, it will be apparent to one skilled in the art that the power may be applied from an external source, the incising head acting as a follower. Hence the instant machine is well suited for use as an attachment to a conventional pole shaver in which poles are shaved to free them from bark and surface irregularities prior to treatment with preservatives. In this application it may be used either as a follower, or as part of the driving mechanism. Thus by the present invention there are provided an incising head and incising machine which are versatile and flexible in operation. By their use, objects may be incised with any desired pattern of incisions, the pattern being variable both as to the lateral and longitudinal spacing between the incisions. The depth of the latter also may be controlled. As a result the incised object may be treated most efficiently with a preservative or other chemical agent, the treatment being uniform and designed to meet the requirements of the particular object.

In addition, the machine is adaptable for use upon objects of irregular outline and, when the object is a post or pole, it serves to debark it contemporaneously with the incising operation, thereby eliminating this as a preliminary step and insuring incising uniformly to the maximum depth permitted by the incising head. As applied particularly to substantially round objects, the staggered pattern of incisions which may be formed permits subsequent chemical treating of the object with maximum efficiency but without impairing the strength of the object as, for example, by cutting or tearing the fibers of a wood pole at close intervals. Still further, the incising machine of my invention is of simple, inexpensive construction and adapted for continuous use either as a powered device or associated with powered apparatus such as a pole shaver.

Having now described the invention in preferred embodiments, we claim:

1. An incising machine comprising a rotary incising head, a pressure roll above and diametrically opposed to the incising head and adapted to maintain an elongated object thereagainst under substantial pressure, a turntable and a positioning element mounted on the turntable and adapted to engage the object, and to position it at a predetermined but variable angle with respect to the incising head.

2. An incising machine comprising a rotary incising head, a pressure roll above and diametrically opposed to the incising head and adapted to maintain an elongated object thereagainst under substantial pressure, a turntable, a positioning element mounted on the turntable, and adapted to engage the object, and to position it at a predetermined but variable angle with respect to the incising head, and screw means operatively connected to the positioning element for advancing and retracting the same with respect to the object to be incised, thereby adapting the machine for use upon objects of varying cross section.

3. A pole incising machine comprising a rotary incising head, a pressure roll adapted to hold the pole against the incising head under pressure, the pressure roll being provided with cutting

edges adapted to peel the bark from the pole ahead of the incising head, and a positioning roll for positioning the pole at a predetermined angle with respect to the incising head, the positioning roll having on the periphery thereof a plurality of projections adapted to loosen the bark on the pole thereby facilitating its removal by the pressure roll.

4. The incising machine of claim 1 wherein the incising head comprises a shaft, mounted on the shaft a plurality of incising blades having on the margins thereof a plurality of spaced teeth, and means for adjustably interconnecting the incising blades with the teeth in a selected one of a plurality of relative positions, thereby determining the pattern of the incisions made by the teeth.

5. The incising machine of claim 1 wherein the incising head comprises a shaft, mounted on the shaft a plurality of substantially circular incising blades having on the peripheries thereof a plurality of spaced teeth, each of the incising blades having a plurality of transverse perforations therethrough, the perforations being progressively offset with respect to the teeth on the blades, and a pin adapted to be received in a selected perforation in each of the blades, thereby interconnecting the blades and determining the pattern of the incisions.

6. The incising machine of claim 1 wherein the incising head comprises a shaft, mounted on the shaft a plurality of incising blades having on the margins thereof a plurality of spaced incising teeth, spacing elements disposed one between each of the incising blades and dimensioned to determine the lateral spacing of the incisions and the depth thereof, and means for adjustably interconnecting the incising blades and the spacing elements with the teeth on the blades in a selected on of a plurality of relative positions, thereby determining the longitudinal spacing of the incisions.

7. The incising machine of claim 1 wherein the incising head comprises a shaft, mounted on the shaft a plurality of substantially circular blades having on the peripheries thereof a plurality of spaced teeth, substantially disc shaped spacing elements disposed one between each of the incising blades and dimensioned to determine the lateral spacing of the incisions as well as the depth thereof, the incising blades and the spacing elements having therethrough a plurality of registering perforations progressively offset with reference to the teeth on the incising blades, and a pin adapted to be received in a selected group of registering perforations in the blades and spacing elements, thereby interconnecting the blades and determining the longitudinal spacing of the incisions.

8. A pole incising machine comprising a rotary incising head, power means connected to the incising head for driving the same, thereby advancing the pole through the machine while contemporaneously incising it, a pressure roll substantially diametrically opposite the incising head and adapted to maintain the pole thereagainst under substantial pressure, a turntable stationed adjacent the incising head and pressure roll, and a positioning roll mounted on the turntable and adapted to engage the pole and to position it at a predetermined but variable angle with respect to the incising head.

9. A pole incising machine comprising a rotary incising head, a pressure roll stationed substantially opposite the incising head and adapted to press the pole thereagainst, a fluid operated cylinder connected to the pressure roll for maintaining the same pressing against the pole, a turntable stationed adjacent the incising head and pressure roll, and a positioning roll mounted on the turntable and adapted to engage the pole and to position it at a predetermined but variable angle with respect to the incising head.

10. The incising machine of claim 9 wherein the fluid operated cylinder is an air cylinder providing a cushion for accommodating objects to be incised of varying cross-section while maintaining them under positive pressure against the incising head.

References **Cited** in the file of this patent

UNITED STATES PATENTS

Number	Name	Date
201,938	Nickerson	Apr. 2, 1878
346,681	Perry	Aug. 3, 1886
1,075,907	Dunton	Oct. 14, 1913
1,346,126	Howe	July 13, 1920
1,349,967	Korff	Aug. 17, 1920
1,373,243	Hellstrom	Mar. 29, 1921
1,433,077	Hansen	Oct. 24, 1922
1,468,484	Lynch	Sept. 18, 1923
1,533,547	Hathaway	Apr. 14, 1925
1,622,538	Nelson	Mar. 29, 1927
1,665,764	York	Apr. 10, 1928
1,667,063	Valentine	Apr. 24, 1928
2,340,532	Jackson	Feb. 1, 1944
2,341,640	Mehlhorn	Feb. 15, 1944
2,390,459	Power	Dec. 4, 1945
2,423,363	Biro	July 1, 1947
2,534,671	Haumann	Dec. 19, 1950
2,563,758	Tinling	Aug. 7, 1951